Volume III
Surface Production Operations

Surface Production Operations

Facility Piping and Pipeline Systems

Volume III

MAURICE STEWART
Principal, Stewart Training and Consulting LLC, McLean, Virginia, USA

ELSEVIER

AMSTERDAM • BOSTON • HEIDELBERG • LONDON
NEW YORK • OXFORD • PARIS • SAN DIEGO
SAN FRANCISCO • SINGAPORE • SYDNEY • TOKYO
Gulf Professional Publishing is an imprint of Elsevier

Gulf Professional Publishing is an imprint of Elsevier
225 Wyman Street, Waltham, MA 02451, USA
The Boulevard, Langford Lane, Kidlington, Oxford, OX5 1GB, UK

Copyright © 2016 Elsevier Inc. All rights reserved.

No part of this publication may be reproduced or transmitted in any form or by any means, electronic or mechanical, including photocopying, recording, or any information storage and retrieval system, without permission in writing from the publisher. Details on how to seek permission, further information about the Publisher's permissions policies and our arrangements with organizations such as the Copyright Clearance Center and the Copyright Licensing Agency, can be found at our website: www.elsevier.com/permissions.

This book and the individual contributions contained in it are protected under copyright by the Publisher (other than as may be noted herein).

Notices

Knowledge and best practice in this field are constantly changing. As new research and experience broaden our understanding, changes in research methods, professional practices, or medical treatment may become necessary.

Practitioners and researchers must always rely on their own experience and knowledge in evaluating and using any information, methods, compounds, or experiments described herein. In using such information or methods they should be mindful of their own safety and the safety of others, including parties for whom they have a professional responsibility.

To the fullest extent of the law, neither the Publisher nor the authors, contributors, or editors, assume any liability for any injury and/or damage to persons or property as a matter of products liability, negligence or otherwise, or from any use or operation of any methods, products, instructions, or ideas contained in the material herein.

Library of Congress Cataloging-in-Publication Data
A catalog record for this book is available from the Library of Congress

British Library Cataloguing in Publication Data
A catalogue record for this book is available from the British Library

ISBN: 978-1-85617-808-2

For information on all Gulf Professional publications visit our website at http://store.elsevier.com/

ELSEVIER
Book Aid International
Working together to grow libraries in developing countries
www.elsevier.com • www.bookaid.org

Dedicated to my wife Dyah,
my son Chad,
and in memory of my parents Maurice and Bessie Stewart.

Preface

When I was a young engineer, I was often confronted with a problem that was new to me. I would often ask senior engineers or supervisors for advice on how to solve the problem and they would advise me to "check Project ABC" or they would go to a "hidden" folder in a locked drawer and pull out a detailed calculation. Often I would dig through stacks of files or drawings or go through calculations only to find that the problems I had were not the same, or what they had imagined as an existing solution was not applicable. Nothing was on paper that could be applied to the problem at hand. These sort of problems applied not only to piping design but also to all aspects of facilities engineering.

As a teacher of facility piping and pipeline systems, I spent a lot of time looking for answers in reference materials, only to discover that many texts were silent on the topic under investigation. I realized that there is no single source that could be used as a text in this field. Thus, I was forced to reproduce pages from catalogs, reports, and projects that I had done to provide students with the basic information they needed to understand the lecturers and carry out their assignments. More importantly, the material that did exist usually contained nomographs, charts, and rules of thumb that did not refer to the basic theories and underlying assumptions upon which they were based. Although *Volume 3* builds upon the information that was presented in *Surface Production Operations, Volume 1: Design of Oil-Handling Systems and Facilities* and *Volume 2: Design of Gas-Handling Systems and Facilities*, it does present the basic concepts and techniques necessary to select, specify, size, construct, operate, and repair facility piping and onshore and offshore pipeline systems.

For many years, I wanted to compile my thoughts about piping design into an organized textbook. I tried to organize this text in a logical manner and make the information readable and easy to access. This text is intended to be "practical" guide on the design of facility piping and pipeline systems. It is not intended to be a "one-stop" comprehensive text discussing every aspect of process piping or pipeline engineering. I tried to highlight the items a facility engineer will most likely encounter, rather than to attempt to write an encyclopedic volume. For example, there is much information in ASME B31.3; I have only touched on the portions the designer might encounter in a "typical" facility piping job. Throughout the preparation of the text, I tried to strike a balance between theory and application. Examples are distributed throughout the text to enhance the principles covered.

The text is divided into three parts:

The first of which is devoted almost entirely to piping standards, codes, and recommended practices; materials of construction; piping system components, fittings, valves, and appurtenances; engineering drawings, data sheets, and symbols; fluid flow and pressure drop determination; choosing a line size and wall thickness; relief, vent, and flare disposal

systems; piping system design layout, supports, piping vessels, and equipment; and piping expansion and flexibility.

The second part deals with onshore pipeline systems, pressure testing and nondestructive examination, pipeline pigging, and pipeline operations.

The third part consists of technical data included in the appendix.

Throughout this text, I have attempted to concentrate on what I perceive to be modern and common practices. I have been personally been involved in the design, selection, construction, and repair of facility piping and pipeline systems throughout the world, or have people in my organization who have done so. Undoubtedly, I am influenced by my own experience and prejudices. I apologize if I left something out or have expressed opinions about certain equipment or procedures that differ from your own. I have learned much from my students' comments about such matters and would appreciate receiving your input for future revisions/editions.

Maurice I. Stewart Jr. PE PhD
McLean, VA, USA

Acknowledgments

This book is essentially the summary of the knowledge accumulated by the author through 40 plus years of practice as a facilities engineer in the upstream oil and gas industry. I would like to take this opportunity to express my appreciation and gratitude to my many friends, colleagues, and mentors for providing invaluable learning opportunities.

I would thank **Ken E. Arnold, PE**, the senior coauthor of the first two volumes of *Surface Production Operations* series. Much of the information in Volume 3 was originally contained in Volumes 1 and 2. Ken is also responsible for encouraging me to teach 2-day courses for the Society of Petroleum Engineers on *Surface Production Operations*, which, in turn, lead to the first two volumes of the series. Without Ken's expert contributions, *Volumes 1 and 2* would not have been possible.

I would like to thank **Stanton "Stan" Marsland, PE**, with SD Marsland & Partners Ltd, for his valuable input on Chapter 11—Pipeline Systems and Chapter 14—Pipeline Operations. Stan's knowledge and over 45 years working experience in all aspects on onshore and offshore pipelines throughout the world is second to none.

I want to thank **John Joseph Crump JD, PE** for his critique and input on Chapter 2—Piping Standards, Codes, and Recommended Practices and proofreading of Chapter 6—Fluid Flow and Pressure Drop and Chapter 7—Choosing a Line Size and Wall Thickness. John made sure all references to the various codes were correct and accurate. In addition, he often provided better ways on how to present materials in the manuscript.

I want to thank my international business partners and very close friends—**Jamin Djuang**, Managing Director of PT Loka Datamas Indah (LDI Training); **Chang Choon Kiang "CK,"** Managing Director of Professional Training Southeast Asia (PTSEA); and **Clement "Clem" Nwogbo**, Managing Director of Resource Plus. Together, for over 25 years, we have provided training to over 50,000 professionals in every oil-producing region of the world.

I also want to thank my colleagues on the numerous API Committees, in which I served as a committee member, with whom I have had many interesting discussions, and the thousands of students in the courses. I have taught that have, at times, asked difficult questions, that have greatly enriched this book. Without their valuable input, Volumes 1, 2, or 3 would not have been possible.

Last but certainly not least, I want to thank my good friend and colleague—**Heri Wibowo**, who not only prepared all illustrations, tables photos, and figures but also took my poorly typed raw manuscript and transformed it into a format suitable to submit to the publisher. Heri took loosely drawn sketches or concepts, often sketched on the back on a Starbuck's napkin or on the back of airline e-ticket, and transformed

them into a very detailed drawing illustrating the exact points I was trying to get across in the text.

I cannot conclude without thanking the numerous manufacturers and associations that offered the use of technical data, information, or artwork. I thanked them throughout the text when using their material but those deserving special thanks are:

- American Petroleum Institute
- American Society of Mechanical Engineers
- American Welding Society
- Apache Offshore
- Bonney Forge Corporation
- British Petroleum
- Charles Wheatley Company
- Chevron Worldwide
- C. Morris Company
- Crane Energy Flow Solutions
- Daniels Industries
- Dresser Industries
- Evertite Company
- ExxonMobil Worldwide
- Flexitalic
- Garloc Company
- Graylock Company
- Gruvagrip Company
- International Standards Organization (ISO)
- Jan de Nul
- Lamons Company
- Medco
- Pertimina
- Petroleum Authority of Thailand (PTTEP)
- Petronas
- Orbit, Inc.
- Rip Weaver
- Rockwell International
- SEMAC
- Shell Worldwide
- Smith-Blair Company
- Technip
- Total E&P Worldwide
- Tubular Exchanger Manufacturer's Association (TEMA)
- Victaulic Company
- Tube Turn
- Wellstream International
- WKM

My sincere apologies to anyone I may have overlooked.

Maurice I. Stewart Jr. PE PhD
Stewart Training and Consulting (STC), LLC

Overview of facility piping and pipeline systems

1

1.1 Overview

After wells are successfully drilled and completed, the fluid produced must be transported to a facility where it separated into oil, water, and gas; conditioned to meet process input requirements; treated to remove impurities such as H_2S, CO_2, H_2O, and solids; processed into specific end products, for example, NGL and LPG; measured; and refined or stored for eventual sales. Figure 1.1 is a simplified block diagram that illustrates the basic "wellhead to sales" concept. The diagram begins with wellhead choke which is used to control the rate of flow from each well. The fluid from the well travels through a *flowline* to the production facility where the fluid is separated, conditioned, treated, processed, measured, refined, or stored. Detailed discussions concerning oil, gas and water handling, conditioning, and processing facilities are covered in *Volumes 1 and 2*; pumps, compressors, and drivers are covered in *Volume 4*; and sizing, selecting, designing, installing, and operating process equipment-pressure vessels, heat exchangers, and storage tanks are covered in *Volume 5*.

Volume 1: Design of Oil-Handling Systems and Facilities and *Volume 2: Design of Gas-Handling Systems and Facilities* of the *Surface Production Operations* series present the basic concepts and techniques necessary to select, specify, size, operate, and troubleshoot oil, water and gas handling, conditioning, and processing facilities. *Volume 3: Facility Piping and Pipeline Systems* builds upon the information that is presented in *Volumes 1 and 2*.

Chapter 1 provides an introduction of piping design and projects, types and functions of facility and pipeline systems and facility design considerations. The Chapter also reviews a typical facility piping design project and reviews specific considerations related to offshore operations. Chapter 2 reviews piping standards, codes, and recommended practices for both facility piping and pipeline systems. This chapter discusses both ASME and other international piping standards. Chapter 3 reviews ASME Piping Code material requirements for ferrous, nonferrous, and plastic pipe. High- and low-temperature service material requirements and insulating materials are also discussed. Chapter 4 covers piping system components such as the various methods of connecting pipe, expansion joints and flexible piping, fittings, valves, valve specifications, and pressure ratings. Engineering drawings, data sheets, piping drafting symbols, and flow plan arrangement are discussed in Chapter 5. Chapter 6 discusses fluid flow and pressure drop determination, while Chapter 7 discusses the parameters that need to be considered when choosing a line size and code requirements when determining the wall thickness. Chapter 8 covers relief device selection, sizing, installation and relief, and vent and flare disposal system design. Facility piping system design, piping details, layout, supports, and vessel and piping equipment are covered in

Surface Production Operations. http://dx.doi.org/10.1016/B978-1-85617-808-2.00001-8
Copyright © 2016 Elsevier Inc. All rights reserved.

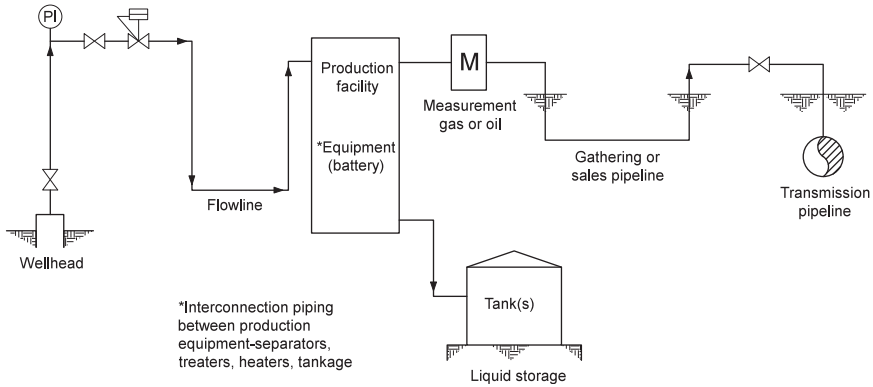

Figure 1.1 Block diagram of "wellhead to sales" concept.

Chapter 9. Chapter 10 discusses expansion piping and flexibility considerations. Chapter 11 reviews all phases of both onshore and offshore pipeline engineering, pipeline mechanical design, pipeline construction considerations, and unique offshore pipeline considerations. Chapter 12 discusses facility piping and pipeline system pressure testing and nondestruction examination requirements. Chapter 13 discusses reasons for pigging a pipeline, designing a pipeline for pigging, pig traps and pigging stations, pig types and uses, and in-line inspection tools. Pipeline operations, integrity assessment, and pipeline emergencies and repairs are covered in Chapter 14.

1.2 Introduction to piping design and projects

There are many commercial and industrial fluid handling applications conveying fluid from one location to another. At the outset, one must ask the following questions:

- What fluids must be conveyed?
  - Oil, water, gas, steam, air, N_2, and others
  - Are solids present?
  - What are the rates, pressures, temperatures, and viscosities?
- What do we want to do with the fluid?
  - Move from point A to point B
  - How far? What are the elevation differences/conditions?
- How will we do what? Construction
  - What "piping?" There is a broad spectrum of goods available.
    - What type of pipe is required?
      - Note: piping vs. tubing—standard vs. nonstandard sizes
        - Nominal pipe side (NPS) = pipe OD
        - Pipe ID varies with wall thickness
    - What valves and fittings are required?
    - Is pumping/compression required?
    - Is heating/cooling required?
    - What process equipment is needed?

- What materials, size, and thickness are required?
- What is the layout? How will the piping be supported?

Final design emerges from familiarity with piping and pipeline systems, equipment, instrumentation, plant design, and related disciplines.

1.2.1 What fluids are conveyed?

Produced fluids contain combinations of materials including hydrocarbon gases and liquids, water, and dissolved and/or entrained liquids and varying amounts of carbon dioxide (CO_2) and hydrogen sulfide (H_2S). Sometimes other gases are present as well, for example, N_2. Liquid hydrocarbons and some waters combine both physically and mechanically to form emulsions. Emulsions are more viscous than oil or water and, like foam, can present problems in process equipment.

Gas may be unprocessed or raw natural gas consisting primarily of methane (CH_4) with some heavier hydrocarbons. Process natural gas consists primarily of methane (CH_4) but may contain residual amounts of ethane plus (C_{2+}) components. Non-hydrocarbon components such as nitrogen (N_2), hydrogen sulfide (H_2S), and carbon dioxide (CO_2) may also be present.

Natural gas liquids (NGLs) consisting primarily of intermediate-molecular-weight hydrocarbons, such as C_3, C_4, C_5, and C_{7+}. after conditioning/separation may also exist. Condensed hydrocarbons are removed to ensure liquid-free vapor is sent to the gas sales pipeline, with BTU content controlled/monitored.

Oil consisting of heavier hydrocarbon fractions is generally a liquid at ambient conditions in atmospheric storage tanks. Volatile oil is stabilized to prevent excessive "weathering" or loss as vapor is released in storage or transport tanks. The piped fluid will remain a liquid with adequate operating pressure.

Produced well streams commonly include water and contain dissolved salts, minerals, and other solids classified as "basic sediment and water (BS&W)." Globally, produced water quality ranges from low "total dissolved solids (TDS)" to concentrated brines with specific gravities greater than 1.2 (much higher than seawater) relative to water. Water and BS&W are typically removed by separation or sedimentation in tanks. These products are substantially corrosive and/or erosive.

1.2.2 Fluid character

Gas streams are usually consist of C_1 through C_6 and C_{7+}. The fluid viscosity, density, gas compressibility, and phase behavior are required to predict fluid properties. Often company data and equations of state are used to predict the fluid properties. If a compositional analysis is not available, empirical "black oil" correlations are used to approximate the fluid properties. Correlations using API gravity, gas gravity, gas-oil ratios (GORs), and water-oil ratios (WORs) are used to approximate viscosity, density, phase behavior, and other properties. Chapter 6 provides a detailed discussion on how to determine these properties.

1.3 Types and functions of facility and pipeline systems

Once the type and character of the fluid that needs to be handled are known, then the designer must determine what type of piping system is needed. The solution will emerge as the design progresses. Piping and pipeline systems include processing equipment, such as separators, heaters, and tanks, that are interconnected by piping consisting of pipe, valves, fittings, pumps/compressors, instrumentation and other specialty elements, and support systems such as racks and/or hangers.

The facility piping and pipeline systems associated with producing wells include, but are not limited to, the well flowline, trunkline, facility (on-plot) interconnecting equipment piping within the production facility, gathering or sales pipelines, and transmission pipelines. A brief description of the aforementioned facility piping and pipeline systems follows.

1.3.1 Flowline

A well flowline identifies a two-phase line from a wellhead to a production manifold or separator. The line between a production manifold and the first separator is sometimes referred to as a flowline but is generally referred to as a production header. Flowlines range in size from 2 in. (50.8 mm) to 20 in. (508 mm).

1.3.2 Trunkline

A trunkline is a larger line that connects two or more well flowlines that carry the combined well streams to the production manifold. Trunklines range from 10 in. (25.4 mm) to 42 in. (106.8 mm).

1.3.3 Manifold

A manifold is a combination of pipes, fittings, and valves used to combine production from several sources and direct the combined flow into appropriate production equipment. A manifold may also originate from a single inlet stream and divide the stream into multiple outlet streams. Manifolds are generally located where many flowlines come together, such as gathering stations, tank batteries, metering sites, separation stations, and offshore platforms. Manifolds also are used in gas lift injection systems, gas/water injection systems, pump/compressor stations, and gas plants and installations where fluids are distributed to multiple units. A production manifold accepts the flow streams from well flowlines and directs the combined flow to either test or production separators and tanks.

1.3.4 Production header (and/or test header)

In a gathering system, the production header connects flowlines from several wells into a single gathering line that is routed to a test separator. The header has production and testing valves to control the flow of each well, opening and closing selected valves

to route flow from specific wells directly to the production facility or separately to testing vessels. Production headers measure well production oil, water, and gas rates by directing individual wells through a test header to the test separator with its special metering equipment.

1.3.5 Gathering system

A gathering system consists of a line downstream of field manifolds or wellhead separators conveying fluid from multiple wells and leading to the production facility. The gathering system may handle condensed hydrocarbon liquids, water, and corrosive.

1.3.6 Separation station

A separation station separates the well stream into gas, oil, and/or water. Increasing the number of stages of separation increases the liquid recovery.

1.3.7 Compressor station

A compression station consists of a gas compressor with its associated piping, coolers, and scrubbers. Low-pressure gas is normally boosted to sales or injection pressure by the compressor.

1.3.8 Pumping station

A pumping station consists of a pump and associated piping with the purpose of boosting liquid pressure to provide the energy for transmission and distribution of a liquid.

1.3.9 Production facility

A production facility is a facility for the field handling, conditioning, treating, processing, and/or measuring of gas, oil, and/or water.

1.3.10 Facility (on-plot) interconnecting piping

Facility piping consists of piping within a well-defined boundary of processing plants, piping compression stations, or pumping stations. The piping is used for conducting a variety of fluids within those boundaries as required.

1.3.11 Transmission line

A transmission line consists of a cross-country piping system for transporting gas or liquids, usually over long distances. They normally transfer custody from production facility to pipeline system inlet—may transfer again at final destination (outlet to a customer). The inlet is normally the custody transfer point or the production facility boundary with the outlet at its final destination, for example, processing plants and

refineries. Transmission lines are usually long and have large diameters. Transmission lines also transport hydrocarbon fluids from producing fields to processing plants or refineries and from plants and refineries to marketing centers.

1.3.12 Injection system

An injection system is similar to a gathering line *but* flows in the opposite direction (toward the wells). Injection lines transport high-pressure gas or water to wellheads for injection into the producing formation. Fluids are injected for reservoir enhancement, production enhancement, gas conservation, gas lift, produced water disposal, water flood, and steam flood. The injection system pressure is usually greater than the gathering system pressure. Reasons for injecting fluids include reservoir pressure maintenance, production enhancement (e.g., water flood, steam flood, CO_2 flood, and other EOR mechanisms), conservation of gas, gas lift, and produced water disposal.

1.4 Facility design considerations

Once the fluid properties and general system components are identified, the next step is to design the facility that includes defining facility piping layout, developing engineering drawings, and specifying the facility piping and pipeline systems. The facility layout requires positioning the various pieces of process equipment within the allocated area; placing instrumentation, control, and safety devices; and locating and designing the pipe supports.

The next step is to develop facility design drawing and specifications. The drawings required include the block diagram, process flow diagram (PFD), piping and instrumentation diagrams (P&IDs), equipment layout drawings and plot plans, piping arrangement and isometric drawings, and instrumentation and control drawings.

Piping design and layout process begin with sizing the piping system for anticipated fluid flows that conform to the applicable codes, standards, and recommended practices and company design criteria, specifications, and policies. Piping line size and wall thicknesses must be determined. Line sizing requires evaluating pressure drop and fluid velocity to avoid excessive break horsepower (BHP) to boost pressure to transport the fluid and accommodating available piping inlet and discharge pressures and allowable pressure drop requirements. Fluid velocities must prevent erosive velocities, destructive water hammer, and liquid and/or solids from settling and collecting in the bottom of the pipe. The pipe wall thickness must withstand the maximum internal burst and external collapse pressures. The internal burst pressure includes initial, transient, and flowline considerations. External collapse resistance includes onshore overburden loads and offshore considerations. The wall thickness must meet applicable design standards such as ASME B31.3, B31.4, and B31.8.

1.5 Typical facility piping design project

The facility layout project begins at the conceptual stage of the project where block diagrams are developed. The size, materials of construction, and layout of various equipment and piping are tied together into a facility design. In oil and gas production facilities, the fluids handled are hydrocarbons plus water, sometimes steam and/or sulfur plus BS&W. Piping also transmits utilities, for example, water, steam, N_2, and air. Facility layout is multidisciplinary where piping is one of many activities being performed including process/chemical, electrical, structural/civil, purchasing, instrumentation, mechanical, management, and health, safety, and environment (HS&E).

Figure 1.2 depicts a typical project and shows progress of drawings and project steps. A facility project begins with the identifying the conceptual design and developing the block diagram. Figure 1.3 shows a hypothetical process to make product "*Z*" from feed "*X*" and "*Y*."

Once the block diagram is approved, the next step is to develop the PFD from process simulation studies, such as HYSIS, FDP, etc. They are prepared by the process engineer and describe the purpose of "big picture" of the facility. The PFD shows all major equipment (unit operations) such as pumps, heaters, separators, and free-water knockout (FWKO) drums and fluid pathways (streams) throughout that system. The PFD is based on "steady-state" operating conditions but may include essential transient conditions (batch plant steps). The mass and energy balances for equipment streams are identified, and the intended operating conditions such as pressure, temperature, level, and flow for the process equipment and piping streams are shown. However, the physical sizes, dimensions, and scaled layout are not indicated. Figure 1.4 is an example of a typical PFD of a gas handling facility from inlet manifold to the liquid and gas sales lines. It contains a detailed description of the process variables in the oil and gas conditioning units. Stations in the process are labeled with a numeral enclosed in a diamond.

The P&IDs along with a host of other design tasks are created from the PFDs. The P&IDs are prepared by the facility/process engineer with participation from a multidisciplinary team. The mass flow rates and operating conditions from the PFDs are used to calculate/select piping and equipment. A number of process simulations are

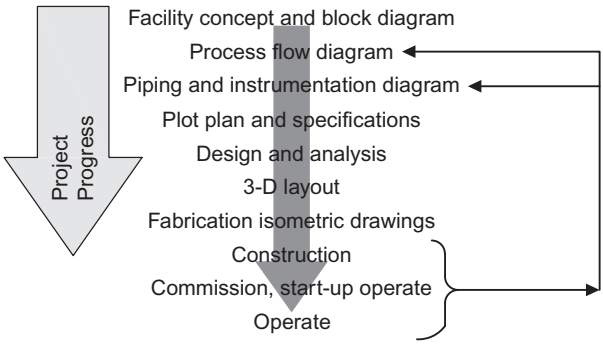

Figure 1.2 Typical block diagram.

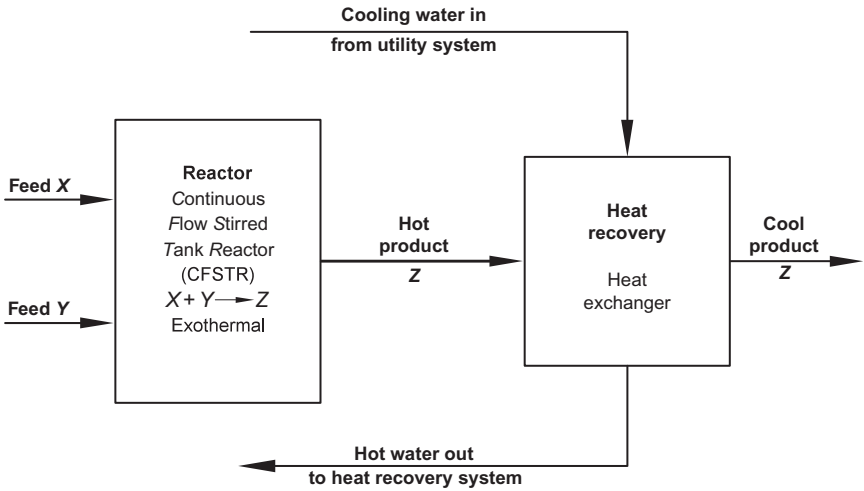

Figure 1.3 Example block diagram.

usually run that cover normal and transient design conditions such as start-up, shutdown, and turndown. The results of the simulations include tables summarizing mass and energy balance conditions and design results, such as wall thicknesses and materials of construction. The P&ID is a schematic representation of the process showing all equipment, piping, and instrumentation. They are an essential design tools for construction, operation, and safety. The P&IDs provide a diagrammatic representation of the process and shows more detail than either the PFD or plot plan. Complete mechanical and instrumentation design of each process component and piping specification breaks. Figure 1.5 shows the P&ID from the PFD shown in Figure 1.4.

The equipment or piping layout or arrangement diagram is commonly called a "plot plan." It is a scaled plan view of the facility locating all major equipment, instrumentation, piping between equipment, buildings, walkways and escape routes, prevailing winds, etc., inside allocated area. The plot plan is prepared by a seasoned facility engineer with the input from a multidisciplinary team. The layout minimizes hazards of releases, fires, and explosions. The plot plan aids in planning and piping details, electrical area classification, and process hazard analyses. Figure 1.6 is an example of a plot plan for the gas handling facility from the PFD and P&ID shown in Figures 1.4 and 1.5.

Isometric drawings (ISOs) are made of individual piping hookups. The ISOs are taken from the piping plot plan and the P&IDs. The intent of ISOs is to convey required information to the piping fabricator and to eliminate any confusion that may arise from interpretation of piping arrangements and communicate all piping and instrumentation details. ISOs show all details including complete identification and material specifications of each element (pipe, flange, valve, instrumentation, fittings, etc.); all dimensions, length, shape, diameters, etc.; and exact location of each piping element in 3D. The information contained on the ISO assures the fabricator produces exactly the right item to insert in the piping system. Figure 1.7 illustrates

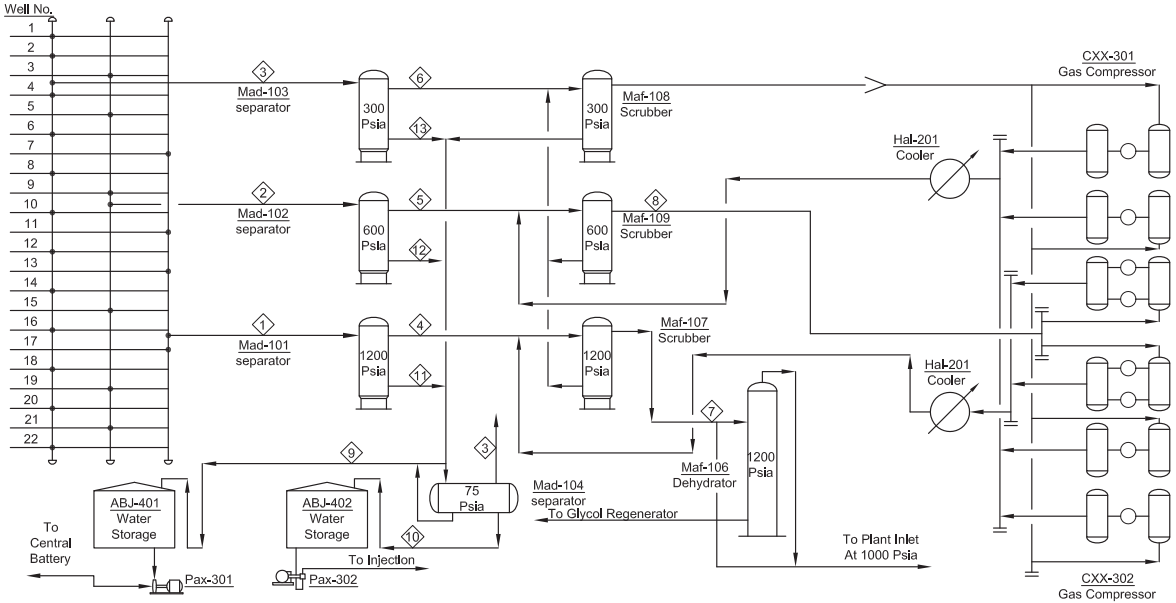

	1	2	3	4	5	6	7	8	9	10	11	12	13	14
Gas MSCF/D	40	24	30	40	24	30	100	00	-	-	-	-	-	0.04
Condensate B/D	1000	720	1000	-	-	-	-	-	2000	-	1000	720	1000	-
Water B/D	640	640	6400	-	-	-	-	-	-	7200	640	900	6400	-
Gas S.Q. (Air°1)	0.020	0.016	0.020	0.026	0.016	0.020	0.021	0.010	-	-	-	-	-	0.070
Temp.°F	80	100	110	x	108	100	110	114						70
Cond. S.Q. (Water-1.0)	0.74	0.70	0.70	-	-	-	-	-	0.02	-	0.74	0.70	0.70	-
Temp. °F	00	00	00	-	-	-	-	-	70	-	70	70	70	-
Water S.Q.	1.0	1.03	1.06	-	-	-	-	-	-	1.04	1.0	0.130	1.06	-
Temp. °F	00	00	00	-	-	-	-	-	-	70	70	70	70	-

Figure 1.4 Example of a typical PFD.

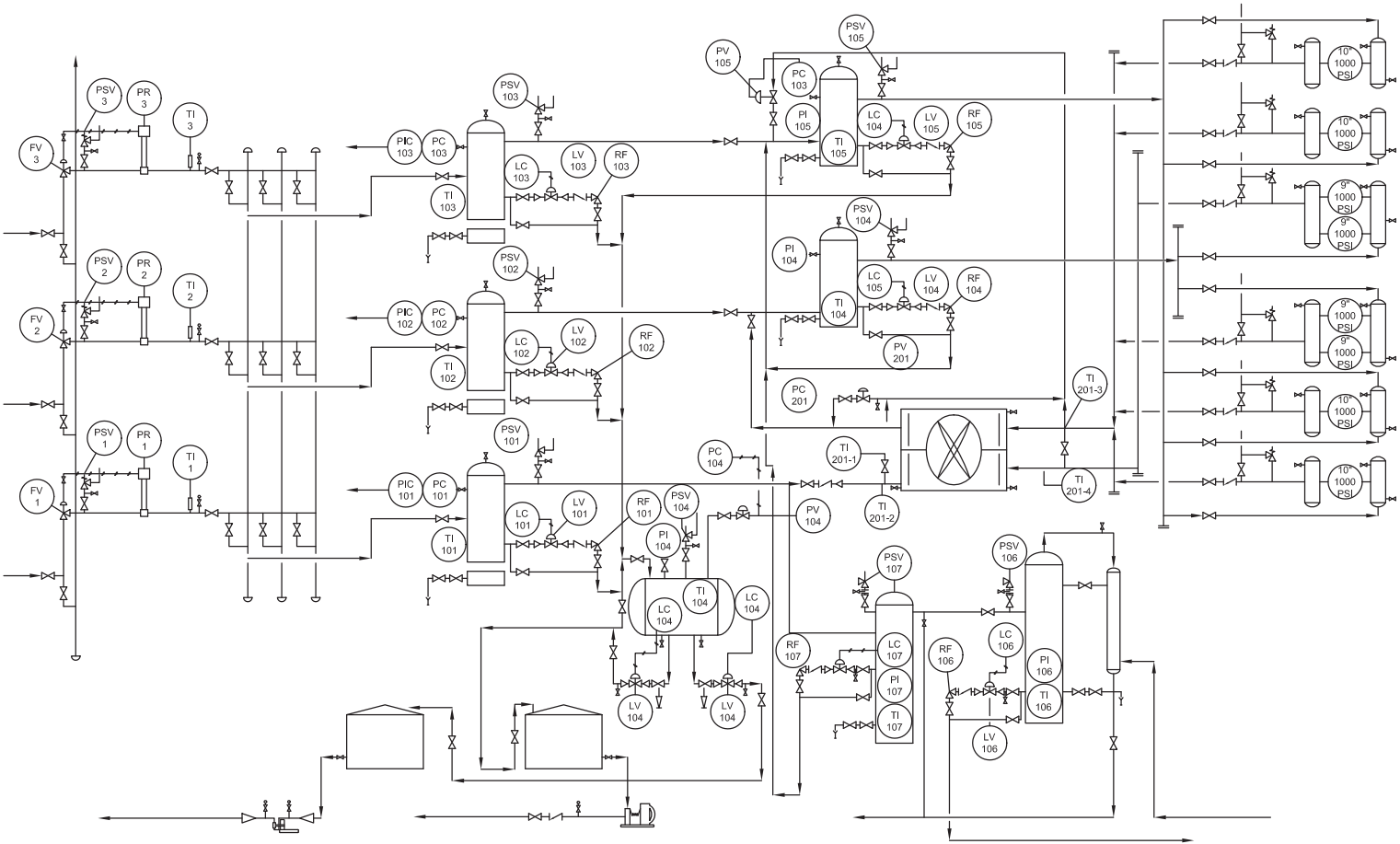

Figure 1.5 Example of a P&ID based on the PFD in Figure 1.4.

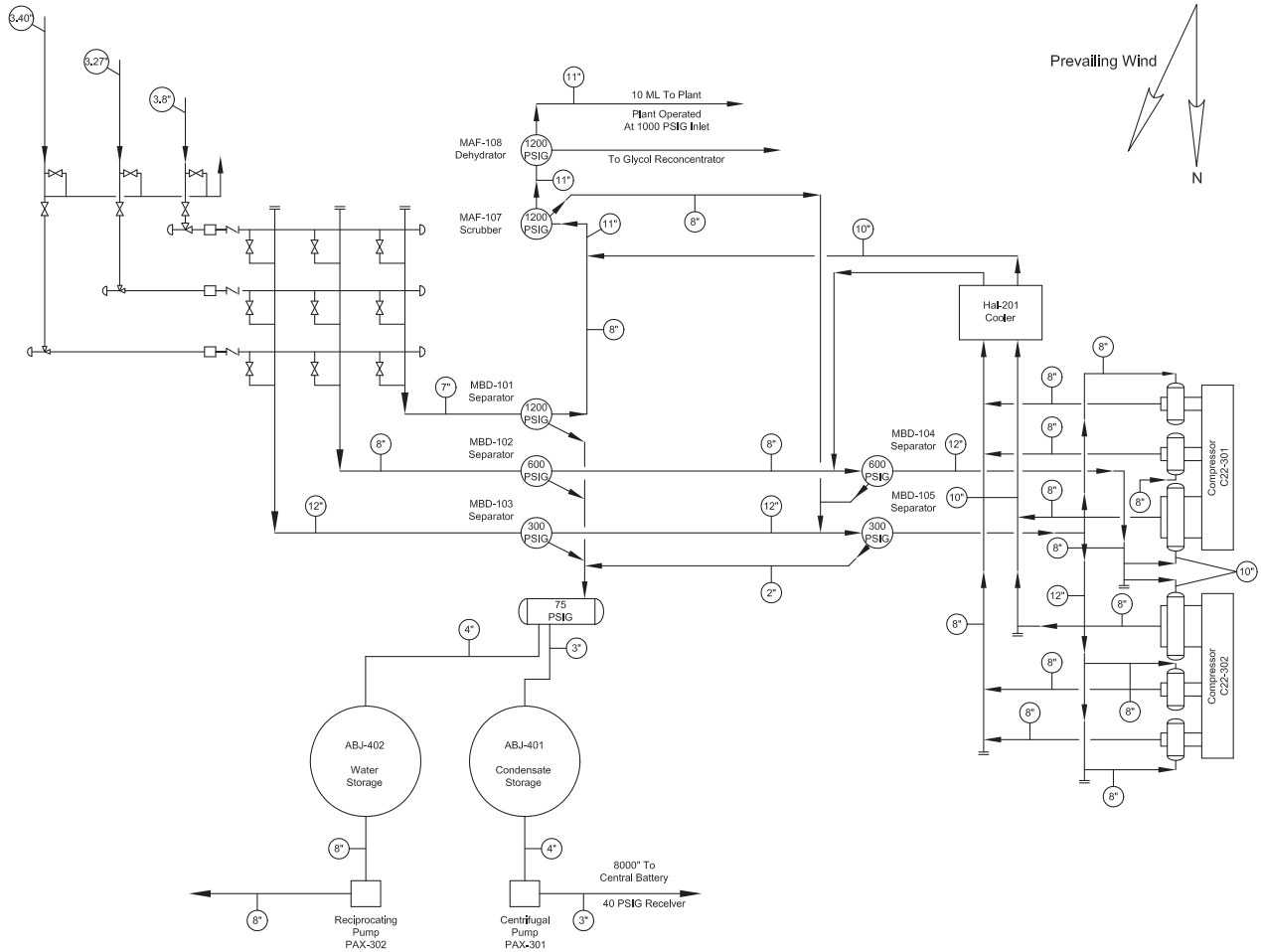

Figure 1.6 Example of a plot plan based on the PFD (Figure 1.4) and P&ID.

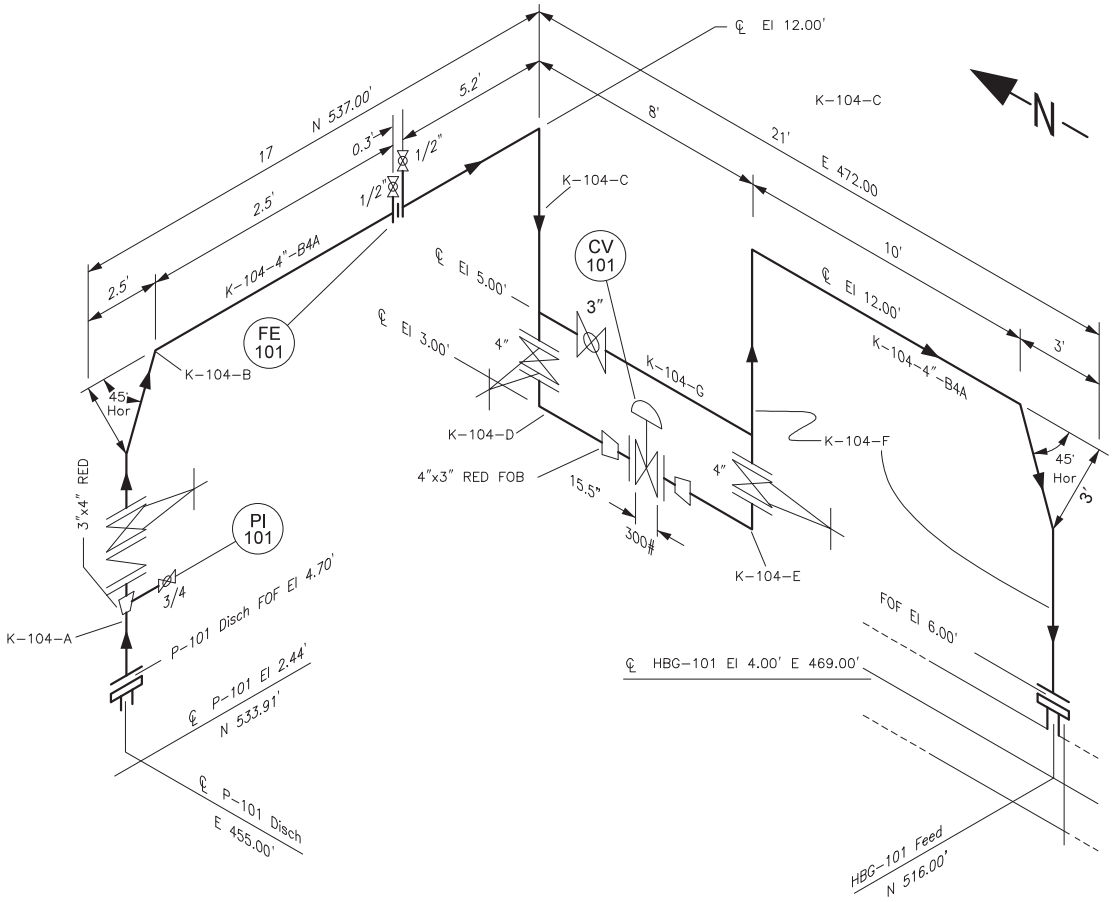

Figure 1.7 Example of an ISO drawing.

Table 1.1 Bill of materials

Item #	Quantity	Description	Material
1	102 feet	8″ SCH 40 SMLS Pipe	A53 Gr B
2	3	8″ 150# RF CS Gate Valven	Cameron or Equal
3	1	8″ 150# RF WNF	A 105 Gr ll
4	1	6″ 150# RF WNF	A 105 Gr ll
5	1	8″ × 6″ SCH 40 Reducer	A 234 Gr B
6	3	8″ SCH 40 90°LRE	A 234 Gr B
7	16	3/4″ Diam Stud Bolts × 4″LG C/W Nuts	A 193 / A 194
8	8	3/4″ Diam Stud Bolts × 3 3/4″LG C/W Nuts	A 193 / A 194
9	2	8″ 150# × 1/8″ THK Gasket	Flexitallic “CGI”
10	1	6″ 150# × 1/8″ THK Gasket	Flexitallic “CGI”
11	3	MSS SP 58 Type 1 Pipe Hanger, 1 ” Rod	Anvil or Equal

an example of an ISO drawing. The completed fabrication ISO should include a bill of materials (BOM). The BOM aligns the ISO with project specifications and notes, including piping and instrumentation specifications, pipe support design, vendor’s data, and other notes. Fabrication ISOs show item numbers that correspond to the BOM. Most CAD ISO packages automatically generate a BOM. Table 1.1 is an example BOM.

1.6 Offshore considerations

Remote locations and constrained space coupled with hazardous working conditions force a unique challenge on offshore piping systems. An ever-increasing amount of the world’s crude oil and gas comes from offshore fields. The trend will accelerate as onshore fields are depleted. A growing amount of engineering effort is being expended on offshore facility designs. Therefore, it is appropriate that a brief discussion of platforms that accommodate simultaneous drilling and production operations be discussed.

As shown in Figure 1.8, many offshore facilities use modular construction. The modules are basically large boxes of equipment installed in place and weighing from 300 to 2000 tons each. Modules are constructed, piped, wired, and tested in shipyards or in fabrication yards. Modules are transported on barges and set on the platform, where interconnections are made. Modular construction is used to reduce the amount work and the number of people required for installation and start-up. Unfortunately, it is virtually impossible to meet the layout safety standards of onshore operations with offshore space constraints.

The equipment arrangement plan of an offshore platform shows the layout of all major equipment and connecting piping. As shown in Figures 1.8 and 1.9, the

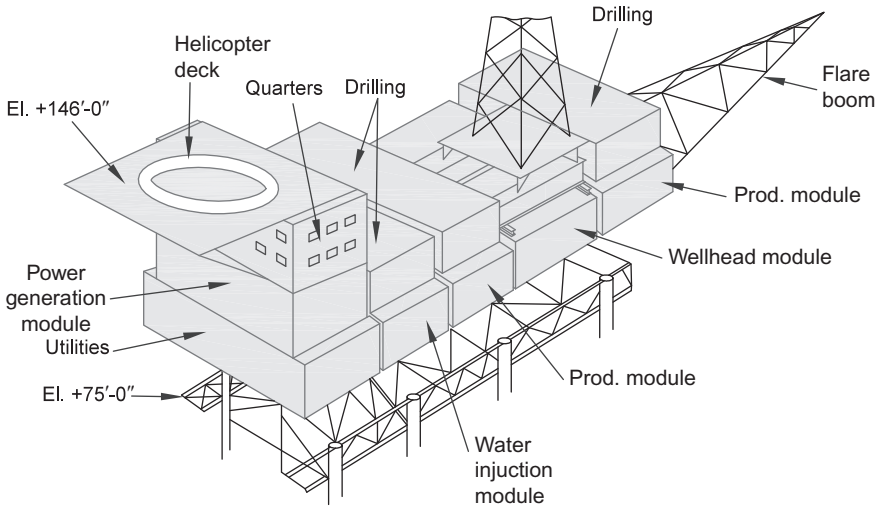

Figure 1.8 Schematic of a large offshore platform, illustrating the concept of modulation.

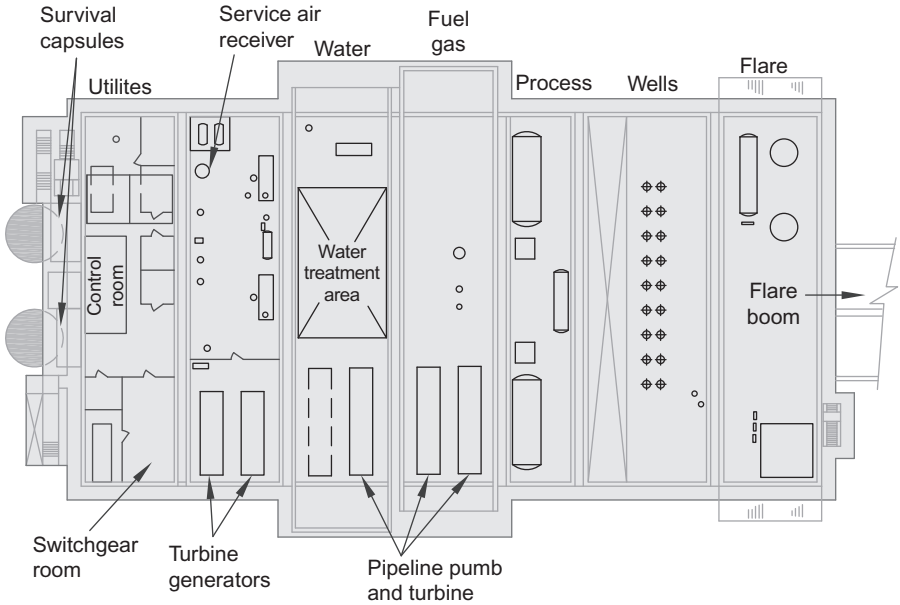

Figure 1.9 Equipment arrangement plan of a typical offshore platform illustrating the layout of the lower deck.

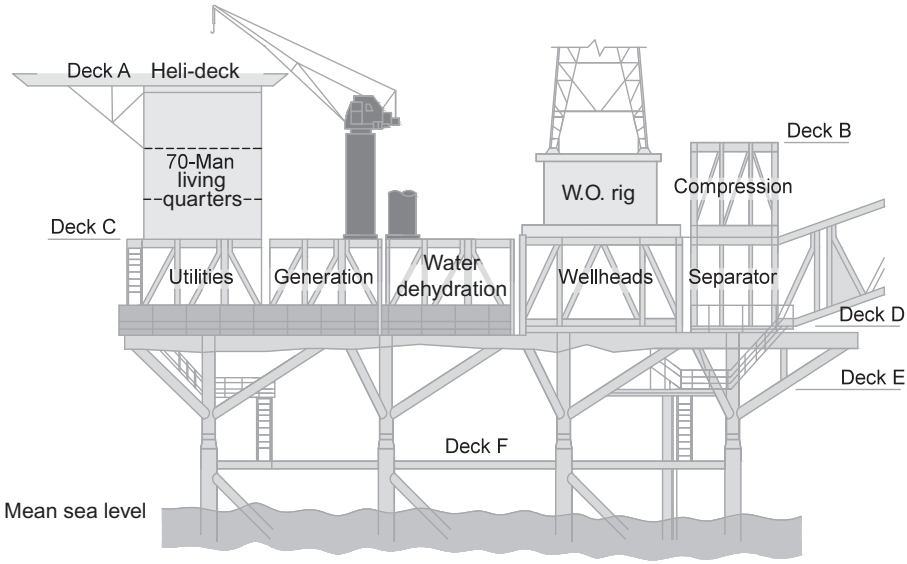

Figure 1.10 Typical elevation view of an offshore platform showing relationships among major equipment modules.

right-hand module contains the flare drums, water skimmer tank, and some storage vessels. It also provides support for the flare boom. The adjacent wellhead module includes a drilling template with conductors through which wells will be drilled. The third unit is the process module, containing the separators and other processing equipment. Modules 4 and 5 contain turbine-driven pumps, fuel gas scrubbers, and the produced water treating area. The last two modules house utilities such as power generators, air compressors, potable water makers, control room, switchgear, and battery rooms. The living quarters are located over the last module. Figure 1.10 shows an elevation of a platform in which the equipment arrangement is essentially the same.

API RP 14J discusses offshore platform design and includes several representative platform diagrams. Anyone familiar with those kinds of operations knows piping system layout is critical in that tight congestion.

This chapter introduced several concepts that illustrate the complex challenge of piping system projects such as

- need to know system objectives,
- need to know how to design piping systems,
- interaction across a range of technical disciplines,
- typical project steps and major deliverable documents,
- special conditions related to offshore installations.

The remainder of the text attempts to incorporate everything the facility piping/pipeline engineer or designer needs to properly design, specify, test, construct, install, operate, maintain, and repair facility piping and pipeline systems.

Further reading

[1] ASME B31.1, Standard for Power Piping, ASME, New York City, 2012.
[2] ASME B31.3, Standard for Power Piping, ASME, New York City, 2012.
[3] ASME B31.4, Standard for Liquid Transportation Systems for Hydrocarbons, Liquid Petroleum Gas, Anhydrous Ammonia and Alcohols, ASME, New York City, 2012.
[4] ASME B31.8, Standard for Gas Transmission and Distribution Piping Systems, ASME, New York City, 2012.
[5] API RP 14E, Recommended Practice for the Design and Installation of Offshore Production Platform Systems, API, Washington, DC, 2012.

Piping standards, codes, and recommended practices

2

2.1 Overview

Standards are documents that establish the methods for manufacturing and testing. Codes are documents that establish design practices, including factors of safety and efficiency. Recommended practices are documents that establish industry-accepted practices. The documents are prepared and updated by committees whose members are usually representatives from the industry, government, universities, institutions, professional societies, etc.

The terms "standard" and "code" have become interchangeable, but documents are termed codes when they cover a broad area, have government acceptance, and form the basis for legal requirements. "Recommended practices" document proven engineering practices. "Shall" is the word used in standards and codes that denotes a requirement or obligation and "should" is the word used in recommended practices that implies a recommendation and not a "legal" requirement.

One should be aware that legislative and regulatory bodies often explicitly adopt industry standards, codes, and recommended practices and other such documents directly into their statutes and regulations by the act of "incorporation by reference." By merely mentioning some secondary document (e.g., some recommended practice) within some primary document (i.e., some law or rule) or more formally by explicitly stating that it is "incorporated by reference," legislators and regulators can give that secondary document all the enforceable legal imperatives of law or rule. If properly written, incorporation by reference makes the entire second document an explicit part the primary document. For example, OSHA's welding, cutting, and brazing regulation (29 CFR §1910.252 (a)) states that the "NFPA Standard 51B… is incorporated by reference." Likewise, ASME codes include extensive lists of other standards that are incorporated into the B31 Codes by reference.

In addition, statutes or regulations may require companies to apply *R*ecognized *a*nd *G*enerally *A*ccepted *G*ood *E*ngineering *P*ractice (RAGAGEP). RAGAGEP is a broad term that can encompass a wide range of documents, including all of the standards, codes, and recommended practices mentioned in this chapter. For example, OSHA's Process Safety Management of Highly Hazardous Chemicals rule requires that operators apply RAGAGEP for Mechanical Integrity (29 CFR §1910.119 (d)(3)(ii)) (see also USEPA's Risk Management Plan rule at 40 CFR §68.73). Often, this approach injects some ambiguity into a law or rule because it does not explicitly state which standards, codes, and recommended practices apply and leaves room for interpretation by each operator, regulator, agent, or inspector.

Standards and codes contain the minimum requirements for the selection of material, dimensions, design, erection, manufacturing, construction, testing, and inspection

Surface Production Operations. http://dx.doi.org/10.1016/B978-1-85617-808-2.00002-X
Copyright © 2016 Elsevier Inc. All rights reserved.

Table 2.1 Principal organizations issuing codes and standards of concern for piping systems

American Petroleum Institute	API
American Society of Mechanical Engineers	ASME
American National Standards Institute	ANSI
Manufacturers Standardization Society of the Valve and Fittings Industry	MSS
National Association of Corrosion Engineers	NACE
National Fire Protection Association	NFPA

so as to ensure the safety and integrity of piping systems. Periodic revisions are made to reflect developments in the industry.

Many US standards and codes are issued by the American Society of Mechanical Engineers (ASME). Several other organizations issue standards and codes that apply to piping. Table 2.1 lists the principal organizations issuing standards and codes. Although many other organizations issue codes, standards, recommendations, technical bulletins, and so forth, these most important sources are the focus of this text.

The American National Standards Institute (ANSI) oversees the development and distribution of voluntary consensus standards for products, services, processes, systems, and personnel in the United States, and ANSI coordinates US standards with international standards to assure that American products can be used around the globe. ANSI also accredits standards developed through or by other organizations to ensure that characteristics and performance of products are consistent, that the same definitions and terms apply, and that products are listed correctly. Finally, ANSI accredits other organizations that certify products or personnel according to requirements defined in international standards.

ANSI makes available many such standards from other standards-issuing organizations. Each of these standards is identified by the "issuing organization's" designation (where one exists) preceded by ANSI's and the issuing organization's acronym. If the issuing organization does not provide a designation, ANSI assigns one. Other countries and international organizations issue standards (Table 2.2). For example, the British Standards Institution (BSI) in the United Kingdom, the Deutscher Normenausschuss (DIN) in Germany, and the International Organization for Standardization (ISO) issue many standards. Copies of these standards can be obtained directly from ANSI.

2.1.1 General piping standards

2.1.1.1 Background

The most important code for pressure-piping systems is ASME B31. In 1926, the American Standards Association (ASA) initiated "project B31" to develop a piping code. ASME was the sole administrator. In 1935, the document was published as the "American Tentative Standard Code for Pressure Piping." The code was published as the ASA B31.1 "American Standard Code for Pressure Piping" from 1942 to 1955.

Table 2.2 International codes and specifications for steel pipe

	USA	UK	W. Germany		Sweden
Carbon Steel Pipe	*ASTM A53*	*BS 3601*	*DIN 1629*		
	Grade A SMLS	HFS 22 and CDS 22	St 35		SIS 1233-05
	Grade B SMLS	HFS 27 and CDS 27	St 45		SIS 1434-05
	ASTM A53	*BS 3601*	*DIN 1626*		
	Grade A ERW	ERW 22	Blatt 3 St 34–2 ERW		
	Grade B RW	ERW 27	Blatt 3 St 37–2 ERW		
	ASTM A53	*BS 3601*	*DIN 1626*		
	FBW	BW 22	Blatt 3 St 34–2 FBW		
	ASTM A106	*BS 3602*	*DIN 17175*[a]		
	Grade A	HFS 23	St 35-8		SIS 1234-05
	Grade B	HFS 27	St 45-8		SIS 1435-05
	Grade C	HFS 35			
	ASTM A134	*BS 3601*	*DIN 1626*		
		EFW	Blatt 2 EFW		
	ASTM A135	*BS 3601*	*DIN 1626*		
	Grade A	ERW 22	Blatt 3 St 34–2 ERW		SIS 1233-06
	Grade B	ERW 27	Blatt 3 St 37–2 ERW		SIS 1434-06
	ASTM A139	*BS 3601*	*DIN 1626*		
	Grade A	EFW 22	Blatt 2 St 37		
	Grade B	EFW 27	Blatt 2 St 42		
	ASTM A155	*BS 3602*	*DIN 1626, Blatt 3, with certification C*		
	Class 2				
	C 45		St 34-2		
	C 50		St 37-2		
	C 55	EFW 28	St 42-2		
	KC 55		St 42-2[a]		
	KC 60	EFW 28S	St 42-2[a]		

Continued

Table 2.2 Continued

	USA	UK	W. Germany		Sweden
	KC 65		St 52-3		
	KC 70		St 52-3		
	API 5 L	*BS 3601*	*DIN 1629*		
	Grade A SMLS	HFS 22 and CDS 22	St 35		SIS 1233-05
	Grade B SMLS	HFS 27 and CDS 27	St 45		SIS 1434-05
	API 5 L	*BS 3601*	*DIN 1625*		
	Grade A E RW	ERW 22	Blatt 3 St 34–2 ERW		SIS 1233-06
	Grade BERW	ERW 27[b]	Blatt 4 St 37–2 ERW		SIS 1434-06[b]
	API 51	*BS 3601 Double-welded*	*DIN 1626*		
	Grade A EFW	EFW 22	Blatt 3 St 34–2 FW		
	Grade BEFW	EFW 27[b]	Blatt 4 St 37–2 FW		
	API 5 L	*BS 3601*	*DIN 1626*		
	FBW	BW 22	Blatt 3 St 34–2 FBW		
Stainless Steel Pipe	*ASTM A312*	*BS 3605*	*WSN*	*Designation*	
	TP 304	Grade 801	4301	×5 CrNi 18 9	SIS 2333-02
	TP 304H	Grade 811			
	TP 304 L	Grade 801 L	4306	×2 CrNi 18 9	SIS 2352-02
	TP 310	Grade 805	4841	×15 CrNiSi 25 20	SIS 2361-02
	TP 316	Grade 845	4401/4436	×5 CrNiMo 18 10	SIS 2343-02
	TP316H	Grade 855			
	TP316L	Grade 845 L	4404	×2 CrNiMo 18 10	SIS 2353-02
	TP 317	Grade 846			
	TP 321	Grade 822 Ti	4541	×10 CrNiTi 18 9	SIS 2337-02
	TP 321H	Grade 832 Ti			
	TP 347	Grade 822 Nb	4550	×10 CrNiNb 18 9	SIS 2338-02
	TP 347H	Grade 832 Nb			

[a]Specify "Si-killed".
[b]Specify API 5 L Grade B testing procedures for these steel.

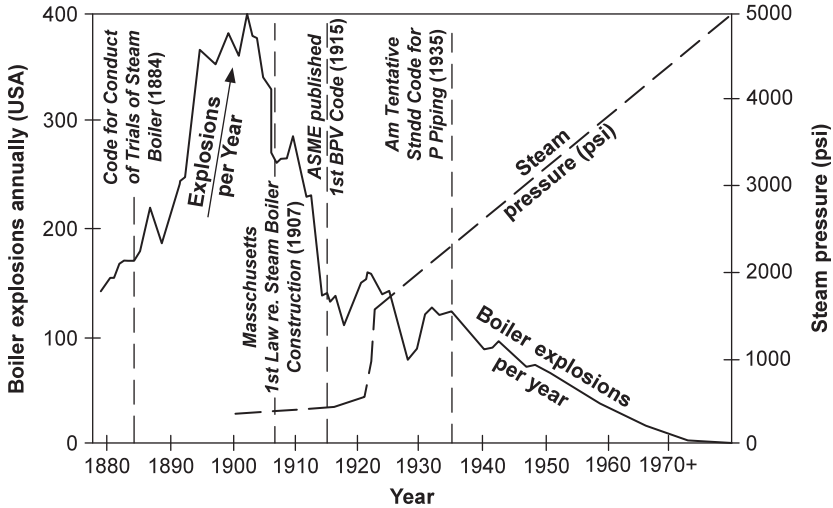

Figure 2.1 Twentieth-century benefit of ASME B31 Piping codes (Courtesy of Cardozo in MacPherson v. Buick Motor Co.).

It consisted of separate sections for different industries. These sections were split off, starting in 1955 with ASA B31.8 "Gas Transportation and Distribution Piping Systems." In 1959, ASA B31.3 "Petroleum Refinery Piping Code" was first published. A number of separate sections have been prepared, most of which have been published. Figure 2.1 illustrates the benefit of the ASME B31 piping codes, specifically the near eradication of boiler explosions despite the dramatic increase in applied steam pressure.

Table 2.3 lists the sections of the ASME code that apply to the various types of plant piping. The following four standards/codes are the most widely used when installing production facilities:

- ASME Code B31.1 "Power Piping"
- ASME Code B31.3 "Process Piping"
- ASME Code B31.4 "Pipeline Transportation Systems for Liquid Hydrocarbons and Other Liquids"
- ASME Code B31.8 "Gas Transmission and Distribution Piping Systems"

In 1974, Section B31.6 "Chemical Plant Piping" was prepared but was not published. It was merged into B31.3, since the two code sections were closely related. In 1976, a joint code section, B31.3 "Chemical Plant and Petroleum Refinery Piping," was published. In the 1976, publication items such as nonmetallic piping and safeguarding were introduced. In 1980, the nonmetal portions of B31.3 Code were combined with Chapter VIII.

In 1981, a draft code of Section B31.10 "Cryogenic Piping" was prepared and was ready for approval. Since the coverage overlapped B31.3, it was decided to merge the Standards Committees and develop a single inclusive code. In 1984, another

Table 2.3 ASME B31 Code for pressure piping

B31.1	*Power piping*—Electric power generating stations, institutional and industrial plants, geothermal heating, central and district heating/cooling systems
B31.3	*Process piping*—Petroleum refineries; chemical, pharmaceutical, textile, paper, semiconductor, cryogenic plants; related processing plants/terminals
B31.4	*Pipeline transportation systems for liquid hydrocarbons and other liquids*—Predominately liquid products between terminals and plants and within terminals, pumping, regulating, metering stations
B31.5	*Refrigeration piping*—Refrigerants and secondary coolants
B31.8	*Gas transportation and distribution piping systems*—Predominately gas products between sources and terminals, including compressor, regulating and metering stations; gas gathering pipelines; includes sour gas
B31.9	*Building services piping*—Industrial, institutional, commercial, and public buildings; and in multi-unit residences, so long as it does not require the range of sizes, pressures, and temperatures covered in B31.1
B31.11	*Slurry transportation piping systems*—Aqueous slurries between plants and terminals and within terminals, pumping, regulating stations
B31.12	*Hydrogen piping and pipelines*—Gaseous and liquid hydrogen service, pipelines in gaseous hydrogen service

potentially separate code was added as a new chapter to B31.3, Chapter IX "High-Pressure Piping."

The current B31.3 Code is very broad in scope. It covers fluids as harmless as water and as hazardous as hydrogen sulfide. It covers temperatures from cryogenic to 1500 °F (815 °C) and beyond and pressures from vacuum and atmospheric to 50,000 psi (340,000 kPa) and higher. There is a great deal of responsibility placed with the owner and latitude to use good engineering.

The acronym in the title of B31 Code has changed from ASA to ANSI to ASME. In 1969, ASA was changed to ANSI. In 1990, the Standards Committee was reorganized as a committee operating under the ASME. Thus, it is currently correct to refer to the code as ASME B31. These changes have not changed the Standards Committee structure or the code.

As stated, B31 Codes can be difficult to apply, as there are many issues to consider during the design and construction and many are not obvious. ASME codes presume that the users of B31 have a background in many different subjects; however, understanding is often different between individuals who are usually knowledgeable in a specific technical area, such as design, fabrication, or examination.

This textbook is intended to provide an understanding of the design, fabrication, testing, and examination of facility piping and pipeline systems. It does not address all aspects of design, materials, fabrication, testing, and examination of facility piping and pipeline systems. Essentially, the minimum requirements of the code must be incorporated into an engineering design, and the ASME B31 Code is not, however, a design handbook. Its rules are the "minimum" one can do to comply with the code and does not intend to and will not replace competent engineering, summed up in the term, meeting the "intent of the code or minimum requirements."

2.1.1.2 B31 Code organization

B31.1 Code has six chapters, and all other codes *largely* follow the same pattern in chapters, parts, and paragraphs, for example, B31.3 has nine chapters in total but the first six chapters follow the B31.1 pattern. The first six chapters of B31.3 cover the basic piping requirements for Normal and Category D Fluid Service in metallic pipe. The paragraphs throughout B31 follow a specific numbering system, for example, B31.1 paragraphs are numbered in the 100s and B31.3 paragraphs are numbered in the 300s. Code Chapters 1 to VI are called "base code." Table 2.4 lists some excerpts as examples of this pattern. Paragraph numbers in the base code are repeated in other B31 Codes as appropriate. For example, B31.3 Chapters VII to IX follow this pattern, differentiated by a letter placed before the paragraph number:

- Chapter VII: "A" (rules for nonmetallic piping and piping lined with nonmetals)
- Chapter VII: "M" (for Category M, metallic and nonmetallic)
- Chapter IX: "K" (for high-pressure piping and Normal and Category D Fluid Services)

Table 2.4 Excerpts from code contents to show ASME code organizing pattern

Section	Title or topic
B31.1	*Power Piping*
Chapter II	Design
Part 1	Conditions and Criteria
101	Design Conditions
107	Valves
B31.3	*Process Piping*
Chapter II	Design (Base Code)
Part 1	Conditions and Criteria
301	Design Conditions
307	Valves and Specialty Components
Chapter VII	Nonmetallic Pipe and Pipe Lined w/ Nonmetals
Part 1	Conditions and Criteria
A301	Design Conditions
A307	Valves and Specialty Components
Chapter VIII	Piping for Category M Fluid Service
Part 1	Conditions and Criteria
M301	Design Conditions
M307	Metallic Valves and Specialty Components
B31.4	*Pipeline Systems for Liquids*
Chapter IX	Offshore Liquid Pipeline Systems
A401	Design Conditions
A407	Valves
B31.8	*Gas Transmission and Distribution Piping*
801	General (Base Code)
807	Quality Assurance

- Chapter X: "U" (for high-purity piping) and "UM" (for high-purity piping in Category M Fluid Service)

The degree to which ASME follows the base code pattern, it yields easy cross-referencing from code to code and from base code to later chapters within any code.

2.1.1.3 ASME Boiler and Pressure Vessel Code

The ASME Boiler and Pressure Vessel Code (BPVC) is also a key code for oil field piping systems (refer to Table 2.5). The code covers the design, fabrication, inspection, and testing of boilers and pressure vessels. The BPVC sections most typically applicable in the oil and gas industries include Sections I, II Parts A and D, V, VIII Divisions 1 and 2, and IX.

A "boiler" is defined as a closed vessel used to heat a liquid (usually hot water, steam, or other fluid composition) for heat, power generation, or other process needs. The boiler may be fired directly or indirectly (heat recovery). A "pressure vessel" is an enclosure designed to contain and control substances, reactions, etc., at a pressure greater than 15 psig (1 barg). The pressure source can be an indirect mechanical source (pump) or indirect heat source or direct, for example, chemical reaction. The pressure vessel terminates at

- the first circumferential joint for welded end connections,
- the face of the first flange in a bolted flange connection,
- the first threaded joint in a threaded connection.

Examples include (without limit) separators, scrubbers, dehydration units, and fractionators and compressed gas storage tanks (produced gas, air, N_2, etc.).

ASME BPVC Section I covers the rules for constructing power boilers while Section II covers materials. Section II is a supplement referenced by other code sections. The "Parts" within Section II provide material specifications with mechanical properties, heat treatment, heat and product chemical composition and analysis, test specimens, and methodologies of testing. The tables within Section II are provided in customary "field" and "metric" units. Section VIII covers the construction rules for pressure vessels. There are three "divisions" that cover mandatory requirements, specific prohibitions, and nonmandatory guidance for pressure vessels. It covers materials, design, fabrication, inspection and testing, markings and reports, overpressure protection, and certification of pressure vessels with internal or external pressure greater than 15 psig (1 barg). Pressure vessels may be fired or unfired. The pressure source may be external, application of heating an indirect or direct source, process reaction, or any combination.

2.1.1.4 ASME B31 and ASME BPV code scope

The introductory "Scope" paragraphs of each B31 Code section describes the target piping, limitations, what is included, and what is excluded. Table 2.3 shows the scope of each B31 Code section. Each B31 Code section's Chapter 1, usually numbered "X00.1," addresses scope issues and provides convenient diagrams to illustrate the

Table 2.5 Sections of the ASME BPVC

I	Rules for construction of power boilers
II	materials
	Part A—Ferrous material specifications
	Part B—Nonferrous material specifications
	Part C—Specifications for welding rods, electrodes, and filler metals
	Part D—Properties (customary)
	Part D—Properties (metric)
III	Rules for construction of nuclear facility components
	Subsection NCA—General requirements for Division 1 and Division 2
	Division 1
	Subsection NB—Class 1 components
	Subsection NC—Class 2 components
	Subsection ND—Class 3 components
	Subsection NE—Class MC components
	Subsection NF—Supports
	Subsection NG—Core support structures
	Subsection NH—Class 1 components in elevated temperature service
	Appendices
	Division 2—Code for concrete containments
	Division 3—Containments for transportation and storage of spent nuclear fuel and high level radioactive material and waste
	Division 4—Reserved for fusion reactors (not active)
	Division 5—Construction rules for high temperature reactors
IV	Rules for construction of heating boilers
V	Nondestructive examination
VI	Recommended rules for the care and operation of heating boilers
VII	Recommended guidelines for the care of power boilers
VIII	Rules for construction of pressure vessels
	Division 1
	Division 2—Alternative rules
	Division 3—Alternative rules for construction of high pressure vessels
IX	Welding and brazing qualifications
X	Fiber-reinforced plastic pressure vessels
XI	Rules for in-service inspection of nuclear power plant components

scope of that section. Figures 2.2–2.6 illustrate the general scope for B31.1, B31.3, B31.4, and B31.8.

2.1.1.5 Piping code specs change

Conventionally, all flow lines, both onshore and offshore, are governed by B31.8, even though fluids may only be liquids. The reason for this is that there is a possibility that a lower production zone may contain gas that would require B31.8 Piping Code. B31.3 governs all lines inside a wellsite, inside a central battery, inside a plant (inside

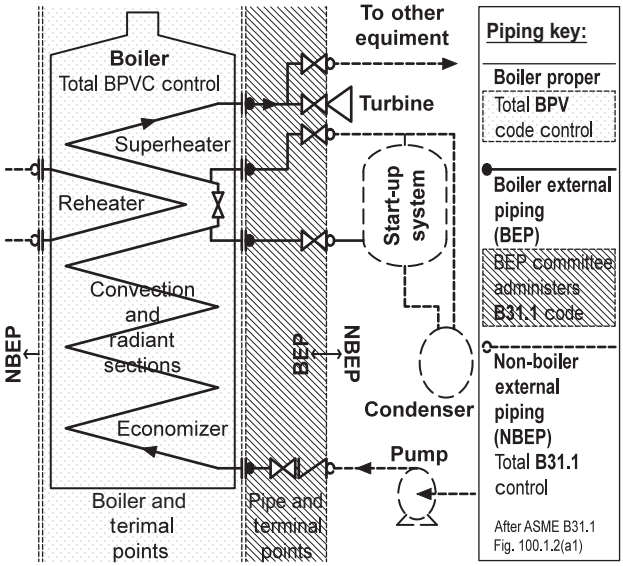

Figure 2.2 BPVC versus B31.1 (Courtesy of ASME B31.1).

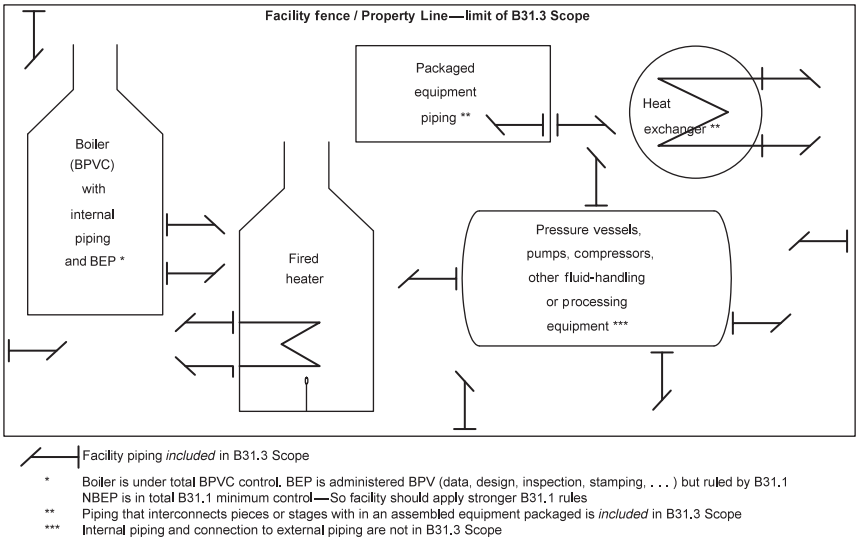

Figure 2.3 B31.3 Scope: Inside the facility property line (Courtesy of ASME B31.3).

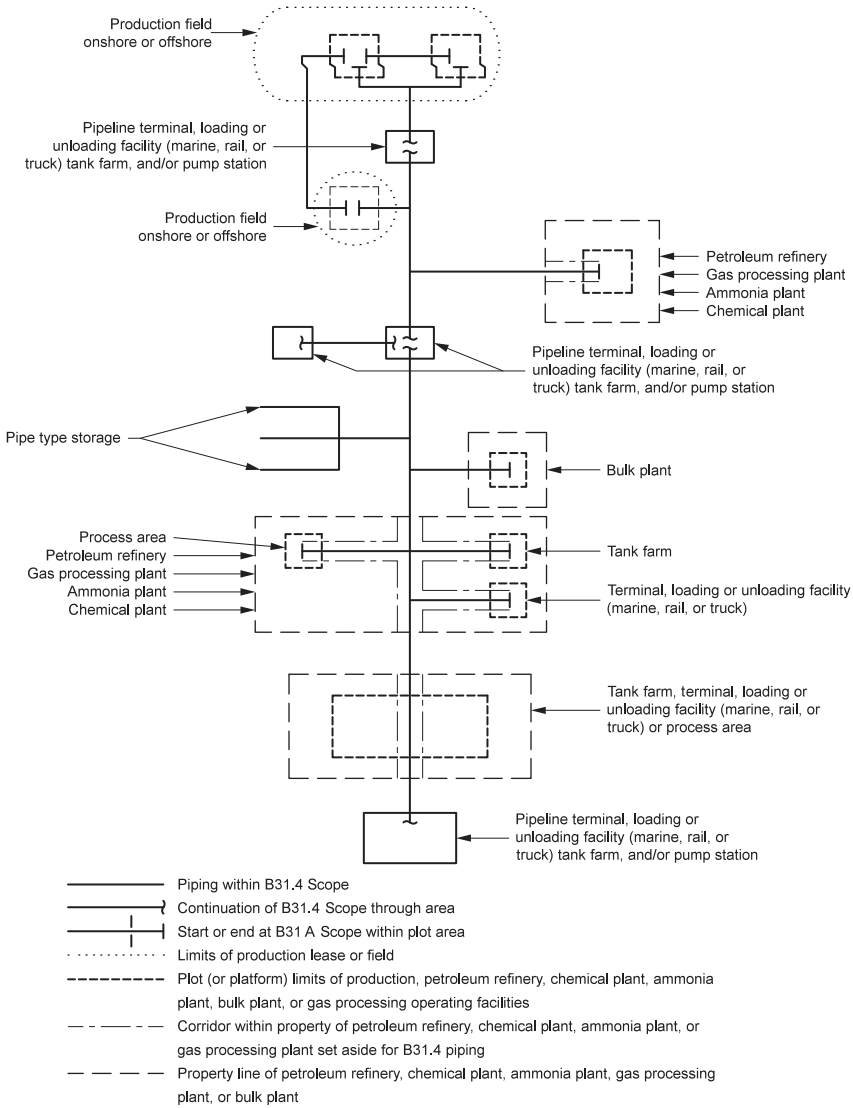

Figure 2.4 B31.4 Scope: Liquid pipelines and related equipment (Courtesy of ASME B31.4).

the fence), or on a platform, except if piping is exclusively gathering or there is no transmission (no processing), then B31.4 or B31.8 Code, as appropriate, would govern. This includes pump, compressor, and/or metering stations and pig launchers/receivers unless those specific fluids are processed on the premises even though other lines/fluids are processed there. After separation, off the premises or platform, gathering and transmission lines are B31.4 or B31.8 Code as appropriate.

Incoming pipelines and flow lines entering an offshore platform are governed by B31.8 up to the insulation flange (first riser flange above the waterline). From the

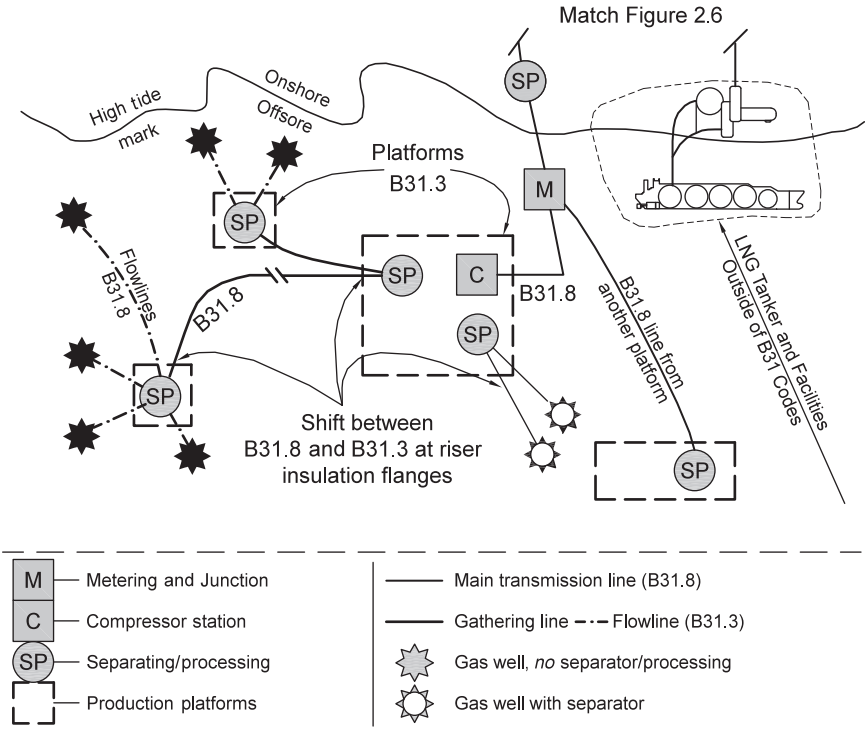

Figure 2.5 B31.8 Scope: Gas transmission piping offshore (Courtesy of ASME B31.8).

insulation flange onto the platform, B31.3 governs, provided the fluids are processed on the platform. Departing pipelines containing processed fluids are shipped in gathering lines or transmission pipelines that flow down a riser in B31.3 pipes to the insulation flange where the pipeline shifts to B31.4 or 3B31.8 as appropriate. Piping of any sort that simply crosses property (onshore or offshore), without any processing on the premises or platform, remains 100% in either B31.4 of B31.8 even though it may pass through a pump, compressor and/or metering stations, pig launchers/receivers, etc., regardless of whether other fluids are processed.

2.1.1.6 Plastic and fiberglass pipe considerations

The American Petroleum Institute (API) specification 5LR covers the manufacture and installation of reinforced thermosetting resin line pipe (fiberglass). The ANSI has introduced several schedules for pipe made from various plastics. These ASME standards and others for steel, nonferrous alloys, and plastic pipe are listed in Table 2.6.

When the facility piping system is designed in accordance with ASME B31.3, the design criteria in Chapter VII of ASME B31.3 are applicable to plastic piping. When the piping system is designed in accordance with ASME B31.8, the design criteria of Paragraph 842.3 of ASME B31.8 are applicable to plastic piping.

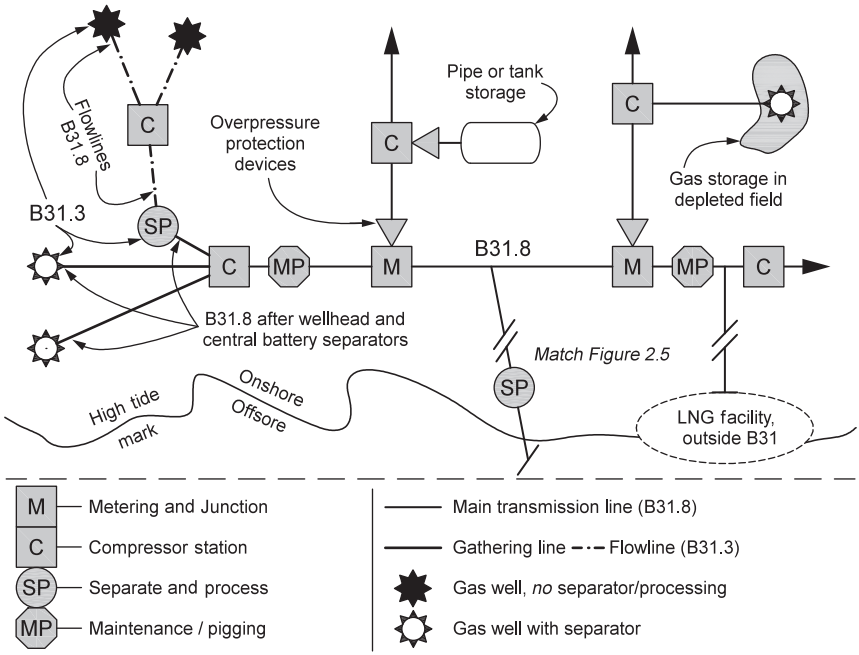

Figure 2.6 B31.8 Scope: Gas transmission piping onshore (Courtesy of ASME B31.8).

Table 2.6 Key standards for steel, corrosion-resistant alloy (CRA), and nonferrous alloy pipe

API Spec 5L	Specification for Line Pipe
API Spec 5LC	Specification for CRA Line Pipe
API Spec 5LD	CRA Clad or Lined Steel Pipe
API Spec 5LE	Polyethylene (PE) Line Pipe
API Spec 15HR	High Pressure Fiberglass Line Pipe
API Spec 15LR	Low Pressure Fiberglass Line Pipe
API Spec 5LS	Spiral-Weld Line Pipe
API Spec 5LU	Ultra High-Test Heat Treated Line Pipe
ASME B36.10M	Welded and Seamless Wrought Steel Pipe
ASME B36.19M	Stainless Steel Pipe

All oil field piping systems (oil, water, and gas) are subject to cyclic pressure surge during the service life of the system. Reinforced thermosetting resin pipe (RTRP) is the most vulnerable plastic piping to this type of service because cyclic stresses may cause the fiberglass to fail. Any epoxy resin used should be selected on the basis of the allowable stresses and temperatures given in the appropriate codes.

Production flow lines made of plastic pipe should be limited to a maximum of 300 psi (20 bar) pressure and a temperature of 150 °F (66 °C). Gathering systems

Table 2.7 Key standards for plastic and fiberglass pipe

API RP 15CLT	RP for composite lined steel tubular goods
API Spec 15HR	High pressure fiberglass line pipe
API Spec 15LE	Polyethylene (PE) line pipe
API Spec 15LR	Low pressure fiberglass line pipe
API Spec 15S	Qualification of spoolable reinforced plastic line pipe
ASME B31 Codes	For plastic and fiberglass piping, *see* Chapter VII of B31.3 and Paragraph 842.3 of B31.8

should be limited to 100 psi (7 bar) pressure and a temperature between 100 and 150 °F (37.8-66 °C). The higher temperature rating is reinforced for thermoset pipe.

The thermal expansion for fiberglass-reinforced plastic (FRP) and other plastic pipes is three times that of steel. Therefore, an allowance for this expansion is critical in the design and installation of flow lines. Designs should include more gradual elevation changes along the line route than would be customary with steel flow lines. Flow lines should be buried with at least 3 ft. (1 m) of cover, taking into account that low resistance to impact damage necessitates careful handling and backfilling during this operation. Do not use fiberglass in vacuum systems or where repetitive vacuum surges are likely to occur. The fiberglass reinforcement is designed to withstand internal positive pressure and is inherently weak for external pressure. The designer should thoroughly review the pressure and temperature limitations of a nonmetallic flow line with the manufacturer before installation. Table 2.7 lists API specs covering plastic and fiberglass pipe. Some acronyms are polyethylene (PE), polyvinyl chloride (PVC), FRP, and fiberglass-reinforced thermosetting resin.

2.1.1.7 Valves and fittings

Table 2.8 lists a few key API and ASME standards pertaining to valves, fittings, and related piping elements. API, ASME, and MSS are the most important sources of valve and fittings RAGAGEP for oil field applications. However, API and ASME have many very valuable standards not included in Table 2.8. Company policy and design considerations will dictate the choices of codes where options exist. There is a sizable list of codes, standards, guides, and related documents from API, ASME B16, and MSS for valves and fittings in Appendix 3.

2.1.1.8 Responsibility

The issues of responsibility are generally covered in the introductory parts of any given B31 Code.

2.1.1.8.1 Owner

The "owner" is generally the organization that will own, manage, and operate a facility after construction. For example, in engineering, procurement, and construction (EPC) projects, the organization to which a facility will be turned over is the owner

Table 2.8 Key API and ASME codes for valves, fittings, etc.

API	
SPEC 6A	Specification for Wellhead and Christmas Tree Equipment
SPEC 6D	Specification for Pipeline Valves
RP 14E	Design and Installation of Offshore Production Platform Piping Systems
RP 520, Parts 1	Sizing, Selection, and Installation of Pressure-Relieving Devices in Refineries—Sizing and Selection and Installation
RP 520, Part 2	Sizing, Selection, and Installation of Pressure-Relieving Devices in Refineries—Installation
STD 521	Guide for Pressure-Relieving and De-pressuring Systems
RP 615	Valve Selection Guide
ASME	
B16.5	Pipe Flanges and Flanged Fittings
B16.10	Face-to-Face and End-to-End Dimensions of Valves
B16.34	Valves—Flanged, Threaded, and Welding End
B16.38	Large Metallic Valves for Gas Distribution
B16.47	Large Diameter Steel Flanges: NPS 26-NPS 60

and not a contractor. The owner is responsible for determining which code section applies to the facility (B31.1, B31.3, B31.4, or B31.8). The owner is given a considerable latitude of choice. Along with the responsibility of applying good practice, the owner must establish requirements for design, fabrication, examination, inspection, testing, and anything else the owner deems necessary. Supplemental requirements for safety are mentioned with particular favor. The owner is responsible for designating fluid service (Normal or Category D or M). Category D or Category M Fluid Service cannot be selected without the owner's permission. The owner is also responsible for specifying other service requirements, for example, high-pressure piping (B31.3 Chapter IX), and deciding whether to impose a quality system (if optional). Lastly, the owner must drive actual compliance with the code.

2.1.1.8.2 Designer

The designer (design engineer) is the person or group in charge of design for the piping system. The designer is responsible to the owner for assuring that the piping system engineering and design complies with the requirements of the code. The designer needs to be cautious as the code "is not a design handbook and does not eliminate the need for a designer or competent engineer." The code warns that the designer should inform the owner of fluid service responsibility and may advise as to the appropriate category as the owner may not be knowledgeable.

The qualifications of the designer are listed in Paragraph 301.1. A qualified designer must meet at least one of the following criteria: 1) completion of an engineering degree, or 2) Professional Engineering registration and experience in the design or related pressure piping, or 3) completion of an accredited engineering technician or

associates degree with 15 years' experience in the design of related pressure piping. The designer must be capable of completing rigorous analysis when needed.

2.1.1.8.3 Manufacturer, fabricator, and erector

Manufacturer, fabricator, and erector are vendors and contractors responsible for providing materials, components, and workmanship in compliance with code requirements and best practices. Vendors and contractors often provide substantial engineering design and selection services along with equipment they provide, as part of their work product.

2.1.1.8.4 Owner's authorized inspector

Inspection is the responsibility of the owner. The authorized inspector is the owner's representative and responsible to the owner. The authorized inspector oversees and approves the vendor and contractor's work product and validation. The authorized inspector may be the owner's employee or party authorized by the owner. He insures compliance both with engineering design and with code requirements for material, fabrication, assembly, examination, and testing. The authorized inspector is *not* required to check the design or to perform examinations. Examination may be conducted by an outside party (contractors or vendors). The qualifications for the inspector are listed in the code. The ASME accredits Authorized Inspection Agencies.

Of the eight B31 Codes, engineers and designers typically are the most concerned with B31.1, B31.3, B31.4, and B31.8, especially in oil field applications. The remainder of this text focuses on the above codes with particular emphasis on B31.3.

Appendix Table 3G-1 summarizes selected API, ASME B16, and MSS standards, code, guides, and related documents for valves and fittings. Appendix Table 3G-2 provides a summary guide of selected codes and standards that apply for piping system design and construction.

A more detailed review of the four key sections of B31 follows.

2.2 ASME B31.1 power piping

This code is basically concerned with the effects of temperature and pressure on the piping components.

The scope begins where the boiler ends, at either of the following:

- First circumferential weld joint
- Face of the first flange
- First threaded joint

This piping is referred to as "boiler external piping (BEP)," since it is not considered as part of the boiler. BEP is intimately close, but not part of the boiler—it's pipe. Otherwise, it would be in the BPVC. The rest of the piping system beyond the block valve(s) is the "nonboiler external piping (NBEP)."

Power piping can include steam, water, oil, gas, and air. However, it is not limited to these. There is nothing in the code that prevents one applying B31.1 to other piping systems unrelated to boilers or power generation, as long as they wouldn't be better classified within another section of the piping code that may be more stringent.

B31.1 (§100.1.3) *DOES NOT* apply to the following:

- Components covered by the ASME BPVC
- Building heating and distribution steam and condensate piping if it is designed for 15 psig (1 barg) or less
- Building heating and distribution hot water piping if it is designed for 30 psig (2 barg) or less
- Piping for hydraulic or pneumatic tools (and all of their components downstream of the first block valve off of the system header)
- Piping for marine or other installations under federal control
- Structural components
- Tanks
- Mechanical equipment
- Instrumentation

2.2.1 Pressure design of straight pipe (B31.1 §104.1.2)

This section contains useful formulas for determining either the design pressure of a particular pipe or the required wall thickness of a pipe operating at a certain pressure. The formulas are as follows:

Code Equation 7:

$$t_m = \frac{PD_o}{2(SE + Py)} + A \tag{2.1}$$

Code Equation 8:

$$t_m = \frac{Pd + 2SEA + 2yPA}{2(E + Py - P)} \tag{2.2}$$

Code Equation 9:

$$P = \frac{2SE(t_m - A)}{D_o - 2y(t_m - A)} \tag{2.3}$$

Code Equation 10:

$$P = \frac{2SE(t_m - A)}{d - 2y(t_m - A) + 2t_m} \tag{2.4}$$

where

t_m = minimum required wall thickness, in. (mm)
P = internal design gauge pressure, psig (kPag)

D_o = outside diameter of pipe, in. (mm)
d = inside diameter of pipe, in. (mm)
S = maximum allowable stress values in tension, psi (kPa)
= values in Appendix A, B31.1
E = weld joint efficiency factor listed in Appendix A
F = casting factor listed in Appendix A
A = additional thickness, in. (mm)
y = coefficient used to account for material creep

The values of S, E, and F are shown in Appendix A of ASME B31.1. The weld joint efficiency factor "E" depends on the material used and the method of manufacture. If the material is a cast product, there is no weld. In this case, the casting factor "F" is used. Like the joint efficiency factor, the cast factor depends on the material used and the method of manufacture.

The additional thickness "A" value is used to compensate for

- the material that is removed in fabricating mechanical joints (threading or grooving),
- increased mechanical strength of the piping,
- erosion or corrosion allowance,
- cast pipe tolerances.

For cast pipe, the B31.1 Code specifies the value of "A" to be

- 0.14 in. (3.56 mm) for centrifugally cast pipe,
- 0.18 in. (4.57 mm) for statically cast pipe.

For carbon steels (ferritic steels), $y = 0.4$ at temperatures less than 900 °F (482 °C).

For ferritic and austenitic stainless steels and some nickel alloys, the value ranges from 0.4 to 0.7, depending on temperature. The variation of "y" with temperature allows the wall thickness equation (Equation 2.1) to behave in accordance with the "modified Lamé equation" at low temperatures (with $y = 0.4$) and in accordance with a creep-rupture equation at high temperature (with $y = 0.7$) (*see* B31.1 Section 104 and Table 104.1.2(A)).

For cast iron and nonferrous materials, $y = 0$.

This reduces Equation 2.1 to

$$t_m = (PD_o/2SE) + A \tag{2.5}$$

which is known as Barlow's equation.

The corrosion allowance is entirely up to the discretion of the designer, but a value of 1/16 is commonly used.

2.2.2 Branch connections (B31.1 §104.3)

Branch connections are typically made using fittings designed for a specific application. These fittings are manufactured according to the standards listed in ASME B31.1 Table 126.1.

Sometimes, branch connections are not manufactured but fabricated. For example, if a large bore pipe is used, some branch connections are fabricated and not

manufactured. Common reasons for fabricating a fitting instead of purchasing a manufactured fitting include the following:

- Lack of availability of the specific fitting, for example, a 16 in 304 SS lateral may not be available.
- Cost of the manufactured fitting is very high compared to the ability to fabricate it.
- Cost of making the welds on a manufactured fitting is higher than on a fabricated fitting.

Fittings manufactured in accordance with ASTM standards listed in ASME B31.1 Table 126.1 are satisfactory in meeting code requirements (refer to Section 104.3.1). No further qualifications would be necessary. On the other hand, if a fitting is fabricated, then in order to satisfy the requirements in the code, one would have to follow the requirements contained in Section 104.3.1(D). These requirements specify the extent to which a branch connection must be reinforced. In practice, it is more economical to use manufactured fittings due to the extensive cutting, welding, and reinforcement requirements.

Section 104.3.1(D) relates to branch connections subject to internal pressure. The code designates a region surrounding the intersection known as the "reinforcement zone." The reinforcement zone bounds the region of concern at the branch with a parallelogram. All of the analysis is confined to this zone, and any required reinforcement must fall within this zone.

ASME B31.1 Figure 104.3.1(D) Example B illustrating the various reinforcement areas for a branch connection is shown in Figure 2.7. The discussion of "areas" in this code section refers to the cross-sectional areas in the fitting. The area of the material that is removed when the hole is cut in the run pipe must be offset by material that is present in other components within the reinforcement zone. Credit is given for what is referred to as "excess pipe wall," since piping systems are rarely operated at the maximum design pressure calculated by Equation 2.3 (Code Equation 9) (*see* B31.1 Section 104.1.2). Since piping systems usually use pipe with some inherent excess of pipe wall available in either the run pipe or the branch or both, the code allows one to take this excess pipe wall into account when determining the need for additional reinforcement. The excess pipe wall is the difference between the nominal pipe wall minus the mill tolerance, minus any additional thickness allowance, minus the wall thickness required by Equation 2.1 or 2.2 (Code Equation 7 or 8) (*see* B31.1 Section 104.1.2).

Another place that can make up the amount of material removed by the hole in the run pipe is any excess pipe wall present in the reinforcement zone. This is designated "A_1" for the run pipe (also known as the "header") and "A_2" for the branch pipe. Another source of excess material is the area of the fillet weld, which is designated "A_3."

In some installations, a reinforcing pad is placed around the branch connection to add strength to the joint. The ratio of the width of the reinforcing pad to its height should be as close as possible to 4:1 (within the limits of the reinforcing zone). It should never be less than 1:1. This material area is designated "A_4."

Another method of reinforcing a branch connection is to weld on a saddle. These are limited to use on 90° branches. Their use is not as common as other methods for

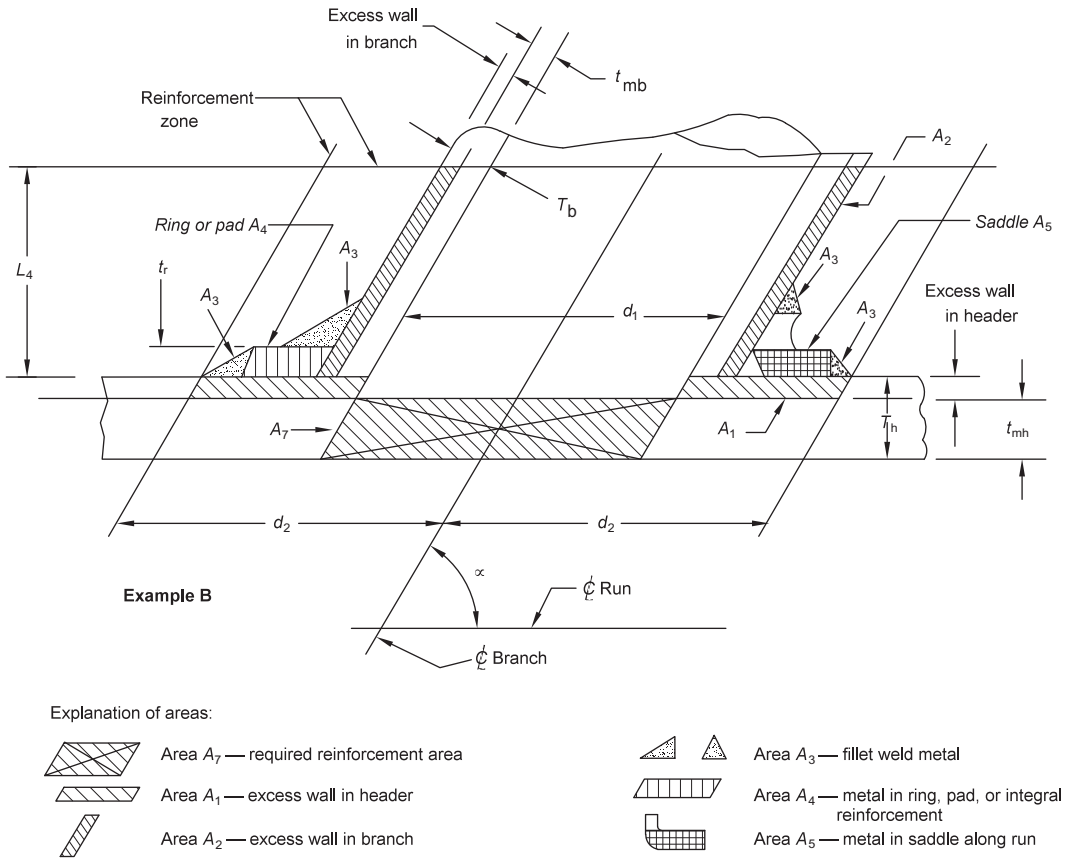

Figure 2.7 ASME B31.1 Figure 104.3.1(D). Example B, illustrating the various reinforcement areas for a branch connection (Courtesy of ASME).

preparing branch connections, but they remain a viable alternative. The metal contained in the saddle along the run pipe in the reinforcement zone constitutes the additional metal that may be used to offset the material lost in cutting the hole in the run pipe. The area of the metal in the saddle along the run pipe is designated "A_5."

There are five areas that can be added together to offset the loss of material created by the hole in the run pipe, which is designated as "A_7." Since the pipe is expected to retain its integrity throughout its design life, the wall thickness expected at the end of the pipe's design life is the thickness that must be used in the calculations. The latest editions of the code call this pressure design area at the end of the service life "A_6" (B31.1 §104.3.1 (D2.2)):

$$A_6 = (t_{mh} - A)d_1 \tag{2.6}$$

where

t_{mh} = required minimum wall thickness in the header (run) pipe
A = additional thickness to compensate for corrosion, erosion, grooving, or threading
d_1 = inside centerline longitudinal dimension of the branch opening in the run pipe, which would be equivalent to the *ID* of the branch pipe if the angle between the axes is 90°. The general form for d_1 is

$$d_1 = (D_{ob} - 2(T_b - A))/\sin\ \alpha \tag{2.7}$$

where (B31.1 Code 2010 edition §104.3.1(D.2))

α = angle between the axes of the run and branch pipes
b, h = the branch and header (or run) pipes, respectively

If the angle between the branch and header pipes is other than 90°, then

$$A_7 = A_6(2 - \sin\alpha) = (t_{mh} - A)d_i(2 - \sin\alpha)$$

If the angle between the axes is 90°, the value for A_7 reduces to

$$A_7 = A_6 = (t_{mh} - A)d_i$$

To satisfy the requirements of Paragraph 104.3.1, the following must be true:

$$A_7 \leq A_1 + A_2 + A_3 + A_4 + A_5$$

Another way of stating this is that the required reinforcement area (refer to B31.1 § 104.3.3(D2.2)) must be less than any combination of the following:

A_1 = area of any excess pipe wall contained in the run
$= (2d_2 - d_1)(T_h - t_{mh})$

A_2 = area of any excess pipe wall contained in the branch
$= 2L_4(T_b - t_{mb})/\sin\alpha$

A_3 = area of any welds beyond the outside diameters of either the run or branch or of weld attachments of pads, rings, or saddles

A_4 = area provided by any rings, pads, or integral reinforcement

A_5 = area provided by a saddle on a right-angle connection
$= (OD \text{ of saddle} - D_{ob})t_r$

2.2.3 Miters (B31.1 §104.3.3)

Miters are acceptable fabricated fittings for pressure piping, provided they are constructed in accordance with the requirements of B31.1 Paragraph 104.3.3. Miters are usually only used in large pipe sizes where manufactured elbows are either unavailable or very expensive. Miters require a significant amount of "fit-up" and welding. If available, it is always easier to purchase a manufactured elbow that conforms to one of the standards listed in ASME B31.1 Table 126.1.

2.2.4 Expansion and flexibility (B31.1 §119)

The calculations for performing a flexibility and stress analysis are very complex and tedious. These calculations are always best performed using computer programs designed to model and analyze piping systems.

Equations 2.8a and 2.8b can be used with caution to "screen" the piping system and determine whether a more complex analysis is required. To use Equations 2.8a and 2.8b with the following conditions, one must comply with the following (B31.1 §119.7):

- The piping system must be of uniform size.
- Equation pertains only to ferrous systems.
- It must be restrained only by two anchors (one at each end with no intermediate anchors).
- It must be less than 7000 cycles during its life. (This is fairly common, and B31.1 considers it "essentially noncyclic service.")
- It should not be used with unequal leg U-bends ($L/U > 2.5$) or near straight "sawtooth" runs.
- It should not be used for large diameter, thin-walled pipe.
- Extraneous displacements (i.e., those not in the direction of the two anchor points) should not constitute a large part of the total displacement.
- Piping should not be operating in the creep range.

If the above conditions are met and Equations 2.8a and 2.8b is satisfied, then the piping system may not require additional stress analysis. However, B31.1 warns that there is no assurance that the terminal (i.e., anchor point) reactions will be acceptably low, even when a piping system meets all conditions above.

Field units

$$\frac{DY}{(L-U)^2} = 30\left(\frac{S_A}{E_c}\right) \tag{2.8a}$$

SI units

$$\frac{DY}{(L-U)^2} = 208{,}000\left(\frac{S_A}{E_c}\right) \tag{2.8b}$$

where

D = nominal pipe size, in. (mm)
Y = resultant of movements to be absorbed by the pipe, in. (mm)
L = developed length of piping, ft. (m)
U = length of a straight line joining the anchors, ft. (m)
E_c = modulus of elasticity at room temperature, psi (kPa)
S_A = allowable displacement stress range per equation
$= f(1.25S_c + 0.25S_h)$
f = cyclic stress range factor for noncorroded pipe
$= 6/N^{0.2} \leq 1.0$
N = total number of equivalent reference displacement stress range cycles expected during the service life of the piping
S_c = basic material allowable stress at the minimum metal temperature expected, psi (kPa)
S_h = basic material allowable stress at the maximum metal temperature expected, psi (kPa)

2.2.5 Pressure tests (B31.1 §137)

Once a piping system has been installed, it is pressure-tested to ensure there are no leaks. Once a system is operating, it is difficult to repair leaks. ASME B31.1 has developed procedures for applying pressure tests to piping systems. The two types of pressure tests used to test a piping system are a hydrostatic test and a pneumatic test. The hydrotest is preferred for the following reasons:

- Leaks are easier to locate.
- A hydrostatic test will lose pressure more quickly than a pneumatic test if leaks are present.
- Pneumatic tests are more dangerous, due to the stored pressure energy and possibility of rapid expansion should a failure occur.

If a piping system cannot tolerate trace levels of the testing medium, then a pneumatic test is preferred.

2.2.5.1 Hydrostatic testing (B31.1 §137.4)

When performing a hydrostatic test, vents are required at high points and drains are required at low points. High-point vents allow the venting of air, which if trapped during the hydrostatic test may result in fluctuating pressure levels during the test period. Low-point drains allow the piping to be emptied of the test medium, usually clean water, prior to filling with the process fluid. If a fluid is used other than water, care should be taken to select a medium that minimizes corrosion.

A hydrostatic test is to be held at a test pressure not less than 1.5 times the design pressure. The piping system should hold the test pressure for no less than 10 min, after which the pressure may be reduced to the design pressure while the piping system is

examined for leaks. A very accurate "test gauge" should be used to measure any loss of pressure due to leaks, especially if portions of the system are not visible for inspection.

2.2.5.2 Pneumatic testing (B31.1 §137.5)

When performing a pneumatic test, it is imperative to use a test medium that is nonflammable and nontoxic. Compressed air is most often used but nitrogen can also be used. Since compressed air often contains both oil and water, care must be exercised when specifying an appropriate test medium.

A preliminary pneumatic test is normally recommended by holding the test pressure at 25 psi (175 kPa gauge) to locate leaks prior to testing at the test pressure. The test pressure for pneumatic tests is to be held at least 1.2 but not more than 1.5 times the design pressure. The pneumatic test must be held at least 10 min, after which it must be reduced to the lower of the design pressure or 100 psig (700 kPa gauge) until an inspection for leaks is conducted.

2.3 ASME B31.3 process piping

2.3.1 Organization

This code is similar to B31.1 in that it is organized into chapters, parts, and paragraphs. The code consists of nine chapters. The first six chapters are what is called the "base code." It provides the basic piping code requirements for Normal and Category D Fluid Service metallic piping. Chapter VII contains rules for nonmetallic piping and additional requirements for metallic piping lined with nonmetals. Chapter VIII contains rules for piping in Category M Fluid Service. Chapter IX contains rules for high-pressure piping. This chapter is never a required selection. It is always the option of the owner to select the use of Chapter IX. The code provides guidance by stating that high pressure can be considered to refer to over Class 2500 flanges. This is not a requirement and the base code may be satisfactorily used to pressures higher than this. Finally, Chapter X contains rules for piping designated by the owner as being in High Purity Fluid Service, for which the owner requires high-purity, ultrahigh-purity, hygienic, or aseptic service to provide a controlled level of cleanness. This part of the code is unlikely ever to be a concern for oil and gas operations.

The paragraphs in the code follow a specific numbering system. The paragraphs of B31.1 are numbered in the 100s and those in B31.3 are numbered in the 300s. This convention follows throughout the B31 Codes. The paragraph numbers in the base code are repeated from Chapters VII to IX. These paragraphs are differentiated by a letter placed in front of the paragraph numbers in each case. Chapter VII uses the letter "A," Chapter VIII uses the letter "M" for metallic piping and "MA" for nonmetallic piping, Chapter IX uses the letter "K," and Chapter X uses the letter "U" for metallic piping and "MU" for nonmetallic piping. Using the same paragraph numbers allows easy cross-referencing between each of the last three chapters and the base

code requirements. The last three chapters refer back to the base code requirements whenever they are applicable.

2.3.2 General considerations

The B31.3 Code was written as a solution to multiple boiler explosions caused by unsafe design and construction practices. The primary goal of the B31.3 Code is safety. Safety is obtained by instituting engineering requirements found necessary to provide safe design and construction practices. In addition, prohibitions and cautions about unsafe designs and practices are given within the code. Additionally, the B31.3 Code introduces a listing of suitable materials with their allowable stress at various temperatures and numerous notes providing additional information and limits on the use of a given piping material.

The B31.3 Code includes a table of standards that include acceptable components for use with B31.3 Code piping systems. An example of such a standard is ANSI B16.5 that covers the dimensions, materials of construction, and the pressure-temperature ratings of common types of flanges and flanged fittings ranging from ½″ (13 mm) to 24″ (600 mm) used in plant piping. ASME B16.5 is only one of the many listed standards in B31.3. There are also references to other ASME codes where required in the body of B31.3.

The B31.3 Code provides guidance in determining safe piping stress levels and design life; weld examination requirements, required welding procedures, and welder qualifications; and pressure test requirements for piping systems using hydrostatic test, pneumatic test fluids, leak testing, and others. The requirements are based on intended use.

ASME B31.3 is not a design guide. The "Introduction" states that "The Code sets forth engineering requirements deemed necessary for safe design and construction of pressure piping. While safety is the basic consideration, this factor alone will not necessarily govern the final specification for any piping installation." Also, "The designer is cautioned that the Code is not a design handbook; it does not eliminate the need for the designer or competent engineering judgment."

Any code would be unusable when the equations specified were overly complicated and difficult to apply. Codes would be of little use if their techniques and procedures were difficult to understand even for the piping engineer, not to mention other technical disciplines involved in the construction of piping. Designers who are capable of applying a justified modern engineering analysis are not restricted to the simplified approach given in B31.3.

Sometimes, a plant owner may have to decide which code section to use for a particular plant. Two different codes, for example, may have somewhat overlapping coverage where either may be suitable. For example, waste heat boiler piping might be designed to either B31.1 or B31.3. Since either of the two codes could be applied to the construction of the piping system, the choice will depend on the following two questions that must be addressed by the owner: How long of a life does the owner require? What is the level of piping reliability desired by the owner? Piping systems designed

to B31.3 generally have a life of about 30 years while those designed to B31.1 routinely are expected to have a life of about 40 years.

ASME B31.3 allows the use of a *3 to 1* implied safety factor while B31.1 allows a *4 to 1* implied safety factor. Therefore, B31.1 will require a thicker pipe wall than B31.3 for identical service conditions. Factors of safety as used here are determined by the ultimate tensile strength (UTS) divided by the factor, meaning that piping constructed to B31.3 can operate 1/3 of its UTS based on the maximum design operating temperature.

When designing to the code, the designer must have a working knowledge and understanding of the code that applies to the work. This will help when applying the "intent" of the code. A few of the basic considerations are shown below.

2.3.2.1 Principal axis and stress

The analysis of piping loaded by pressure, weight, and thermal expansion can appear to be rather complicated and difficult to accomplish. This complexity is simplified when the analyst has a basic understanding of the principal axis system. The principal axis system analysis method can be found in engineering mechanics course books.

2.3.2.2 Radial principal stress

This stress acts on a line from the center of the pipe radially to the pipe wall. This is a compressive stress acting on the pipe inside diameter caused by internal pressure or in the reverse a tensile stress caused by vacuum service.

2.3.2.3 Circumferential principal stress

This stress is sometimes called hoop or tangential stress. It acts on a line perpendicular to the longitudinal and radial stresses. This stress tends to separate the pipe wall in the circumferential direction and is caused by internal pressure.

When two or more principal stresses act at a point on a pipe, a shear stress will be generated. One example of a shear stress would be a pipe support where radial stress caused by the supporting member acts in combination with the longitudinal bending caused by the pipe overhang.

The code presents equations for determining the stress levels in a piping system and also provides allowable stress limits for comparison (see Paragraphs 302.3.5 and 319.4.4 for examples). These code equations are based on failure theories. A review of these theories is helpful in gaining a greater understanding of the intent of the code. These theories are the *maximum principal stress failure theory* and the *maximum shear stress failure theory*.

The maximum principal stress failure theory states that when any one of the three mutually perpendicular principal stresses exceeds the yield strength of the material at temperature, a failure will occur. Of the three principal stresses in piping induced by internal pressure, the *circumferential will normally be the governing stress*.

For straight piping sections, this is the first consideration in B31.3. Applying the maximum principal stress theory to this piping condition, the circumferential principal

stress would be the only stress of a major concern. This means that a required wall thickness must be calculated and piping selected that will provide for a level of hoop stress below the yield strength of the piping material at the maximum operating pressure (MOP) and temperature for the piping under consideration.

2.3.2.4 Stress categories

The B31.3 Code provides design guidance for *primary* and *secondary* stresses. Although the code user will not find these terms listed or discussed in the code text, a fundamental understanding of these terms is essential in applying the code equations to calculate the stress levels in piping systems and to compare these calculated stresses to the code allowable stresses.

A primary stress is a principal stress, shear stress, or bending stress generated by imposed loadings that are necessary to satisfy the simple laws of equilibrium or internal and external forces and moments. The basic characteristic of a primary stress is that it is not self-limiting. As long as the load is applied, the stress will be present and will not diminish with time or as deformation takes place. The failure mode of a primary stress is gross deformation progressing to rupture. Examples of a primary stress are circumferential stresses due to internal pressure and longitudinal bending stresses due to gravity. Figure 2.8 shows a section of electric resistance welded (ERW) pipe that failed while in service. Figure 2.9 shows an elbow failure due to circumferential primary stress during a routine hydrostatic test.

A secondary stress is a principal stress, shear stress, or bending stress caused by structural restraints such as flexibility controls or by constraint of the pipe itself. The basic characteristic of a secondary stress is that it is self-limiting. As this stress condition develops in a piping system, local yielding will occur, thus reducing these stresses. An example of a secondary stress is the bending of an elbow that joins two lengths of pipe subjected to a temperature increase. As the piping reaches its operating

Figure 2.8 ERW pipe seam failure.

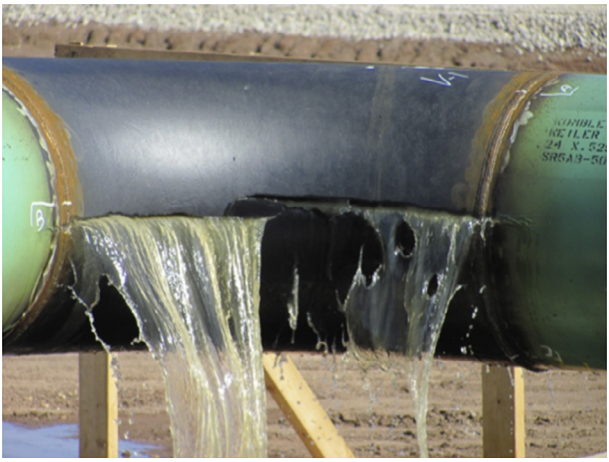

Figure 2.9 Elbow failure during routine hydrostatic test.

temperature, the bending strain (stress) in the elbow will reach a maximum magnitude and the strain (stress) will stabilize. Thus, the condition causing the stress to increase stops; the elbow, now in this new higher stressed state, will in time experience local yielding or deformation that will reduce the stresses in the elbow. One can see from this example that secondary stresses in a piping system are associated with cyclic conditions such as temperature increase or decrease, and although not specifically discussed in B31.3, it is worthy of being added to the list of definitions.

Pear stresses are those stresses that are caused by local discontinuities such as welding flaws or pipe wall thickness differences such as pipe wall mismatch; this happens when the pipe is subjected to a primary or secondary stress loading. Peak stresses are stress concentration points that can cause crack initiation contributing to an eventual fatigue failure.

2.3.2.5 Definition and basis for allowable stress, S_c and S_h

Understanding the term *allowable stress* is essential when discussing the piping codes. There is a code allowable stress for pressure design; others for pure compression, shear, and tension (B31.3 §302.3); and still another for thermal displacement stresses calculated from equations using the terms "S_c" and "S_h." To increase the understanding of the use of these allowable stress equations and terms, a review of the basis of these two terms will be beneficial.

The allowable stress for a piping system or a piping component material is based on a function of the yield or tensile strength of the material at cold to moderate temperatures or is based on creep rates or stress for rupture in elevated temperature service. The term "S_c" is the allowable stress for a material at the *cold* condition, which includes cryogenic service or ambient installed temperature for elevated temperature service. The term "S_h" is the allowable stress for the material in the *hot* operating condition, which would be the design temperature for elevated temperature service or

ambient for cold or cryogenic service. The values for S_c and S_h are tabulated in B31.3 Code Appendix A Table A-1 for most materials used in refinery piping service. These values are the same as those of the ASME BPVC, Section VIII, Division 2 (as published in ASME BPVC, Section II, Part D), using a 3 to 1 safety factor for temperatures below the creep range.

Notes for Appendix A precede the tables and are referenced by numbers at the top of the table columns and also in the body of the table. Most of these notes are precautionary but some are prohibitive, but all should be read when utilizing the tables in design.

Generally, creep range temperatures are those above 700-800 °F (371-427 °C). Table A-1 values for temperatures below the creep range is the lowest of the following conditions for a given material:

- 2/3 of the specified minimum yield strength at room temperature.
- 2/3 of the yield strength at temperature.
- For austenitic stainless steels and certain nickel alloys, this value may be as large as 90% of the yield strength at temperature (B31.3 §302.3.2(e)). Figure 2.10 illustrates how the allowable stress decreases for two materials as temperature is increased. Notice for the ASTM A53 Grade B material how the decrease in allowable stress becomes nonlinear as temperature exceeds 700 °F (371 °C). The stainless material displays this nonlinear characteristic as the temperature exceeds 900 °F (482 °C). This nonlinearity is representative of the code allowable stress limitations imposed on these materials at creep range temperatures.

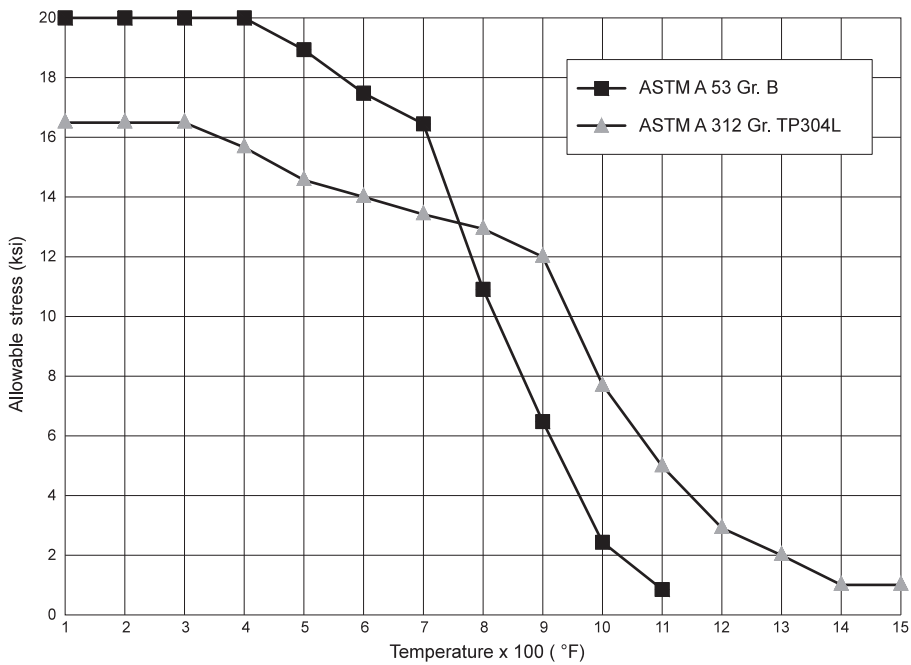

Figure 2.10 Temperature creep range.

2.3.3 Fluid services (B31.3 §300.2)

The code includes three categories of fluid service. The fluid category provides a means to differentiate between the degrees of hazard arising from the fluid medium itself, rather than from the design conditions or type of piping. For example, a Category D Fluid Service is a lower hazard and requires less stringent design, examination, and testing while a Category M Fluid Service is more hazardous and requires more stringent requirements. All fluid services are considered "Normal" unless the owner designates them as Category D or Category M.

The fluid service is assumed to be "Normal Fluid Service" unless a different selection is made. The "owner" is responsible for selecting the fluid service category. Selections of Category D or Category M Fluid Service cannot be made without the owner's permission. Since some owners may not be familiar with this responsibility, the piping designer should inform the owner of the responsibility and may offer advice as to what fluid service category is appropriate.

Category D Fluid Service is less hazardous and includes fluids that are nontoxic, nonflammable, and not dangerous to the human tissue and are at a pressure less than 150 psi (1035 kPa) and temperature from −20 °F (−29 °C) to 366 °F (186 °C). Chapter 1 under "Fluid Service" describes a fluid that could cause irreversible damage to the skin, eyes, or mucous membranes unless the fluid is properly flushed away with water or medication or antidotes are administered promptly. The Occupational Safety and Health Administration 29 CFR 1910.151 states that "… where the eyes or body of any person may be exposed to injurious corrosive materials, suitable facilities for quick drenching or flushing of the eyes and body shall be provided within the work area for immediate emergency use." In many facilities, one will see eyewash stations or emergency showers or a device that is a combination of both. The ANSI has developed voluntary standard ANSI Z358.1 that recommends, among other things, that the shower be no more than 10 s walking time away from the location of the hazard without requiring the use of steps or ramps; that the water should be tepid, unless this would create an additional hazard due to acceleration of chemical reactions; and that the water be disposed of in a manner that will not create additional hazards. An important distinction is that it is the condition of the fluid on leakage, not in the pipe, that must be considered.

Category M Fluid Service is used for extremely hazardous fluid services such as methyl isocyanate. Systems containing H_2S are not typically designated as Category M Fluid Service. It is not possible to create a list of Category M Fluid Services because the conditions of the installation must be considered in making the classification. For a fluid service to be Category M, the potential for personnel exposure must be judged to be significant. For example, if a piping system is double contained, it could be judged that even highly toxic fluids do not make the system Category M, since the potential for personnel exposure is not significant. For Category M Fluid Service, the rules for Normal Fluid Service are not applicable. Instead, additional rules that lead to more costly construction, with provisions designed to enhance piping system tightness, are provided in Chapter VIII.

The code considers many very hazardous fluid services to be Normal Fluid Service. Most of the piping covered by B31.3 pertains to Normal Fluid Service, that is, fluids not

subject to the rules for Category D, Category M, Elevated Temperature, High Pressure, or High Purity Fluid Services. The design and construction rules for Normal Fluid Service are suitable for hazardous services. Category M provides a higher level. If higher-integrity piping is desired by the owner, even though the fluid service does not meet the definition of Category M, the owner can still specify the additional design, construction, examination, and testing requirements that are provided in Chapter VIII.

Figure 2.11 illustrates a flowchart provided in ASME B31.3, Appendix M, Guide to Classifying Fluid Services. This appendix is considered by the code to provide guidance, not code requirements.

2.3.4 Scope (B31.3 §300.1)

ASME B31.3 is the accepted worldwide standard for process piping. It is the *de facto* standard for piping for oil, petrochemical, and chemical industries. To facilitate its international use, ISO 15649, "Petroleum and Natural Gas Industries—Piping," has been approved. This ISO makes a reference to ASME B31.3. It is an evergreen reference, as it is not tied to a specific edition. The ISO also provides additional technical requirements, such as provisions for buried pipe.

To facilitate the international use of ASME B31.3, as referenced by ISO 15649 (Petroleum and Natural Gas Industries—Piping), in Europe, a guide was prepared by EEMUA. This guide is entitled "Guide to the Use of ISO 15649 and ANSI/ASME B31.3 for Piping in Europe in Compliance with the Pressure Equipment Directive (PED)," providing specific guidance on how to comply with the European PED while using ISO 15649. Following this guide does not provide a presumption of conformity with PED; therefore, the conformity assessment requirements of the PED must be followed in full.

Within the United States, ASME B31.3 is the recognized standard for process piping. The ASME B31.3 Code was written with process piping in mind. It is very broad in scope, reflecting the scope of process piping services. Examples of the types of facilities that ASME B31.3 is intended to cover are the following:

- Oil- and water-handling facilities
- Gas-handling, conditioning, and processing facilities
- Petrochemical plants
- Oil refineries
- Loading terminals
- Bulk processing plants
- Cryogenic piping

In the past, the code was intended to cover all piping within the property limits of a process plant, with certain exclusions. The ASME B31 Codes now state that it is the owners' responsibility to decide which code is most applicable to their piping system. The following items were excluded from coverage by earlier editions of ASME B31.3:

- Fire protection systems
- Sanitary and storm water systems
- Plumbing

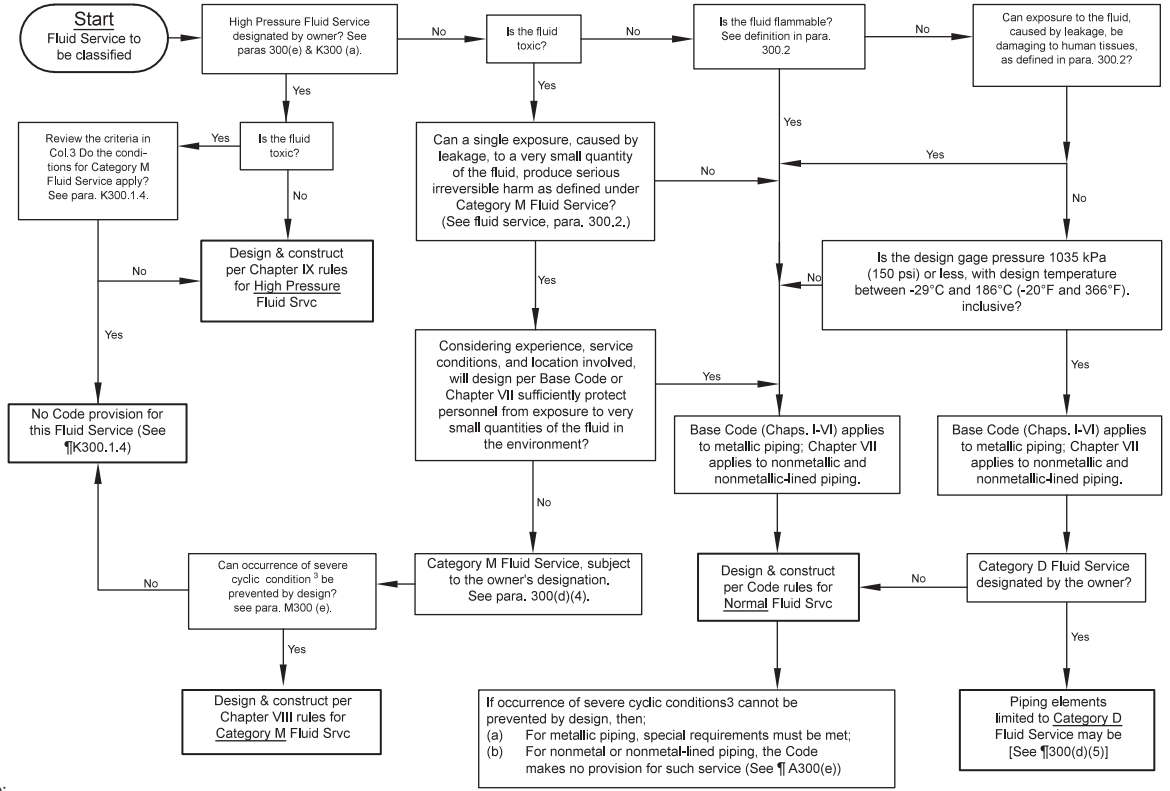

Note:

(1) See paras. 300(b)(1). 100(d)(4) and (5), and 300(e) for decisions the owner must make. Other decisions are the designer's responsibility: see Paragraph 300(b)(2).

(2) The term "fluid service" is defined in Paragraph 300.2.

(1) Severe cyclic conditions are defined in Paragraph 300.2. Requirements are found in Chapter II, Parts 3 and 4, and in Paragraphs 323.4.2 and 241.4.3.

Figure 2.11 Fluid service flowchart
(Courtesy of ASME B31.3, Appendix M, 300.2).

- Piping in property set aside for transportation piping (ASME B31.4, B31.8, and B31.11)
- Piping within the jurisdiction of Section I of the ASME "BPVC" (i.e., BEP)

The following were considered optional:

- Steam piping from a boiler that is outside the jurisdiction of ASME BPV, Section I, which could be either ASME B31.1 or ASME B31.3
- Refrigeration piping that is part of a packaged system (factory-assembled), which could be either ASME B31.5 or ASME B31.3

The piping between a boiler casing and the first block valve outside of the boiler is considered BEP. This is within the jurisdiction of ASME BPVC Section I, although Section I refers to the rules of ASME B31.1 for piping.

The code excludes low-pressure piping systems from its scope, if they meet all of the following conditions:

- The pressure is less than 15 psi (105 kPa).
- The pressure is not less than zero (i.e., no vacuum condition).
- The fluid is nonflammable, nontoxic, and not damaging to human tissue.
- The temperature is not less than −20 °F (−29 °C).
- The temperature is not greater than 366 °F (186 °C).

In addition to the low-pressure piping exclusion above, the scope specifically excludes the following (*see* B31.3 §300.1.3):

- Power boilers in accordance with ASME BPVC Section I and BEP required to conform to B31.1
- Tubes, tube headers, crossovers, and manifolds inside fired heaters
- Pressure vessels, heat exchangers, pumps, compressors, and other fluid handling or processing equipment

2.3.5 Responsibilities

2.3.5.1 Owner

It's the owner's responsibility to determine which code should be used. The owner has overall responsibility within the ASME B31.3 Code for compliance with the code and for establishing the requirements for design, fabrication, examination, inspection, and testing. In addition, the owner is responsible for designating the fluid service if they require Category D or M and selecting Chapter IX if they wish it to be used for high-pressure piping.

The owner is the organization that will own and operate the facility after its construction. For example, in an EPC project, the owner is not the contractor but the organization to which the facility will be turned over.

2.3.5.2 Designer

The designer is responsible to the owner for assuring that

- the engineering design of the piping complies with the requirements of the code and
- the owner's additional requirements are met.

The designer is the person who is in charge of the design of the piping system. Qualifications for the designer are listed in Paragraph 301.1. Qualifications include a combination of education or Professional Engineering Registration and experience in the design of pressure piping. Experience that includes design calculations for pressure, sustained and occasional loads, and piping flexibility is considered to satisfy the experience requirement. The number of years of experience is not specified for engineers with Professional Engineering registration.

2.3.5.3 Manufacturer, fabricator, and erector

The manufacturer, fabricator, and erector of piping are responsible for providing materials, components, and workmanship in compliance with the requirements of the code and of the engineering design. Additional design requirements stipulated by the owner become requirements of the code for that particular installation.

2.3.5.4 Owner's inspector

The owner's inspector is responsible to the owner for assuring the requirements of the code for inspection, examination, and testing are satisfied. The inspector is the owner's representative and oversees the examination and testing performed by the contractor. The inspector is not required to perform examinations or check design. Qualifications for the inspector are listed in Chapter V of the code.

2.3.6 Design conditions (B31.3 §301)

Before applying the rules of the code construction of a piping system, the design conditions and requirements must be determined. When they are determined, these conditions become the basic data of a system's design requirements. This section requires the designer to consider the various pressures, temperatures, and loads that the piping system may be subject to.

2.3.6.1 Design pressure (B31.3 §301.2)

When determining the design pressure, all conditions of internal pressure must be considered. These include thermal expansion of trapped fluids, surge, and failure of control devices. The design pressure can be significantly affected by the method to protect the piping system from overpressure. If overpressure is not provided, then the piping system must be designed to safely contain the maximum pressure that can occur in the piping system, including consideration of failure of any and all control devices. Such pressures could be, for example, shut-in tubing pressure or maximum pump discharge pressure.

2.3.6.2 Overpressure protection (B31.3 §301.2.2)

The requirements are provided in Paragraph 301.2.2 and the requirements for pressure safety valves are provided in Paragraph 322.6 "Pressure Relieving Systems." The piping system must be designed to either safely contain the maximum possible pressure, considering factors such as control devices and surge, or protected by overpressure protections, such as pressure safety valves or rupture disks.

If a pressure-relieving device is used, B31.3 refers to the requirements of ASME BPVC, Section VIII, Division 1. The design pressure is substituted for MAWP because the MAWP term is not used in the B31 Code. The set pressure requirements of the ASME BPVC, Section VIII, Division 1 are not followed. If they were, then the variations could never be permitted because any variation in pressure above the design pressure would result in the opening of the pressure safety valve. Rather than limit the set pressure to the design pressure, B31.3 Code allows the set pressure to be any value, as long as the maximum pressure during the relieving event does not exceed one of the following two alternatives:

- Maximum relieving pressure permitted by the ASME BPVC, Section VIII, Division 1
- Maximum pressure permitted in the allowances for variations provisions of ASME B31.3

The owner's approval is required for the set pressure to exceed the design pressure.

For thermal relief devices, the set pressure may be set at 120% of the design pressure, without any requirement for owner's approval nor any need to comply with the additional requirements to use the allowances for variations. The set pressure can be set at higher than 120%; but then, the other requirements of justification and approvals must be satisfied. Isolation block valves are allowed on the inlet and outlet of relief devices with certain limitations (refer to Paragraph 322.6.1).

The design pressure of each component in a piping system shall be not less than the pressure at the most severe condition of coincident internal or external pressure and temperature (minimum or maximum) expected during service, except as provided in B31.3 §302.2.4.[1]

2.3.6.3 Design temperature (B31.3 §301.3)

The metal temperature is of interest when establishing the design temperature. For B31.3, the design temperature does not coincide with the process fluid temperature.[2] In addition to process fluid temperature, the designer must also consider ambient cooling, ambient heating, solar radiation, and maximum heat-tracing temperature.

If the piping is insulated, the metal temperature is generally considered to be the process fluid temperature, unless there is an external temperature that could heat

[1] B31.3 §302.2.4 addresses deviations from the norm and how to address those issues (cited below for clarity).

[2] Contrast this with B31.1 §, where "design temperature shall be assumed to be the same as the fluid temperature unless calculations, or tests support the use of other data…."

Table 2.9 What T_{Design} to use where $T_{Process\ Fluid} > 150$ °F (65 °C)

Un-insulated piping component	T_{Design}
Pipe, valves, lapped ends, welded fittings, other components (with wall thickness comparable to that of pipe)	95% of $T_{Process\ Fluid}$
Flanges (except lap joint flanges) (including fittings and valves)	90% of $T_{Process\ Fluid}$
Lap joint flanges	85% of $T_{Process\ Fluid}$
Bolts	80% of $T_{Process\ Fluid}$

See B31.3 Paragraph 301.3.2(b).
(Courtesy of ASME B31.3)

the pipe, such as steam tracing. If the pipe is uninsulated, the metal temperature is taken as the process fluid temperature if the temperature is below 150 °F (65 °C), unless some other effects, such as solar heating of the pipe, could result in a greater temperature. A temperature of 120 °F (50 °C) is usually assumed for solar heating for piping exposed to the sun. That said, local conditions may dictate using a higher temperature, for example, Saudi Arabia. For internally insulated pipe, such as refractory-lined pipe, the metal temperature must be determined by heat transfer calculations or test. The heat transfer calculations should consider the appropriate range of wind conditions and ambient temperatures to which the pipe will be subjected.

For fluid temperatures at or above 150 °F (65 °C) where wall temperatures have not been determined by testing or by heat transfer calculations, piping system design temperatures for uninsulated components are set according to various percentages of fluid temperatures as shown in Table 2.9.

2.3.6.4 Design minimum temperature

The design minimum temperature is required to determine the impact test requirements of ASME B31.3. The notch toughness of a material decreases as the temperature decreases. To avoid brittle fracture, Charpy V-notch impact tests are required at low temperature and high stress to ensure that the material has adequate toughness. When determining the minimum temperature, the designer must consider the lowest component temperature that can be expected while in service. This can include low ambient temperatures and autorefrigeration.

2.3.6.5 Uninsulated components (B31.3 §301.3.2)

This paragraph describes how to determine the design temperature of uninsulated piping and components. The instructions indicate that for fluid temperatures below 150 °F (65 °C), the component temperature shall be taken as the fluid temperature unless solar radiation or other effects result in a higher temperature. For fluid temperatures above 150 °F (65 °C), the component temperature shall be no less than a certain percentage of the fluid temperature.

2.3.7 Design criteria (B31.3 §302)

This paragraph states pressure-temperature ratings, stress criteria, design allowances, and minimum design values together with permissible variations of these factors as applied to the design of piping.

B31.3 has Tables 326.1 and A326.1 and K326.1 that correspond to ASME B31.1 Table 126.1. Comparing those tables reveals that Tables 126.1 and 326.1 focus more on steel pipe and fittings while Table A326.1 also discusses nonmetallic pipe and fittings. The reason for this is that B31.3 deals with process piping for corrosive fluids in which case thermoplastics, thermosetting plastics, and resins are more appropriate materials for the fluids handled.[3]

The code states that if components (flanges, valves, fittings, bolts, etc.) listed in Table 326.1 are rated for a specific pressure-temperature condition, then they are suitable for the design pressures and temperatures allowed in B31.3. If there is no specific pressure-temperature rating, but are instead based on the ratings of straight seamless pipe, then the component must be derated by 12.5%, less any mechanical and corrosion allowances.

Designers must be aware that more than one design condition may exist in any single piping system. One design condition may establish the pipe wall thickness and another may establish the component rating, such as for flanges. Once the design pressure and temperature have been determined for a system, the question is: Can these conditions ever be exceeded by code rules? The answer is yes, they can be exceeded, under certain specific conditions.

In the normal operation of a piping system, there may be a requirement, on occasion, to operate at a higher than design condition, such as the regeneration of catalyst, to steam out a line or other short-term conditions that may cause temperature-pressure variations above the original design. Rather than base the design pressure and temperature on these short-term operations, the code provides conditions to permit these variations to occur without becoming the basis of the entire piping system design.

2.3.8 Allowances for pressure and temperature variations (B31.3 §302.2.4)

The code doesn't use the term "maximum allowable working pressure (MAWP)." However, it is useful when discussing the allowances for variations. The pressure design of piping systems is based on the design conditions. Increases in pressure and temperature above the design conditions are permitted for short-term events, as long as several conditions are satisfied, one of which is that the MAWP is not exceeded by more than a certain percentage. Thus, the variation can be much higher than the design conditions, yet remain permissible.

[3] B31.3 §M326.1, §MA326.1, and §K326.1 and Chapter X Part 8 all say that dimensional standards and specifications for Normal piping also apply for Category M toxic and hazardous fluid service, for high-pressure fluid service, and for high-purity fluid service, except where otherwise prohibited or restricted.

The following conditions are requirements for use of these variations (B31.3 § 302.2.4):

- Piping system shall not have pressure-containing components of cast iron or other nonductile metal.
- Nominal pressure stress (hoop stress for straight pipe or, for rated components, the pressure divided by the allowable pressure times 2/3 the yield strength) must be less than the yield strength of the material.
- Longitudinal stresses must be within the normal permitted limits.
- The total number of pressure-temperature variations above the design conditions must be less than 1000 over the life of the system. (*Note:* This is the number anticipated in the design of the system, not some count taken during operation of the system. ASME B31.3 Code is for the design of new piping systems.)
- The maximum pressure must be less than the test pressure; this can be a limitation if pneumatic or alternative leak testing was used.

If the above conditions are met and if the owner approves, the pressure rating or allowable stress (essentially the MAWP) may be exceeded by

- 33% for events that are not more than 10 h at any one time nor more than 100 h per year (continuous 12-month period) and
- 20% for events that are not more than 50 h at any one time nor more than 500 h per year.

The variation in temperature decreases the allowable stress or pressure rating. Thus, the stress or pressure may exceed the allowable value during a variation in temperature, without a change in pressure.

If the above variations are used, the designer must determine that the piping system, including the effects of the variations, is safe over the service life of the piping, using methods that are acceptable to the owner. The pressure test provides such assurance for piping operating below the creep regime. For piping at elevated temperatures, within the creep regime for the material of construction, the pressure test does not ensure a long-term pressure integrity. Appendix V of ASME B31.3 provides a mechanism to evaluate the effect of short-term variations at elevated temperature on the life of the piping system.

2.3.9 Additional design considerations (B31.3 §301.5.4)

In addition to the design temperature and pressure, there are several other considerations of design that must be addressed to ensure a safe operating piping system. The code lists several of these considerations beginning with B31.3 §301.5.4 and provides a good explanation of each. However, there are two considerations for which the explanation should be expanded.

2.3.9.1 Vibrating pipe (B31.3 §301.5.4)

The guidance presented in the code for checking cyclic stress levels is based on low cycle, high stress. In a vibrating system, the stress concern is high cycle, low stress. A clarification of what is meant by high and low cycles is in order. The code allowable

stress range for cyclic stresses, S_A (B31.3 §302.3.5), is based in part on the number of thermal or equivalent cycles the system will experience in the plant life.

Table 302.3.5 of the code tabulates a factor used to determine S_A, called the stress range reduction factors ("*f*"). "*f*" ranges from 1.0 for 7000 cycles or less (7000 cycles is about one cycle per day for 20 years) to 0.3 for cycles up to 2,000,000.

The intent of the code is to provide an allowable stress reduction factor for the secondary stress cycles expected in the lifetime of the plant. A vibrating piping system can easily experience more than 500,000 stress cycles in a single day. Clearly, the stress range reduction factor-allowable stress range philosophy is not applicable for vibrating piping systems. The code does not address high cycle-low stress piping life in vibrating systems.

2.3.9.2 Analyzing a vibrating pipe

To analyze a piping system for vibration, one needs to estimate the number of vibrating cycles expected during the life of the plant. To do this, one enters the ASME BPV Code design fatigue curves for the pipe material to determine if the stress-cycle intersection point will be below the fatigue curve. If it is, the vibrating system should last the design life of the plant. Design fatigue curves are presented in Mandatory Appendix 5 of the ASME BPVC, Section VIII, Division 2.

As an example, use the above guidance to determine the life cycle of a carbon steel elbow where S_E has been calculated to be 30,000 psi. The fatigue curve for carbon steel operating at temperature service not over 700 °F (371 °C) is shown in Figure 2.12. Enter the curve at 30,000 psi and intersect the UTS < 80 line that yields a cycle life of about 35,000 cycles. Typical vibrating stresses would be in the range of 1000-2000 psi. Another graph covering that stress and cycle range would have to be selected to address life cycle of a lower stress range.

2.3.9.3 Water hammer (B31.3 §301.5)

Water hammer, a surge pressure, is a piping system design consideration where the designer can find assistance in the AWWA Steel Pipe Manual (AWWA M11) in predicting the pressure rise in a liquid system caused by rapid valve closure. The pressure rise ("*P*") for instantaneous valve closure is directly proportional to the fluid velocity ("*V*") cutoff and to the magnitude of the surge wave velocity ("*a*") and is independent of the length of the pipe. This is shown in the following equation:

$$P = \frac{aWV}{144g}$$

$$a = \frac{12}{\sqrt{\left(\frac{W}{g}\right) \times ((1/k) + (d/Ee))}} \text{fps}$$

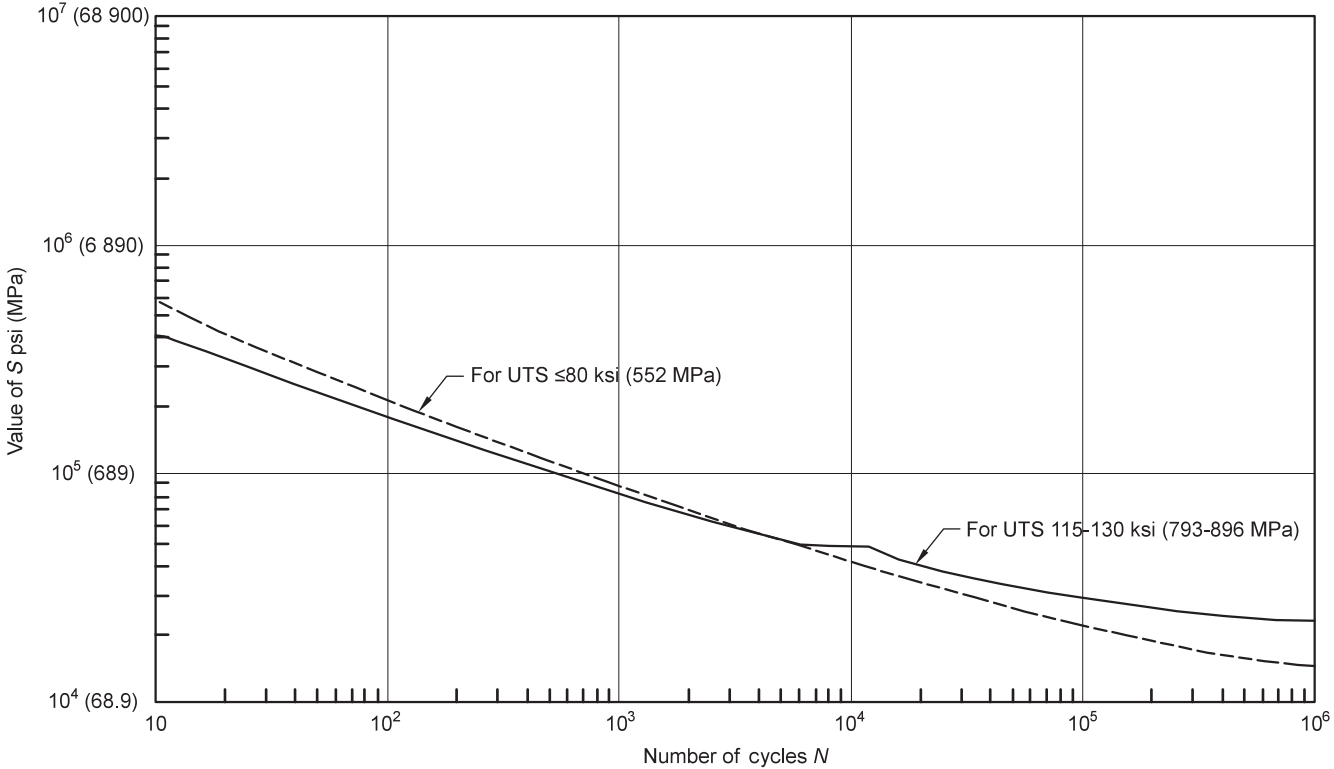

General notes:
(a) E=30 x 10^5 psi (206 x 10^3 MPa)
(b) Interpolate for UTS 80-115 ksi (552-793 MPa)
(c) Table s-110.1 contain tabulated values and a formula for an accurate interpolation of these curves

Figure 2.12 Fatigue curve for carbon steel operating temperature service not over 700 °F (371 °C).

where

a = wave velocity (fps)
P = pressure rise above normal (psi)
V = velocity of flow (fps)
W = weight of fluid (lb/cu ft)
k = bulk modulus of elasticity of pipe material (psi)
E = Young's modulus of elasticity of pipe material (psi)
d = inside diameter of pipe of pipe (in.)
e = thickness of pipe wall (in.)
g = acceleration due to gravity (32.2 fps/s)

For steel pipe,

$$a = \frac{4660}{\sqrt{(1 + (d/100e))}} \text{fps}$$

As an example, assume a rapid closing check valve closes at 36 in. ($OD = 0.375$) in wall thickness pipe with water velocity of 4 fps ($k = 294{,}000$ psi), $E = 29{,}000{,}000$ psi, and $W = 62.4$ lb/cu ft. Determine the instantaneous pressure rise above the operating pressure. Substituting into the equation

$$a = 3345 \text{ fps}$$

$$P - 180 \text{ psi pressure rise above normal}$$

The pressure rise acting at the closed valve in the piping system can exert a force equal to pressure times the cross-sectional area of the pipe or about 175,665 pound, which can cause an unrestrained pipe to move from its normal position.

2.3.10 Quality factors (B31.3 §302.3)

The quality factors for weld joints are provided in B31.3 Code Table A-1A and Table A-1B and vary from 0.6 to 1.0. Table A-1A relates exclusively to castings. Table A-1B relates to straight or spiral longitudinal weld joints. The quality factor is a means of derating the pressure based on the material and method of manufacture. The basis for these factors is summarized in Figure 2.13. The quality factor for furnace butt weld is the lowest, at 0.60. The quality factor does not generally affect the thickness of furnace butt weld pipe, since it is only permitted for Category D Fluid Service, and furnace butt welded pipe comes in standard wall, with a maximum diameter of DN 100 (NPS 4). ERW pipe has a quality factor of 0.85. This cannot be improved with additional radiographic examination.

Weld joint quality factors (E_j) for straight or spiral longitudinal electric fusion welded pipe and components vary from 0.8 to 1.0, depending whether it is a single- or double-sided weld and on the degree of radiographic examination (100%, spot, none). The quality factor for API 5L fusion, double butt, straight, or spiral weld pipe is 0.95, where the welds are 100% ultrasonic test (UT) examined per the specification.

No	Type of joint		Type of seam	Examination	Factor, E_j
1	Furnace butt weld, continuous weld		Straight	As required by listed specification	0.60 [Note (1)]
2	Electric resistance weld		Straight or spiral	As required by listed specification	0.85 [Note (1)]
3	Electric fusion weld				
	(a) Single butt weld (with or without filler metal)		Straight or spiral	As required by listed specification or this Code	0.80
				Additionally spot radiographed per para. 341.5.1	0.90
				Additionally 100% radiographed per para. 344.5.1 and Table 341.3.2	1.00
	(b) Double butt weld (with or without filler metal)		Straight or spiral [except as provided in 4(a) below]	As required by listed specification or this Code	0.85
				Additionally spot radiographed per para. 341.5.1	0.90
				Additionally 100% radiographed per para. 344.5.1 and Table 341.3.2	1.00
4	Per specific specification				
	(a) API 5L	Submerged arc weld (SAW) Gas metal arc weld (GMAW) Combined GMAW, SAW	Straight with one or two seams Spiral	As required by specification	0.95

Note:
(1) It is not permitted to increase the joint quality factor by additional examination for joint 1 or 2.

Figure 2.13 Longitudinal weld joint quality factor, "*E*" (ASME B31.3 Table 302.3.4).

Casting quality factors (E_c) may be increased if the procedures and inspections listed in ASME B31.3 Table 302.3.3C are utilized. The quality factors account for imperfections in castings, such as inclusions and voids. Machining all of the surfaces of a casting to a finish of 250 microinches (6.3 μm) improves the effectiveness of surface examinations such as magnetic particle, liquid penetrant, or ultrasonic examinations.

In equations where *SE* appears, the "*E*" in that product is the appropriate quality factor above. If cast components are joined by longitudinal welds, both quality factors apply, and "*E*" is the product of E_c (Table A-1A) and E_j (Table A-1B).

2.3.11 Weld joint strength reduction factors

Weld joint strength reduction factors apply at temperatures above 950 °F (510 °C) and are based on consideration of the effects of creep. They apply to longitudinal and spiral weld joints in pressure design and to circumferential weld joints in the evaluation of stresses due to standard loads, S_L.

Weld joint strength reduction factors, *W*, for weldments at elevated temperatures are included in Paragraph 302.3.5(e) in ASME B31.3. They were added because weldment creep-rupture strength had been determined to be lower than the base metal creep-rupture strength in some instances.

Since it is impractical to establish factors for specific materials, a general factor is often used. The factor varies linearly from 1.0 at 950 °F (510 °C) to 0.5 at 1500 °F (815 °C).

2.3.12 Pressure design of components (B31.3 §304)

Plant piping design is an essential part of successful plant operation. Many decisions must be made in the design phase to achieve successful plant operation. Considerations include the following:

- Required fluid quantity to or from a process
- Optimum pressure-temperature for the process
- Piping material selection
- Insulation selection
- Stress and nozzle load determination
- Pipe support scheme

The code provides minimal assistance with any of these decisions. However, the code does address material suitability with respect to temperature. Pipe material selection for a particular fluid service based on the material reactivity, corrosion, or erosion rates in the fluid service is not within the scope of the code.

B31.3 Code Appendix A Table A-1 is a list of recognized pressure-containing piping materials. By reviewing this table, the designer can determine whether or not the material selected for service is "code-recognized" (listed) and the allowable stress (S_c or S_h) of the material for the process temperature.

The code may list special considerations for use of a material. For example, ASTM A53 Grade B has been selected for service in the following conditions: $T = 850$ °F and $P = 600$ psig. Appendix A Table A-1 lists ASTM A53 Grade B, so it is a "code-listed" material. There exists a note 57 in the body of the table for this grade of A53 pipe. Table 2.10 is an example of the listing for ASTM A53 Grade B and its relevant notes in the B31.3 Table of Allowable Stresses.

Table 2.10 Basic allowable stresses from ASME B311.3

A 53	1	B	K03005	(57)(59)	B	60	35	20	20	20
A 106	1	B	K03006	(57)	B	60	35	20	20	20
A 333	1	6	K03006	(57)	−50	60	35	20	20	20
A 334	1	6	K03006	(57)	−50	60	35	20	20	20
A 369	1	FPB	K03006	(57)	−20	60	35	20	20	20
A 381	S-1	Y35	-	-	A	60	35	20	20	20
API 5L	S-1	B	-	(57)(59)(77)	B	60	35	20	20	20

Note: (57) Conversion of carbides to graphite may occur after prolonged exposure to temperatures over 800 °F (427 °C). Therefore, this material is not suitable for normal operations above 800 °F (427 °C).

Designers must be familiar with the behavior of the selected piping material when in contact with a service fluid, including its thermal expansion rate and any limitations the code places on the material, including the applicable notes preceding Table A-1.

2.3.13 Pressure design of straight pipe (B31.3 §304.1)

The code also assists the designer in determining adequate pipe wall thickness for a given material and design conditions. Equations for pressure design of straight pipe are provided in Paragraph 304.1. The minimum thickness of the pipe must be at least equal to t_m, defined as

Code Equation 2:

$$t_m = t + c \tag{2.9}$$

where

t = pressure design thickness, in. (mm)
= as determined by Equation 2.10 (Code Equation 3a)
c = the sum of the mechanical allowances plus corrosion and erosion allowances, in. (mm).
Note: For unspecified tolerances on thread or groove depth, the code specifies that an additional of 0.02 in. (0.5 mm) shall be added to the depth of the cut to take the unspecified tolerances into account.
t_m = minimum required wall thickness including allowances, in. (mm)

This determines the thickness for pressure, corrosion/erosion/mechanical strength, and threads, if required, are summed together and is the minimum thickness at which the pipe can be placed in service.

The "mill under tolerance" is the value of which found in the manufacturing specification of the particular pipe or plate from which the pipe is fabricated. For standard pipe, the mill under tolerance means that the pipe wall thickness could be 12.5% below the stated nominal thickness.

The standard "mill under tolerance" for most rolled plate from which piping can be fabricated is 0.010 in. Thus, a 0.500 in. (13 mm) wall pipe could be as low as 0.490 in. (12.5 mm). Tolerances for the most commonly used piping by specification can be found in API Recommended Practice 574. Table 2.11 lists both diameter and thickness tolerances.

The first step requires the use of one of the equations given in B31.3 §304.1.2; the equations are as follows:

For pipe with $t < D/6$, the basic equations for determining pressure design thickness are provided in the code (B31.3 §301.4.2):

Code Equation 3a:

$$t = \frac{PD}{2(SEW + PY)} \tag{2.10}$$

Table 2.11 Mill tolerances

ASTM material standard	Acceptable diameter tolerances[a]			Acceptable thickness tolerances [b]
A 53	≤NPS 1½	+1/64 in. (0.4 mm)	−1/64 in. (0.4 mm)	−12.5%
	>NPS 1½	±1%		
A106 A312 A530 A731 A790	≥NPS ⅛ ≤ NPS 1½	+1/64 in. (0.4 mm)	−1/64 in. (0.4 mm)	
	>NPS 1½ ≤ NPS 4	+1/32 in. (0.79 mm)	−1/32 in. (0.79 mm)	
	>NPS 4 ≤ NPS 8	+1/16 in. (1.59 mm)	−1/32 in. (0.79 mm)	
	>NPS 8 ≤ NPS 18	+3/32 in. (2.38 mm)	−1/32 in. (0.79 mm)	
	>NPS 18 ≤ NPS 26	+⅛ in (3.18 mm)	−1/32 in. (0.79 mm)	
	>NPS 26 ≤ NPS 34	+5/32 in (3.97 mm)	−1/32 in. (0.79 mm)	
	>NPS 34 ≤ NPS 48	+3/16 in (4.76 mm)	−1/32 in. (0.79 mm)	
A134	Circumference ±0.5% of specified diameter			Acceptable tolerance of plate standard
A135	+1% of nominal			−12.5%
A358	±0.5%			−0.01 in. (0.3 mm)
A409	Wall <0.188 in. (4 8 mm) thickness ±0.20%			−0.018 in. (0.46 mm)
	Wall <0.188 in. (4 8 mm) thickness ±0.20%			
A451	-			+⅛ in. (3 mm); −0

Continued

Table 2.11 Continued

ASTM material standard	Acceptable diameter tolerances[a]			Acceptable thickness tolerances [b]
A524	>NPS ⅛ ≤ 1½	+1/64 in. (0.4 mm)	−1/32 in. (0.8 mm)	−12.5%
	>NPS 1½ ≤ 4	+1/32 in. (0.8 mm)	−1/32 in. (0.8 mm)	
	>NPS 4 ≤ 8	+1/16 in. (1.6 mm)	−1/32 in. (0.8 m)	
	>NPS 8 ≤ 18	+3/32 in. (2.4 mm)	−1/32 in. (0.8 mm)	
	>NPS 18	+⅛ in (3.2 mm)	−1/32 in. (0.8 mm)	
A587	See ASTM A587, Table 4			
A660	-			10% greater than the specified minimum wall thickness
				Zero less than the specified minimum wall thickness
A671	+0.5% of specified diameter			0.01 in. (0.3 mm) less than the specified thickness
A672, A691	±0.5% of specified diameter			
A813	≥NPS 1¼	±0.010 in. (0.25 mm)		±12% for wall thickness
	≥NPS 1½ ≤ NPS 6	±0.020 in. (0.5 mm)		<0.188 in. (4.8 mm)
	≥NPS 8 ≤ NPS 18	±0.030 in. (0.75 mm)		
	≥NPS 20 ≤ NPS 24	±0.040 in. (1 mm)		±0 030 in. (0.8 mm) for wall
	NPS 30	±0.050 in. (1.25 mm)		Thickness ≥0.188 in. (4.8 mm)
A814	See ASTM A814, Table 1			

[a]Tolerance on DN unless otherwise specified.
[b]Tolerance on nominal wall thickness unless otherwise specified.

and

Code Equation 3b:

$$t = \frac{P(d + 2c)}{2[SEW - P(1 - Y)]} \tag{2.11}$$

where

D = pipe outside diameter (not nominal diameter) as listed in the tables of standards or specifications or as measured, in. (mm)
d = inside diameter, in. (mm)
E = quality factor from Table A-1A or A-1B
P = internal design gauge pressure, psig (kPa)
S = allowable stress value from Table A-1
W = weld joint strength reduction factor per Paragraph 302.3.5(e)
= 1.0 for seamless pipe unless longitudinal stressed on circumferential welds govern design. If so, then the circumferential weld would require evaluation to determine the value of W to be used.
= Table 2.12
Y = coefficient provided in Table 304.1.1 of the code and Table 2.13

This is valid for $t < D/6$ and for materials shown. The value of "Y" may be interpolated for intermediate temperatures.

Interpolate to find Y for intermediate temperatures. For $t \geq D/6$, $Y = \frac{d + 2c}{D + d + 2c}$.

Either of the equations may be used, as the difference in required thickness will be insignificant at lower operating temperatures (less than 900 °F (482 °C)) considering the required addition of thickness for all of the other issues such as corrosion, mechanical, and mill under tolerance.

The weld joint strength reduction factor accounts for the long-term strength of weld joints at elevated temperatures. In the absence of specific data such as creep testing, W is taken as 1.0 at temperatures of 950 °F (510 °C) and below. W falls linearly to 0.5 at 1500 °F (815 °C). The 2006 edition of B31.3 charged the designer with determining weld joint strength reduction factors for temperatures above 1500 °F (815 °C).

The coefficient "Y" is used to account for material creep, as in B31.1. The table of Y coefficients in B31.3 is virtually identical to the table given in B31.1. As previously stated, the variation of Y with temperature allows the wall thickness equation to behave in accordance with Equations 2.10 and 2.11 (Code Equations 3a and 3b) at low temperatures (with $Y = 0.4$) and in accordance with the creep-rupture equation at high temperatures (with $Y = 0.7$).

Note that Equation 2.10 (Code Equation 3a) is based on the outside diameter, rather than on the inside diameter, which is used in the ASME BPVC. The reason for this is that the outside diameter of the pipe is independent of wall thickness. For example, a 6 in. pipe will have an outside diameter of 6.625 in., regardless of the wall thickness.

Table 2.12 Weld joint strength reduction factor "*W*"

A 53	1	B	K03005	(57) (59)	B	60	35	20.0	20.0	20.0
A 106	1	B	K03006	(57)	B	60	35	20.0	20.0	20.0
A 333	1	6	K03006	(57)	−50	60	35	20.0	20.0	20.0
A 334	1	6	K03006	(57)	−50	60	35	20.0	20.0	20.0
A 369	1	FPB	K03006	(57)	−20	60	35	20.0	20.0	20.0
A 381	S-1	Y35	-	-	A	60	35	20.0	20.0	20.0
API 5 L	S-1	B	-	(57)(59)(77)	B	60	35	20.0	20.0	20.0

Table 2.13 Values of coefficient Y for $t < D/6$

Materials	Temperature, °F (°C)					
	≤900 (≤482)	950 (510)	1000 (538)	1050 (566)	1100 (593)	≥1150 (≥621)
Ferritic steels	0.4	0.5	0.7	0.7	0.7	0.7
Austenitic steels	0.4	0.4	0.4	0.4	0.5	0.7
Other ductile metals	0.4	0.4	0.4	0.4	0.4	0.4
Cast iron	0.0	-	-	-	-	-

Thus, the wall thickness can be directly calculated when the outside diameter is used in Equation 2.10 (Code Equation 3a).

Equation 2.11 (Code Equation 3b) is the same as Equation 2.10 (Code Equation 3a), but with $(d+2c+2t)$ substituted for D and rearranged to keep thickness on the left side. Note that the differences between Equations 2.10 and 2.11 (Code Equations 3a and 3b) are that Equation 2.10 begins with the OD of the pipe and Equation 2.11 begins with the ID of the pipe.

Chapter VII of B31.3 deals with nonmetallic piping and piping lined with nonmetals. Paragraph A304 describes how to calculate minimum wall thickness in these cases. The method and equations are parallel as shown in Equations 2.10 and 2.11 (Code Equations 3a and 3b). The allowable stresses are replaced with hydrostatic design stresses for nonmetals in Table B-1.

The pressure design of high pressure (greater than ANSI Class 2500 for design temperature and material group) is covered in Paragraph K304. The equations use Table K-1 for the allowable stresses. These stresses are higher than those shown in Table A-1 for the same materials.

Earlier editions of the B31.3 Code did not include the weld joint reduction factor, W, which allowed the use of the following simpler Equation 2.12 (Code Equation):

$$t = \frac{PD}{2(SEW + PY)} \tag{2.12}$$

The simpler equation will result in a more conservative computation because the denominator does not contain the PY term. With the possibility of $W < 1.0$, Equation 2.12 could lead to less conservative design thicknesses. If the metal temperatures are less than 950 °F (510 °C) or in the absence of specific creep testing data, then $W = 1.0$ and this equation could still be applied with confidence.

Pipe schedules may also be found in API RP 574. These are useful for determining the nominal dimensions of the pipe. There are two pipe schedules listed in API RP 574, one for stainless pipe and one for all other commonly used piping materials. Table 2.14 is an example of a commonly used piping schedule.

Table 2.14 **Typical pipe schedule**

A 53	1	B	K03005	(57) (59)	B	60	35	20.0	20.0	20.0
A 106	1	B	K03006	(57)	B	60	35	20.0	20.0	20.0
A 333	1	6	K03006	(57)	−50	60	35	20.0	20.0	20.0
A 334	1	6	K03006	(57)	−50	60	35	20.0	20.0	20.0
A 369	1	FPB	K03006	(57)	−20	60	35	20.0	20.0	20.0
A 381	S-1	Y35	-	-	A	60	35	20.0	20.0	20.0
API 5 L	S-1	B	-	(57)(59)(77)	B	60	35	20.0	20.0	20.0

Example 2.1 *Calculate the minimum required ordered wall thickness ("t") and schedule number for a nominal 12 in. pipe*

Given:

Pipe grade: A106 Grade B
Nominal pipe size: 12 in. ($OD = 12.75$ in.)
Design temperature: 500 °F
Design pressure: 350 psi
Corrosion allowance: 1/16 in. (0.0625 in.)
Welding method: Seamless

Determine:

The minimum required ordered wall thickness and schedule number.

Solution:

From Table 2.15 (B31.3 Code Table A-1), determine the allowable stress ("S") for A106 Grade B pipe at a design temperature of 500 °F. Read 19.0 ksi or 19,000 psi.

From Table 2.16 (B31.3 Code Table A-1B), determine the weld quality factor ("E") for A106 Grade B seamless pipe. Read 1.0.

The mill tolerance for a 12 in. pipe is 12.5% or 87.5% of the actual thickness. Refer to Table 2.17.

Weld joint strength reduction factor = 1.0 for seamless pipe.

$Y = 0.4$ from Table 2.13 (B31.3 Table 304.1.1)

Substitute the above data with Equation 2.10 (Code Equation 3a) and calculate the minimum thickness required for internal pressure:

$$t = \frac{PD}{2(SEW + PY)}$$

$$t = \frac{350 \times 12.75}{2 \times [(19{,}000 \times 1.0 \times 1.0) + (350 \times 0.4)]}$$

$$= \frac{4462.5}{38{,}280}$$

$$= 0.1165 \text{ in. (Minimum required wall thickness for internal pressure only)}$$

The actual required minimum measured thickness with corrosion/erosion allowance and mechanical strength consideration is as follows:

$$\begin{aligned} t_m &= t + c \\ &= 0.1165 + 0.0625 \\ &= 0.179 \text{ in.} \end{aligned} \tag{2.9}$$

Since "t" may not be less than t_m, thus it must be equal to at least 0.179″ and as a practical matter would require the ordering of Schedule 20 piping (see RP 574), which has a nominal thickness of 0.250. After deduction for the minus mill under-run tolerance of 12.5% given in Table 2.11 above PIPE Tolerances, it could arrive at a thickness as low as 0.21875″, which is still greater than t_m (see RP 574 for a pipe schedule listing of nominal dimensions). $t = 0.179''$ minimum ordered thickness, which when rounded up for thickness is 0.180″. Schedule 20 will be adequate.

Table 2.15 **ASME B31.3 Code Table A-1 (Allowable Stresses in Tension)**

Material	Spec. no.	P-No. or S-No. (5)	Grade	UNS no.	Notes	Min. temp., °F(6)	Specified min. strength, ksi		Min. temp. to 100	200	300
							Tensile	Yield			
Carbon steel											
Pipes and tubes (2)											
A 285 Gr. A	A 13A	1	-	-	(8b)(57)	B	45	24	15.0	14.7	14.2
A 285 Gr. A	A 672	1	A45	K01700	(57)(59)(67)	B	45	24	15.0	14.7	14.2
Butt weld	API 5 L	S-1	A25	-	(8a)	−20	45	25	15.0	15.0	14.7
SMLS & ERW	API 5 L	S-1	A25	-	(57)(59)	B	45	25	15.0	15.0	14.7
-	A 179	1		K01200	(57)(59)	−20	47	26	15.7	15.7	15.3
Type F	A 53	1	A	K02504	(8a)(77)	20	48	30	16.0	16.0	16.0
-	A 139	S-1	A	-	(8b)(77)	A	48	30	16.0	16.0	16.0
-	A 587	1	-	K11500	(57)(59)	−20	48	30	16.0	16.0	16.0
-	A 53	1	A	K02504	(57)(59)	B	48	30	16.0	16.0	16.0
-	A 106	1	A	K02501	(57)	B	48	30	16.0	16.0	16.0
-	A 135	1	A	-	(57)(59)	B	48	30	16.0	16.0	16.0
-	A 369	1	FPA	K02501	(57)	B	48	30	16.0	16.0	16.0

-	API 5 L	S-1	A	-	(57)(59)(77)	B	48	30	16.0	16.0	16.0
-	A 139	S-1	B	K03003	(8b)	A	60	35	20.0	20.0	20.0
-	A 135	1	B	K03018	(57)(59)	B	60	35	20.0	20.0	20.0
-	A 524	1	1	K02104	(57)	−20	60	35	20.0	20.0	20.0
-	A 53	1	B	K03005	(57)(59)	B	60	35	20.0	20.0	20.0
-	A 106	1	B	K03006	(57)	B	60	35	20.0	20.0	20.0
-	A 333	1	6	K03006	(57)	−50	60	35	20.0	20.0	20.0
-	A 33A	1	6	K03006	(57)	−50	60	35	20.0	20.0	20.0
-	A 369	1	FPB	K03006	(57)	−20	60	35	20.0	20.0	20.0
-	A 381	S-1	Y35	-	-	A	60	35	20.0	20.0	20.0
-	API 5 L	S-1	B	-	(57)(59)(77)	B	60	35	20.0	20.0	20.0

Basic allowable stress, *S*, ksi (1), at metal temperature, °F														
400	**500**	**600**	**650**	**700**	**750**	**800**	**850**	**900**	**950**	**1000**	**1050**	**1100**	**Grade**	**Spec. No.**
													Carbon steel Pipes and tubes (2)	
13.7	13.0	12.3	11.9	11.5	10.7	9.2	7.9	5.9	-	-	-	-	-	A 134
13.7	13.0	12.3	11.9	11.5	10.7	9.2	7.9	5.9	4.0	2.5	1.6	1.0	A45	A 672
14.2	-	-	-	-	-	-	-	-	-	-	-	-	A25	API 5 L
14.2	-	-	-	-	-	-	-	-	-	-	-	-	A25	API 5 L
14.8	14.1	13.3	12.8	12.4	10.7	9.2	7.9	5.9	4.0	2.5	1.6	1.0	-	A 179
16.0	-	-	-	-	-	-	-	-	-	-	-	-	A	A 53
-	-	-	-	-	-	-	-	-	-	-	-	-	A	A 139
16.0	16.0	15.3	14.6	12.5	10.7	9.2	7.9	-	-	-	-	-	-	A 587
16.0	16.0	15.3	14.6	12.5	10.7	9.2	7.9	5.9	4.0	2.5	1.6	1.0	A	A 53
16.0	16.0	15.3	14.6	12.5	10.7	9.2	7.9	5.9	4.0	2.5	1.6	1.0	A	A 106
16.0	16.0	15.3	14.6	12.5	10.7	9.2	7.9	5.9	4.0	2.5	1.6	1.0	A	A 135
16.0	16.0	15.3	14.6	12.5	10.7	9.2	7.9	5.9	4.0	2.5	1.6	1.0	FPA	A 369
16.0	16.0	15.3	14.6	12.5	10.7	9.2	7.9	5.9	4.0	2.5	1.6	1.0	A	API 5 L
-	-	-	-	-	-	-	-	-	-	-	-	-	B	A 139
19.9	19.0	17.9	17.3	16.7	13.9	11.4	8.7	5.9	4.0	2.5	-	-	B	A 135
19.9	19.0	17.9	17.3	16.7	13.9	11.4	8.7	5.9	4.0	2.5	-	-	1	A 524
19.9	19.0	17.9	17.3	16.7	13.9	11.4	8.7	5.9	4.0	2.5	1.6	1.0	B	A 53
19.9	19.0	17.9	17.3	16.7	13.9	11.4	8.7	5.9	4.0	2.5	1.6	1.0	B	A 106
19.9	19.0	17.9	17.3	16.7	13.9	11.4	8.7	5.9	4.0	2.5	1.6	1.0	6	A 333
19.9	19.0	17.9	17.3	16.7	13.9	11.4	8.7	5.9	4.0	2.5	1.6	1.0	6	A 334
19.9	19.0	17.9	17.3	16.7	13.9	11.4	8.7	5.9	4.0	2.5	1.6	1.0	FPB	A 369
19.9	19.0	17.9	17.3	16.7	13.9	11.4	8.7	5.9	4.0	2.5	1.6	1.0	Y35	A 381
19.9	19.0	17.9	17.3	16.7	13.9	11.4	8.7	5.9	4.0	2.5	1.6	1.0	B	API 5 L

Numbers in parentheses refer to notes for Appendix A Tables; Specifications are ASTM unless otherwise indicated.
(Courtesy of ASME B31.3)

Table 2.16 ASME B31.3 Code Table A-1B (Basic Quality Factors for Longitudinal Weld Joints in Pipe)

Spec. no.	Class (or Type)	Description	E_j (2)	Appendix A Notes
Carbon steel				
API 5 L	-	Seamless pipe	1.00	-
		Electric resistance welded pipe	0.85	-
		Electric fusion welded pipe, double butt, straight or spiral seam	0.95	-
		Furnace butt welded	0.60	-
A 53	Type S	Seamless pipe	1.00	-
	Type E	Electric resistance welded pipe	0.85	-
	Type F	Furnace butt welded pipe	0.60	-
A 105	-	Forgings and fittings	1.00	(9)
A 106	-	Seamless pipe	1.00	-
A 134	-	Electric fusion welded pipe, single butt, straight	0.80	-

These quality factors are determined in accordance with Paragraph 302.3.4(a). See also Paragraph 302.3.4(b) and Table 302.3.4 for increased quality factors applicable in special cases. Specifications, except API, are ASTM. (Courtesy of ASME B31.3)

As shown in Table 2.18 (API 574 Table 1), for NPS 12 Schedule 20 pipe, the nominal wall thickness is $0.250'' - 12.5\% = 0.21875'' > 0.180''$. Thus, Schedule 20 with a 0.21875 in. wall thickness or greater meets the specification.

Example 2.2 *Determine the minimum required ordered, "t," wall thickness and schedule number for a nominal 16 in. pipe*

Given:

Pipe grade: ASTM A671 Grade CC70 Class 22
Nominal pipe size: 16 in. ($OD = 16$ in.)
Design temperature: 750 °F
Design pressure: 500 psi
Corrosion allowance: 1/16 in. (0.0625 in.)
Welding method: electric fusion welded, 100% radiographed

Weight of process fluid will require an added thickness for mechanical strength of 0.1.00 in.

Determine:

The minimum required ordered ("*t*") wall thickness and schedule number.

Solution:
From Table 2.19 (B31.3 Code Table A-1), determine the allowable stress "*S*" for ASTM A671 Grade CC70 Class 22 at a temperature of 750 °F. Read an allowable stress of 14.8 ksi or 14,800 psi. *Note:* The plate material used to construct this grade of A671 Grade CC70 seamed pipe is A516 Grade 70. A671 is a pipe manufacturing specification; many different grades and

Table 2.17 Basic mill tolerances

ASTM material standard	Acceptable diameter tolerances[a]			Acceptable thickness tolerances[b]
A 53	≤NPS 1½	+1/64 in. (0.4 mm)	−1/64 in. (0.4 mm)	−12.5%
	>NPS 1½	±1%		
A106 A312 A530 A731 A790	≥NPS⅛ ≤ NPS 1½	+1/64 in. (0.4 mm)	−1/64 in. (0.4 mm)	
	>NPS 1½ ≤ NPS 4	+1/32 in. (0.79 mm)	−1/32 in. (0.79 mm)	
	>NPS 4 ≤ NPS 8	+1/16 in. (1.59 mm)	−1/32 in. (0.79 mm)	
	>NPS 8 ≤ NPS 18	+3/32 in. (2.38 mm)	−1/32 in. (0.79 mm)	
	>NPS 18 ≤ NPS 26	+⅛ in (3.18 mm)	−1/32 in. (0.79 mm)	
	>NPS 26 ≤ NPS 34	+5/32 in (3.97 mm)	−1/32 in. (0.79 mm)	
	>NPS 34 ≤ NPS 48	+3/16 in (4.76 mm)	−1/32 in. (0.79 mm)	
A134	Circumference ±0.5% of specified diameter			Acceptable tolerance of plate standard
A135	+1% of nominal			−12.5%
A358	±0.5%			−0.01 in. (0.3 mm)
A409	Wall <0.188 in. (4 8 mm) thickness ±0.20%			−0.018 in. (0.46 mm)
	Wall <0.188 in. (4 8 mm) thickness ±0.20%			
A451	-			+⅛ in. (3 mm); −0

A524	>NPS ⅛ ≤ 1½	+1/64 in. (0.4 mm)	−1/32 in. (0.8 mm)	−12.5%
	> NPS 1½ ≤ 4	+1/32 in. (0.8 mm)	−1/32 in. (0.8 mm)	
	> NPS 4 ≤ 8	+1/16 in. (1.6 mm)	−1/32 in. (0.8 mm)	
	> NPS 8 ≤ 18	+3/32 in. (2.4 mm)	−1/32 in. (0.8 mm)	
	> NPS 18	+⅛ in (3.2 mm)	−1/32 in. (0.8 mm)	
A587	See ASTM A587, Table 4			
A660	-			10% greater than the specified minimum wall thickness
				Zero less than the specified minimum wall thickness
A671	+0.5% of specified diameter			0.01 in. (0.3 mm) less than the specified thickness
A672, A691	±0.5% of specified diameter			±12% for wall thickness <0.188 in. (4.8 mm) ±0 030 in. (0.8 mm) for wall Thickness ≥0.188 in. (4.8 mm)
A813	≥NPS 1¼	±0.010 in. (0.25 mm)		
	≥NPS 1½ ≤ NPS 6	±0.020 in. (0.5 mm)		
	≥NPS 8 ≤ NPS 18	±0.030 in. (0.75 mm)		
	≥NPS 20 ≤ NPS 24	±0.040 in. (1 mm)		
	NPS 30	±0.050 in. (1.25 mm)		
A814	See ASTM A814, Table 1			

[a]Tolerance on DN unless otherwise specified.
[b]Tolerance on nominal wall thickness unless otherwise specified.

Table 2.18 API 574 Nominal Pipe Sizes (NPSs), Schedules, Weight Classes, and Dimensions of Steel Pipe

Pipe size (NPS)	Pipe size DN	Actual OD (in.)	Actual OD (mm)	Schedule	Weight class	Approximate ID (in.)	Approximate ID (mm)	Nominal thickness (in.)	Nominal thickness (mm)
12	300	12.750	323.8	20		12.250	311.1	0.25	6.35
				30		12.090	307.04	0.330	8.38
				-	STD	12.000	304.74	0.375	9.53
				40		11.938	303.18	0.406	10.31
				-	XS	11.750	298.4	0.500	12.70
				60		11.626	295.26	0.562	14.27
				80		11.374	288.84	0.688	17.48
				100		11.062	280.92	0.844	21.44
				120		10.750	273	1.000	25.40
				140		10.500	266.64	1.125	28.58
				160		10.126	257.16	1.312	33.32

(Courtesy of API 574)

Table 2.19 ASME B31.4 Code Table A-1 (Allowable Stresses in Tension)

400	500	600	650	700	750	800	850	900	950	1000	1050	1100	Grade	Spec. no.
21.6	20.6	19.4	18.8	18.1	14.8	12.0	9.3	6.7	4.0	2.5	…	…	CC70	A 671
21.6	20.6	19.4	18.8	18.1	14.8	12.0	9.3	6.7	4.0	2.5	1.6	1.0	CB70	A 671
21.6	20.6	19.4	18.8	18.1	14.8	12.0	9.3	6.7	4.0	2.5	1.6	1.0	B70	A 672
21.6	20.6	19.4	18.8	18.1	14.8	12.0	9.3	6.7	4.0	2.5	1.6	1.0	C70	A 672
22.8	21.7	20.4	19.8	18.3	14.8	12.0	-	-	-	-	-	-	C	A 106
22.7	22.7	22.4	21.9	18.3	-	-	-	-	-	-	-	-	CD70	A 671

Numbers in parentheses refer to notes for Appendix A Tables; Specifications are ASTM unless otherwise indicated.
(Courtesy of ASME B31.3 for A671 CC70)

Table 2.20 ASME B31.3 Code Table A-1B (Basic Quality Factors for Longitudinal Weld Joints in Pipes, Tubes, and Fittings, "*E*," for A672 Grade CC70 Class 22 pipe)

Spec. no.	Class (or Type)	Description	E_j (2)	Appendix A Notes
Carbon steel				
A 671	12, 22, 32, 42, 52	Electric fusion welded pipe, 100% radiographed	1.00	…

These quality factors are determined in accordance with Paragraph 302.3.4(a). See also Paragraph 302.3.4(b) and Table 302.3.4 for increased quality factors applicable in special cases. Specifications, except API, are ASTM. (Courtesy of ASME B31.3)

Table 2.21 ASME B31.3 Code Table 3 (Permissible Tolerances in Diameter and Thickness for A671 Ferritic Pipe)

ASTM material standard	Acceptable diameter tolerances	Acceptable thickness tolerances
A671	+0.5% of specified diameter	0.01 in. (0.3 mm) less than the specified thickness
A672, A691	±0.5% of specified diameter	

classes can be made to this specification. Class designates the type of heat treatment performed during manufacturing of the pipe, whether the weld has been radiographed and to what extent and whether the pipe has been pressure-tested as listed in the 671 Specification.

From Table 2.20 (B31.3 Code Table A-1B), determine the weld basic quality factor ("*E*") for A671 Grade CC70 Class 22 pipe. Read 1.0.

From Table 2.21 (API RP 574 Table 3), determine the permissible tolerances in diameter and thickness for A671 pipe. Read +0.5% of specified diameter and 0.01 in. (0.3 mm) less than the specified thickness. *Note:* The undertolerance is also stated in the pipe specifications, but the quick reference table of API RP 574 lists the most commonly used piping for plant applications.

Weld joint strength reduction factor, "*W*" = 1.0 for welded pipe.

$Y = 0.4$ from Table 2.13 (B31.3 Table 304.1.1).

Substitute the above data with Equation 2.10 (Code Equation 3a) and calculate the minimum thickness required for internal pressure:

$$t = \frac{PD}{2 \times [(SEW) + (PY)]}$$

$$t = \frac{500 \times 16}{2 \times [(14{,}800 \times 1.0 \times 1.0) + (500 \times 0.4)]} \tag{2.10}$$

$$= \frac{8000}{30{,}000}$$

$$= 0.2666\,\text{in. (Minimum required wall thickness for internal pressure only)}$$

The actual required minimum thickness with corrosion/erosion allowance and mechanical strength requirements is as follows:

$$\begin{aligned} t_m &= t + c \\ &= 0.2666'' + 0.0625'' + 0.100 \\ &= 0.4291'' \end{aligned} \tag{2.9}$$

Since "t" may not be less than "t_m," thus it must be equal to 0.4291 and would be rounded up to 0.430 in. measured or minimum per purchase specification. *Note:* The normal rules of rounding values do not apply in ASME Code calculations. Always round up for thickness. Rounding this solution to 0.429 would not be proper for a code calculation.

From a practical matter, as shown in Table 2.22 (API RP 574 Table 1), a 16 in. Schedule 40 pipe has a nominal wall thickness of 0.500. Since this specification of pipe is made from plate, the undertolerance is 0.010 in. (refer to step 3). Subtracting the mill under-run tolerance from the nominal thickness, we have $0.5.00 - 0.100 = 0.490$ in. Therefore, use Schedule 40 since $0.490 > 0.430$ in.

2.3.14 Pipe wall thickness for external pressure

Calculating the required wall thickness of pipe subjected to external pressure is addressed in B31.3 by referencing the procedures for calculating the external pressure allowed on vessel shells found in ASME BPVC, Section VIII, Division 1, Paragraph UG-28, which is as follows:

Note: The term "pipe" is used in place of shell in the following procedure:

(a) The rules for the design of shells and tubes under external pressure given in this division are limited to cylindrical shells (in our case pipe), with or without stiffening rings.

(b) The symbols defined below are used in the procedures of this paragraph:

A = factor determined from Figure G in Subpart 3 of Section II, Part D and used to enter the applicable material chart in Subpart 3 of Section II, Part D

B = factor determined from the applicable material chart in Subpart 3 of Section II, Part D for maximum design metal temperature, psi

D_o = outside diameter of cylindrical pipe, inches

E = modulus of elasticity

L = total length, in. (mm), of a design length of a piping section between lines of support (see Figure UG-28.1). A line of support is

(1) a circumferential line on a pipe cap,

(2) a stiffening ring,

(3) a pipe reducer.

P = external design pressure, psi

P_a = calculated value of maximum allowable external working pressure for the assumed value of t, psi

t = minimum required thickness of cylindrical shell or pipe

Beginning with ASME BPVC §UG-28(c), there are step-by-step instructions for working these problems. We will go through these steps one at a time.

Pipes having D_o/t values ≥ 10:

Step 1: Assume a value for t and determine the ratios L/D_o and D_o/t. As an example, let's consider a 10 in. *OD* pipe with a wall thickness of 0.530 in. and a length of 120 in. operating

Table 2.22 API RP 574 Table 1 (Nominal Pipe Sizes (NPSs), Schedules, Weight Classes, and Dimensions of Steel Pipe)

Pipe size (NPS)	Pipe size ON	Actual OD in.	Actual OD mm	Schedule	Weight class	Approximate ID in.	Approximate ID mm	Nominal thickness in.	Nominal thickness mm
14	350	14.000	355.6	10		13.500	342.9	0.250	6.35
				20		13.376	339.76	0.312	7.92
				30	STD	13.250	336.54	0.375	9.53
				40		13.124	333.34	0.438	11.13
				-	XS	13.000	330.2	0.500	12.70
				60		12.812	325.42	0.594	15.09
				80		12.500	317.5	0.750	19.05
				100		12.124	307.94	0.938	23.83
				120		11.812	300.02	1.094	27.79
				140		11.500	292.088	1.125	31.756
				160		11.188	284.18	1.406	35.71
16	400	16.000	406.4	10		15.500	393.7	0.250	6.35
				20		15.376	390.56	0.312	7.92
				30	STD	15.250	387.34	0.375	9.53
				40	XS	15.000	381	0.500	12.70
				60		14.688	373.08	0.656	16.66
				80		14.312	363.52	0.844	21.44
				100		13.938	354.02	1.0311	26.19
				120		13.562	344.48	1.219	30.96
				140		13.124	333.34	1.438	36.53
				160		12.812	325.42	1.594	40.49

(Courtesy of API RP 574)

at a temperature of 500 °F. Then, $D_o/t = 10/0.530 = 18.8$, say, 19 (no need to be exact), and $L/D_o = 120/10 = 12$.

Step 2: Enter Figure 2.14 (ASME BPVC Section II, Part D, Subpart 3, Figure G) in Subpart 3 of Section II, Part D at the value of $L/D_o = 12$. For values of L/D_o greater than 50, enter the chart at a value of $L/D_o = 50$. For values of L/D_o less than 0.05, enter the chart at a value of $L/D_o = 0.05$. In our example from step 1, read a value of $L/D_o = 12$.

Step 3: As shown in Figure 2.15, move horizontally to the line for the value $D_o/t = 19$ determined in Step 1. Round to 20 since these calculations are not meant to be extremely precise.

Step 4: As shown if Figure 2.16, at the intersection of $L/D_o = 12$ and $D_o/t = 20$, draw a vertical line downward and read factor $A = 0.0028$.

Step 5: Enter the applicable material chart in Figure 2.17 (Section II, Part D, Subpart 3) for the specific material under consideration. In our example, enter the bottom of Figure 2.17 with factor $A = 0.0028$ and intersect the temperature line at 500 °F. Draw a horizontal line to the left and read factor $B = 12{,}000$.

Step 6: Substitute values into the allowable external pressure formula from ASME BPVC, Section VIII, Division 1, §UG-28:

$$P_a = \frac{4B}{3(D_o/t)} = \frac{4 \times 12{,}000}{3 \times 19} = 842 \text{ psi}$$

2.3.15 Wall thickness of permanent blanks (B31.3 §304.5)

A blind flange may be designated in accordance with Equation 2.9. The minimum thickness, considering the manufacturers minus tolerance, shall not be less than t_m:

$$t_m = t + c \tag{2.9}$$

where t_m is the minimum required thickness, including mechanical, corrosion, and erosion allowances.

Blind flanges used with piping are calculated using the formulas of ASME BPVC, Section VIII, Division 1. They are essentially the same as bolted and flat head flanges. Refer to the formulas of UG-34 for these calculations when needed.

The calculation for "t_m" is based on the design pressure and is combined with corrosion, erosion, and mechanical wear in the following permanent blank formula. These considerations are combined adding the "+c" in the basic design thickness equation. The manufacturers minus tolerance must also be considered.

The minimum required thickness of permanent blanks shall be calculated in accordance with this equation:

$$t_m = d_g \sqrt{\frac{3P}{16SEW}} + c \tag{2.11}$$

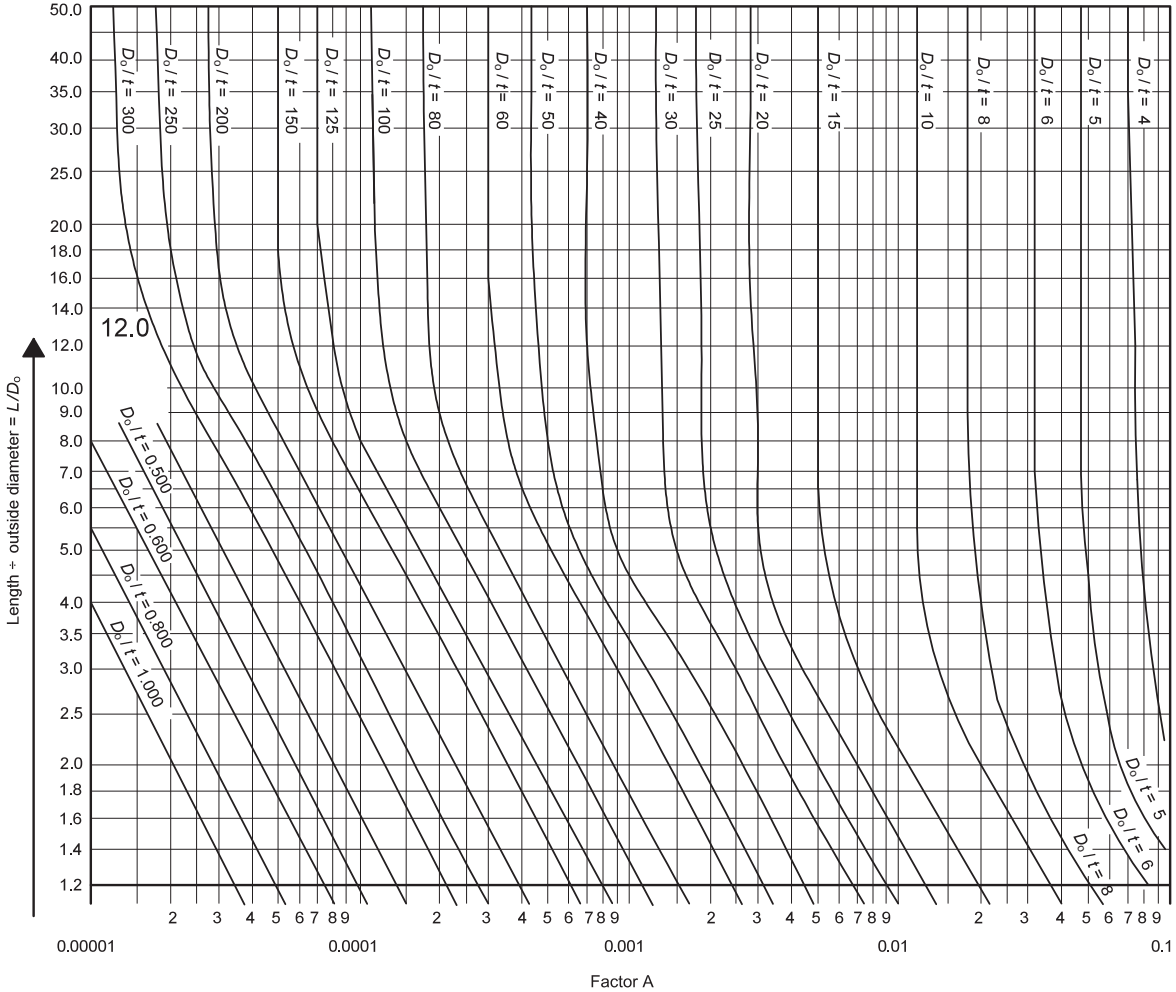

Figure 2.14 Figure G (1 of 3), ASME BVPC Section II, Part D, Subpart 3, determination of A.

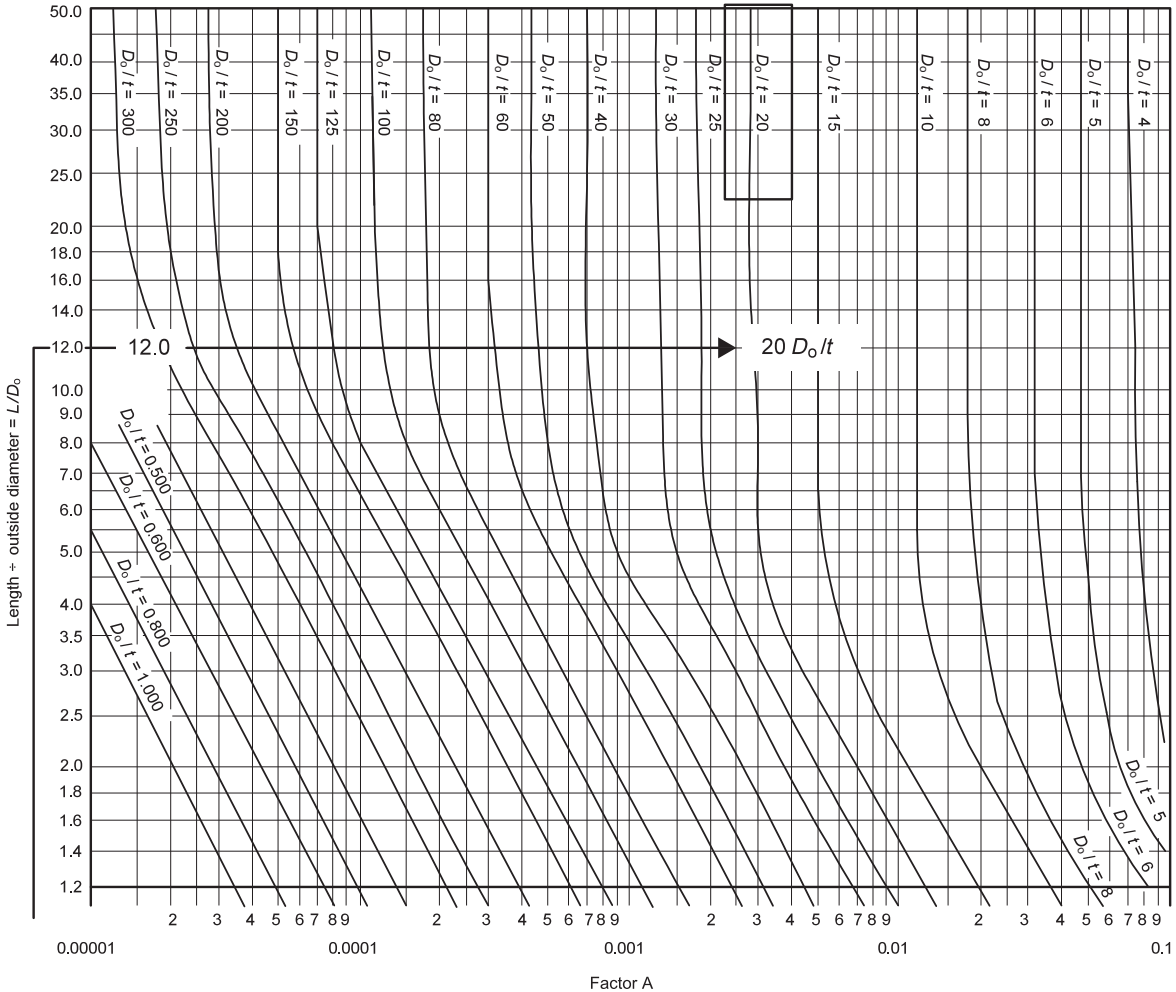

Figure 2.15 Figure G (2 of 3), ASME BPVC Section II, Part D, Subpart 3, determination of A.

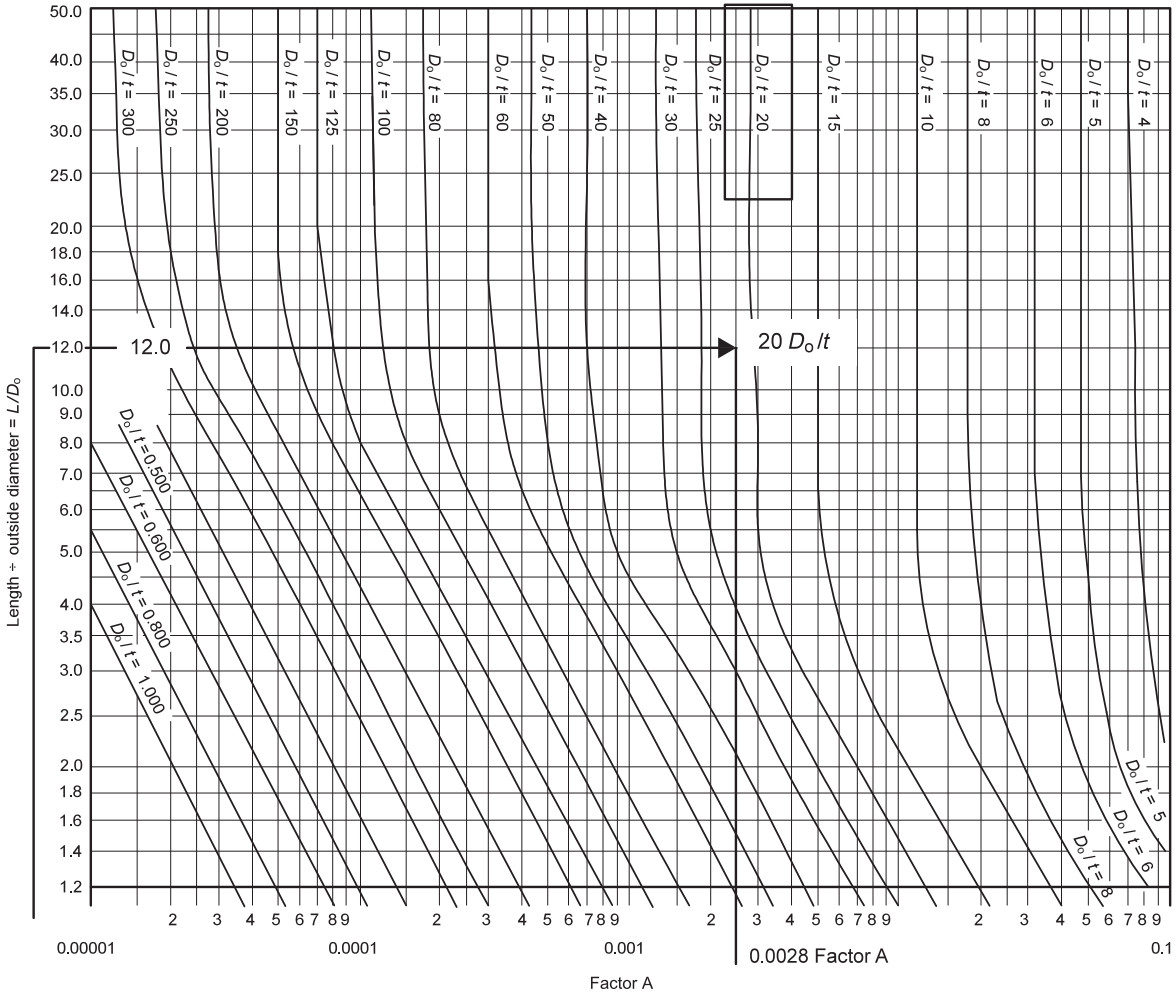

Figure 2.16 Figure G (3 of 3), ASME BPVC Section II, Part D, Subpart 3, determination of A.

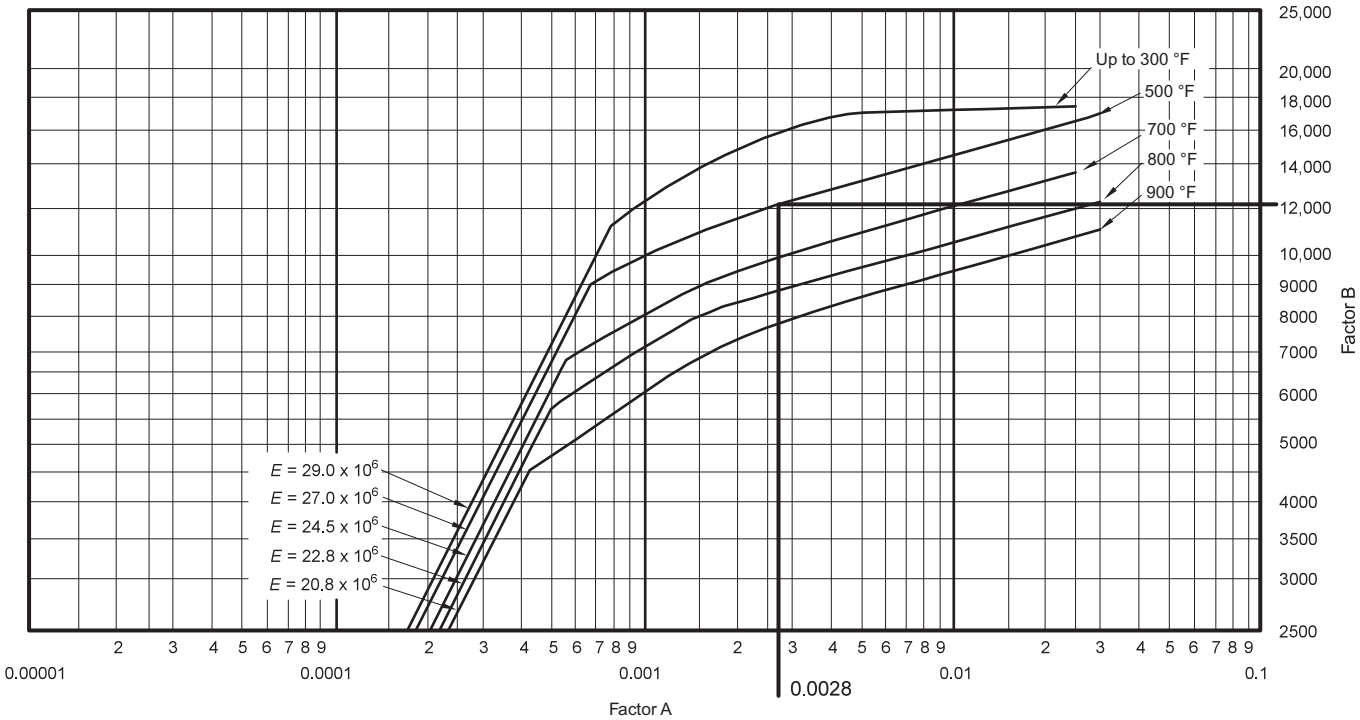

Figure 2.17 Factor A versus temperature chart, ASME BPVC Section II, Part D, Subpart 3, determination of B.

where

d_g = inside diameter of gasket for raised or flat face flanges or the gasket pitch diameter for ring joint and fully retained gasketed flanges
E = the same as defined in Paragraph 304.1.1
P = design gauge pressure
S = the same as defined in Paragraph 304.1.1
c = sum of allowances defined in Paragraph 304.1.1
W = 1.0 unless weld metal strength is lower than pipe strength

Example 2.3 *Determination of the required minimum wall thickness for a permanent blank to be installed in a piping system*

Given:

Pipe grade: ASTM A285 Grade B
Nominal pipe size: 12 in. (OD = 12.75 in./ID = 12 in.)
d_g: 12.50 in. (ID + 0.500 in.)
Design pressure: 500 psi
Design temperature: 400 °F
Corrosion allowance: 1/16 in. (0.0625 in.) applies to both sides of the blank
W = 1.0
Mill under-run allowance: −0.010 in. for rolled plate

Determine:

The pressure design thickness and ordered or as measured thickness "T."

Solution:
Calculate the pressure design thickness using the formula given in B31.3 §304.5.3:

$$\begin{aligned} t_m &= d_g\sqrt{\frac{3P}{16SEW}+c} \\ &= 12.50\sqrt{\frac{3\times 500}{16\times 15{,}400\times 1.0\times 1.0}+c} \\ &= 12.50\sqrt{\frac{1500}{246{,}400}+c} \\ &= 12.50\times\sqrt{0.0060876+c} \\ &= (12.50\times 0.078023)+c = 0.9752875+c \end{aligned}$$

Allowing for corrosion on both sides of the blank of the plate material, we have the following required T. Remember to allow for the under-run of 0.010 typical for plate:

$$\begin{aligned} T &= 0.9752875'' + (2\times 0.0625'') \\ &= 1.1002875'' \end{aligned}$$

The obvious variations of this type of problem are the cases where there is no corrosion or there is corrosion on only one side.

2.3.16 Design of component parts

The preceding discussion is reviewed the B31.3 design guidance for pressure piping. The required wall thickness calculation is illustrated in Example 2.3 in that the code specified only a minimum wall and provided a means of determining that minimum wall thickness. For the most part, this same type of guidance is provided for other pressure-containing components as well. However, this does not mean that the designer has to perform a pressure design analysis of every component in a system. For most standard components, the code has conducted a "prequalification" test that relieves the designer of the task of determining the component's pressure design adequacy. In doing so, the code has established three types of classifications for piping components, as follows:

(1) Listed rated components (§302.2.1) are those for which the pressure-temperature rating has been established and, when used within these specified bounds, are considered safe with no additional need to determine the pressure design adequacy.
(2) Listed unrated components (§302.2.2) include components such as in-line fittings as elbows, reducers, and tees whose pressure rating is based on the pressure strength of matching seamless pipe. The component must be made of a material having at least the same allowable stress as the pipe and must have a pressure retention strength of at least 87.5% of the wall thickness of the matching pipe.
(3) Unlisted components (302.2.3) may be used in a piping system provided the designer is satisfied with the chemical and physical properties of the material used in the component and with the quality control and method of manufacture. The pressure design of an unlisted component must then be proven (by calculations) to be in accordance with the pressure design in §304 or by §304.7.2 of B31.3.

2.3.16.1 Elbows and bends

The code pressure design requirements for elbows and bends that are not manufactured in accordance with the listed standards are as follows:

(1) Bends can be made by either a hot or cold process, provided the material is suitable for the bending process (§332.1).
(2) The finished surface shall be free of cracks and substantially free from buckling.
(3) The wall thickness after bending shall not be less than the minimum wall, considering corrosion/erosion and mill under-run tolerance.
(4) In bend flattening, the difference between maximum and minimum diameters at any cross section shall not exceed 8% of nominal outside diameter for internal pressure and 3% for external pressure (§332.2.1).

The major concern with respect to an elbow in external pressure service is the potential for a structural collapse of the elbow. Elbows in external pressure service more than 3% out of round may be well on the way to structural collapse. Elbows out of round as much as 8% in internal pressure service are permitted because the pressure will straighten the out of roundness to values less than 8%. Figure 2.18 shows the degree to which an elbow wall might be reduced on the extrados by the manufacturing process. Figure 2.19 shows the nomenclature for bends in pipe.

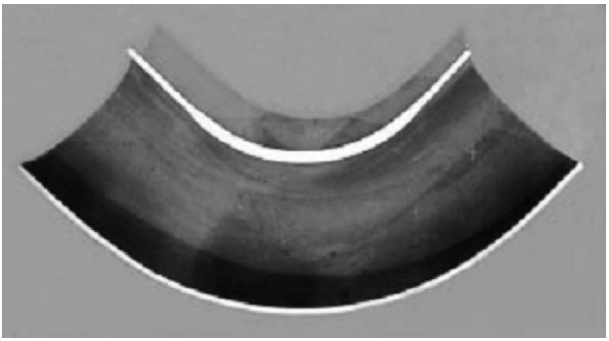

Figure 2.18 Cutaway of an elbow illustrating the wall thickness thinning on extrados and thickening on intrados.

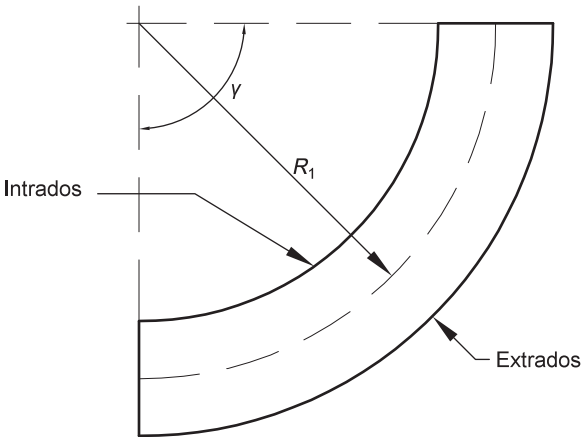

Figure 2.19 Pipe bend nomenclature.

2.3.16.2 Miter bends

Multiple miters, whose miter cut angle is less than 22.5°, are limited to a pressure that will generate hoop stresses not to exceed 50% of the yield strength of the material at temperature. This is done by restricting the maximum pressure to a lesser value as calculated by the following equation (Code Equations (4a) and (4b)):

Code Equation 4a

$$P_m = \frac{SEW(T-c)}{r_2}\left(\frac{T-c}{(T-c)+0.643\tan\theta\sqrt{r_2(T-c)}}\right) \tag{2.12}$$

Code Equation 4b

$$P_m = \frac{SEW(T-c)}{r_2}\left(\frac{R_1-r_2}{R_1-0.5r_2}\right) \tag{2.13}$$

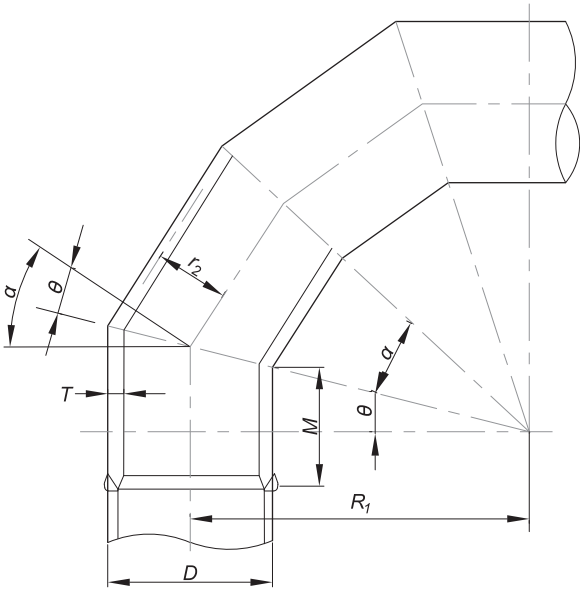

Figure 2.20 Miter bend nomenclature.

The nomenclature for the variables required in calculations is shown in Figure 2.20.

Single miters or miters whose bend angle is greater than 22.5° are limited to hoop stresses of 20% of the material yield at temperature by the equation (Code Equation (4c)).

Designers who wish to use miters in a system but do not wish to pay this pressure penalty can simply increase the wall thickness of the miter, thus reducing the hoop stress to values less than the code limit. Although this technique seems straightforward, it is not always clear where the miter starts:

$$P_{\mathrm{m}} = \frac{SEW(T-c)}{r_2}\left(\frac{T-c}{(T-c)+1.25\tan\theta\sqrt{r_2(T-c)}}\right) \tag{2.14}$$

2.3.16.3 Branch connections

Piping system branch connections may be made by any one of several methods. These methods include tees, pad reinforced (see Figure 2.21) or unreinforced intersections, crosses, integrally reinforced weld-on or weld-in contoured insert fittings, or extrusions (Paragraph 304.3.1). The code philosophy for pressure design of intersections is concerned with the available pressure reinforcement offered by the geometry of the intersection. The process of making an intersection weakens the run pipe by the opening that must be made in it.

Figure 2.21 Typical branch connection.

Unless the wall thickness of the run pipe is sufficiently in excess of that required to sustain pressure at an intersection not manufactured in accordance with a listed standard, it may be necessary to provide added material as reinforcement. This reinforcement material is added local to the intersection that is integral to the run and branch pipes.

The amount of required pressure reinforcement is determined by performing area replacement calculations (Paragraph 304.3.3) using the design conditions established for the intersection. Area replacement calculations are not required for intersections using listed-rated or listed-unrated tee intersections provided the intersection is used within the pressure-temperature bounds stated in the listing standard.

Area replacement calculations are not required for unlisted tee intersections, provided the tee component meets at least one of the requirements of §304.7.2, which are as follows:

- Duplicating a successful operating system
- Experimental stress analysis
- Proof test
- Detailed stress analysis (finite element)

Also, pressure reinforcement is not required for intersections using couplings whose size does not exceed NPS 2 or one-fourth of the nominal diameter of the run.

The B31.3 Code procedures for replacement calculations are valid for the following conditions:

- The centerline of the branch pipe must intersect the centerline of the run.
- The angle of the intersection, p (see Figure 2.22), must be between 45° and 90°.
- The run pipe diameter-to-thickness ratio, (D_h/T_h), is less than 100.
- The branch-to-run diameter ratio (D_b/D_h) is not greater than 1.0.
- For $D_h/T_h > 100$, the branch diameter can be no larger than one-half the run diameter.

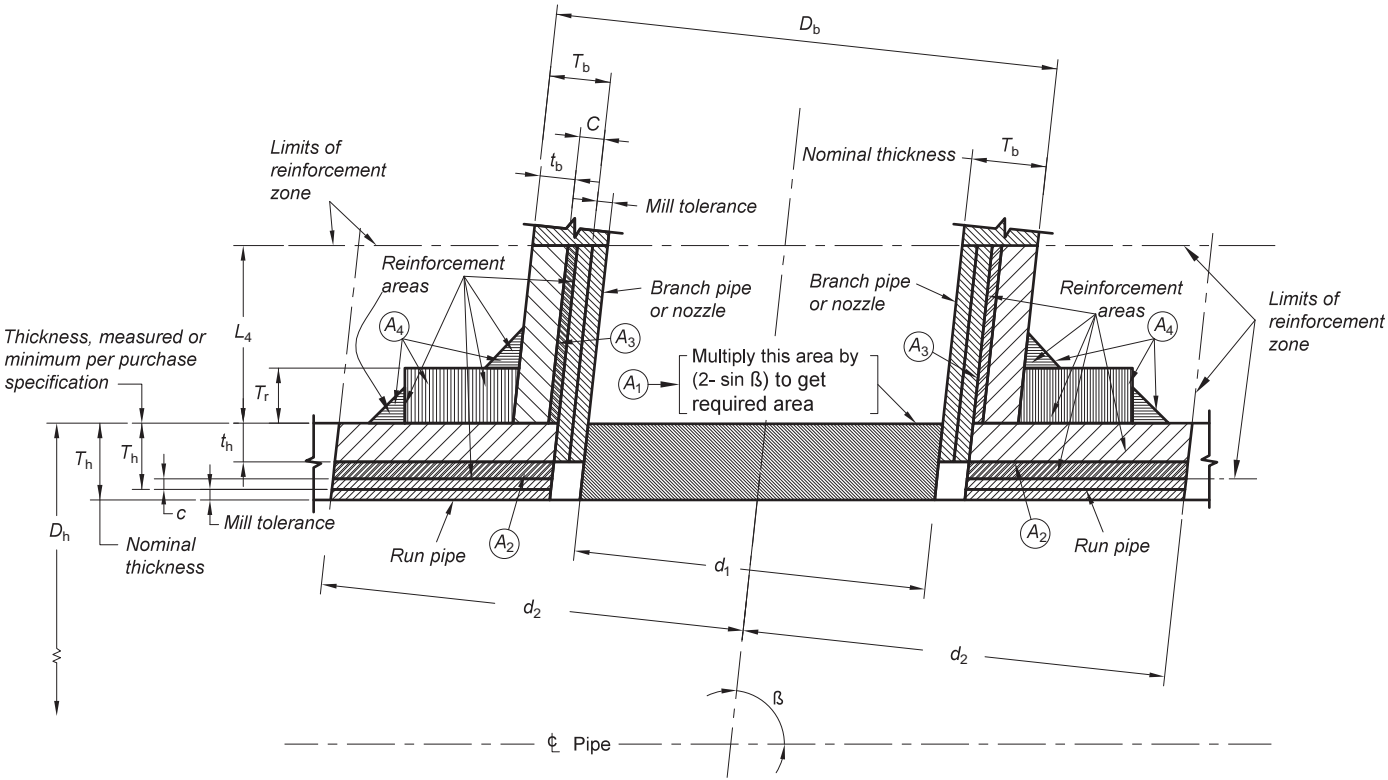

General note: This figure illustrates the nomenclature of Paragraph 304.3.3 it does not indicate complete details or preferred method of construction.

Figure 2.22 ASME B31.3 Figure 304.4.4 branch connection nomenclature (*Note:* This figure illustrates the nomenclature of Paragraph 304.3.3. It does not indicate complete welding details or a preferred method of construction. For typical weld details, see Figure 328.5.4D.) (Courtesy of ASME).

2.3.17 Fittings

Block pattern pipe fittings (see Figure 2.23) that are normally found in high-pressure systems can be designed by a pressure area procedure that employs a totally different methodology from that used by B31.3 for unreinforced fabricated tees, pads, or extrusions previously discussed in "Branch Connections" section.

Block pattern pipe fittings (see Figure 2.23) that are normally found in high-pressure systems can be designed by a pressure area procedure that employs a totally different methodology from that used by B31.3 for unreinforced fabricated tees, pads, or extrusions previously discussed in "Branch Connections" section.

In the pressure area procedure, the component is graphically designed (drawn) and the pressure area calculations are performed. B31.3 offers no guidance on the design of wye fittings by area replacement procedures. The tee and lateral can be designed using B31.3 procedures for pressure design of intersections because these procedures are valid for branch to run angles ranging from 90° to 45°. Manufacturers have their own design criteria for block wyes.

2.3.18 Closures

The B31.3 Code approach for designing closures (§304.4) is the same as for determining the wall thickness for pipe. The wall thickness selected for closures, considering pressure, corrosion/erosion, and mill under-run tolerances, would be the next available plate or forging thickness. The pressure design wall thickness, "*t*," for closures from ASME BPVC, Section VIII, Division 1 is presented in Table 2.23.

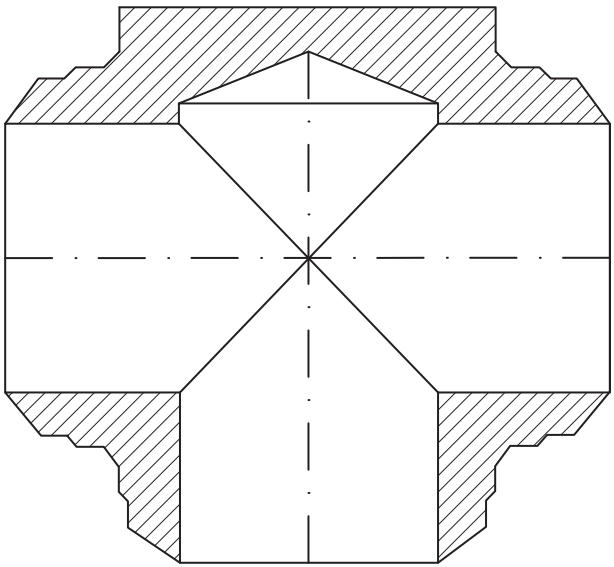

Figure 2.23 Example of a block pattern tee.

Table 2.23 Summary of ASME BPVC, Section VIII, Division 1, head calculations

Type of closure	Concave to pressure	Convex to pressure
Ellipsoidal 2:1 head	$\frac{PD}{(2SE-0.2P)}$	The larger of (1) concave "t," with $P=1.67P_o$, or (2) "t" from UG-33(d)[a]
Torispherical head for 6% knuckle radius	$\frac{0.885PL}{(SE-0.1P)}$	The larger of (1) concave "t," with $P=1.67P_o$, or (2) "t" from UG-33(e)[a]
Hemispherical head for $t<0.365L$ and $P<0.665SE$	$\frac{PL}{(2SE-0.2P)}$	See UG-33(c)[a]
Conical head (without transition knuckle)	$\frac{PD}{(2\cos(\alpha)(SE-0.6P))}$	See UG-33(f)[a]

[a]ASME BPVC, Section VIII, Division 1.

B31.3 Code does not provide equations for closures; the designer is referred to ASME BPVC, Section VIII. Terms not defined earlier are defined in the table. Other conditions may be applicable in the use of these equations. One should always refer to the ASME BPVC before use.

2.3.19 Flanges

Generally, flanges used in refinery service are manufactured in accordance with the listed standard, ASME B16.5. Flanges made to this standard and used within the pressure-temperature limits specified therein are suitable for service without any further pressure design analysis. The pressure-temperature limits are established for each flange pressure class and material. Examples of a few of the limits are shown in Table 2.24.

Table 2.24 Examples of specific material pressure-temperature ratings for AMSE B16.5 flanges

Pressure class	Material	Maximum temperature (°F)	Maximum pressure (psig)
150	A105	100	285
300	A105	100	740
600	A105	100	1480
150	F316	100	275
300	F316	100	720
600	F316	100	1440

The equation for determining the pressure-temperature rating, taken from ASME B16.5, is

$$P(t) = \frac{P(r)S(1)}{8750} \tag{2.15}$$

where

$P(t)$ = rated working pressure, psig, for the specified material at temperature
$P(r)$ = pressure rating class index expressed in psi. With the exception of class 150, $P(r)$ is equal to the pressure class of the flange, that is, $P(r) = 300$ for class 300 flanges. For class 150 flanges, $P(r) = 115$.

Expansion joints are used in piping for any of the following reasons:

- To reduce *expansion stresses*
- To reduce *piping reactions* on connecting equipment
- To *reduce pressure drop* in a system where insufficient flexibility exists
- To *isolate* mechanical vibration

Other factors that could influence the decision to use expansion joints could be inadequate space or economics (favoring an expansion joint over a conventional expansion loop or offset piping arrangement). The two styles of expansion joints most frequently found in chemical plant and refinery service are *bellows* and *slip-joint* styles (§304.7.4) that when used alone or in combination service (e.g., universal, hinged, or gimbal bellows joint) can adequately absorb thermal expansion or contraction displacements.

Table 2.25 serves as a guide for expansion joint selection for a given set of thermal displacements. Tables 2.26 and 2.27 provide more information on bellows-type expansion joints.

The support design of piping containing expansion joints requires special consideration for the anchors and guides used to control the thermal displacements and pressure forces.

The main anchors used with unrestrained expansion joints are of particular importance and are summarized into three load functions:

(a) Sliding friction force of the pipe, F_f
(b) Spring force of the expansion joint, S_f
(c) Pressure thrust force of the expansion joint, P_f

Table 2.25 Expansion joint selection guide

Displacement	Bellows	Slip joint
Axial	Yes	Yes
Lateral	Yes	No
Angular rotation	Yes	No
Torsion	Yes	Yes

Table 2.26 Modeling metallic bellows-type expansion joints in a computerized pipe flexibility analysis

Unrestrained no hardware	
Limit rod	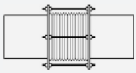
Single-slotted hinge	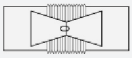
Universal slotted hinge	
Single-tied two rods	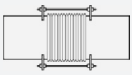
Single-tied three or more rods	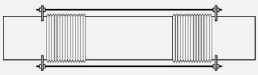
Single-tied three or more rods	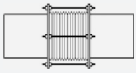
Universal tied three or more rods	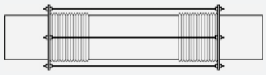
Single hinge	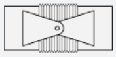
Single gimbal	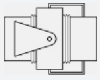
Pressure balance tee/elbow	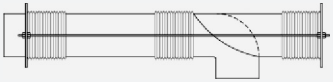

2.3.20 Joints

The sliding friction force, F_f, is equal to the weight of the sliding pipe times the friction factor coefficient. The spring force, S_f, is equal to the spring rate of the expansion joint times the displacement of the joint. These two forces are easily calculated. The pressure force, P_f, is often misunderstood and misused; therefore, a greater explanation of how to determine this force will be presented.

To understand this pressure force, consider a length of pipe with capped ends subjected to internal pressure (Figure 2.24a). The pressure force, P_f, on each capped end is

$$P_f = \frac{\pi P D^2}{4}$$

where

D = inside pipe diameter and
P = design pressure

Table 2.27 Bellows-type expansion joints

Expansion joint style	P_t at anchor	Deflections						Stiffness coefficient						Cost fact.	Shell temp.
		D_a	D_s	D_1	O_a	O_s	O_1	S_a	S_s	S_1	SO_a	SO_s	SO_1		
Single	Y	Y	Y	Y	Y	Y	Y	Y	Y	Y	Y	Y	Y	1	Hot
Two limit rod	Y	L	Y	L	Y	L	Y	L	Y	L	Y	L	Y	2	Hot
Single-tied two rods	N	N	Y	Y	Y	N	Y	N	Y	Y	Y	N	Y	2-5	Cold
Single-slotted hinge	Y	L	N	N	N	L	Y	L	N	N	N	L	Y	4	Hot
Single-tied three or more rods	N	N	Y	Y	Y	N	N	N	Y	Y	Y	N	N	3-7	Cold
Single hinge	N	N	N	N	N	N	Y	N	N	N	N	N	Y	6	Cold
Single gimbal	N	N	N	N	N	Y	Y	N	N	N	N	Y	Y	8	Cold
Universal tied two rods	N	N	Y	Y	Y	N	Y	N	Y	Y	Y	N	Y	2-5	Cold

Universal slotted hinge	Y	L	Y	L	N	L	Y	L	Y	L	N	L	Y	6	Hot
Universal tied three or more rods	N	N	Y	Y	Y	N	N	N	Y	Y	Y	N	N	3-7	Cold
Universal hinge	N	N	Y	N	N	N	Y	N	Y	N	N	N	Y	12	Cold
Universal gimbal	N	N	Y	Y	N	Y	Y	N	Y	Y	N	Y	Y	16	Cold
Pressure balance tee or elbow	N	Y	Y	Y	Y	Y	Y	Y	Y	Y	Y	Y	Y	15-20	Cold
Hinge and two-gimbal	N	Y	Y	Y	N	Y	Y	See above for a discussion of individual units						15-20	Cold

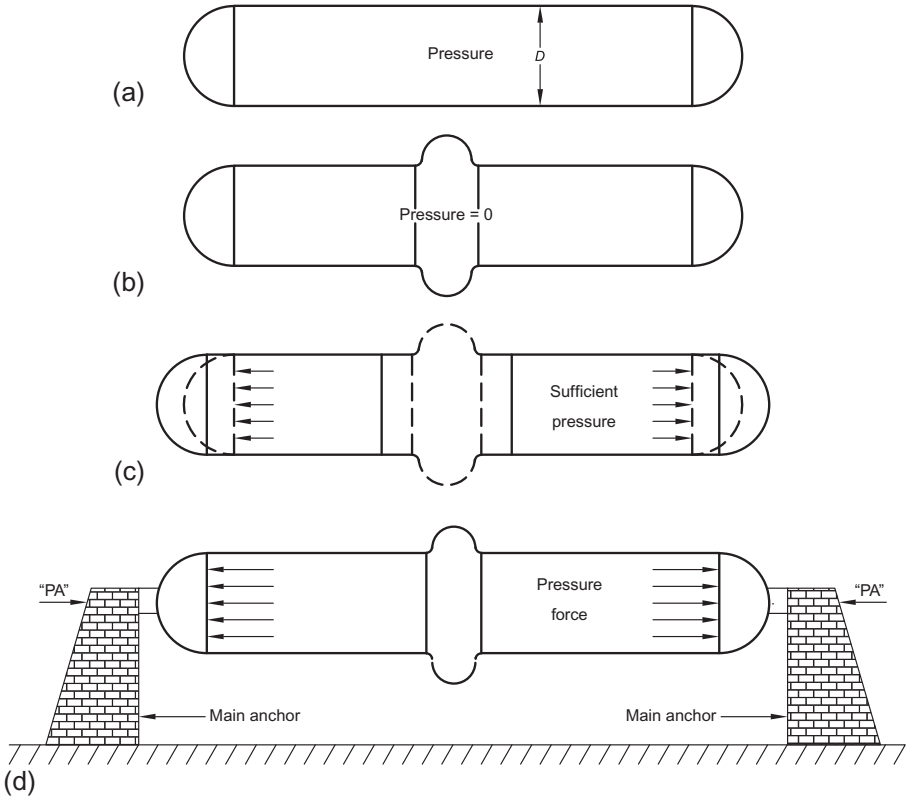

Figure 2.24 Pressure force P_f of expansion joint.

The longitudinal pressure force is carried in tension in the pipe wall and the pipe is structurally stable.

Now consider the same pipe with a band cut out of the center and then sealed with a flexible element, such as a bellows, which will not offer any resistance to the longitudinal pressure force (Figure 2.24b). As pressure is added to this bellowed pipe, the bellows, which would then be subjected to the longitudinal tensile force, will straighten out to a straight tube (Figure 2.24c). The bellows would no longer be capable of accommodating axial motion and may rupture because the wall thickness of the bellows is normally less than one-quarter that of the pipe. Hence, it is apparent that in order to maintain the bellows configuration, external main anchors must be added to carry the pressure force (Figure 2.24d). Such a system is called a *compression system*, since an external compressive force must be added to the piping system to prevent the bellows from elongating.

The pressure force is determined by first calculating the force offered by the bellows inside the diameter fluid area and adding this force to the bellows side wall thrust area (as detailed below).

The bellows inside diameter fluid area is

$$\text{Bellows } ID \text{ area} = \frac{\pi(ID)^2}{4}$$

The side wall thrust area can be visualized as internal pressure acts on the side wall of the bellows. The convolution would tend to spread out in the *longitudinal direction*. This force *must be restrained* by the main anchor as well.

As an approximation, consider a 1 in. wide radial strip cut out of a corrugation and construct a free-body diagram of this strip when acted on by pressure. Hence, one-half of the convolution side wall load is carried in tension at the crest of the convolution, and the other half is carried in compression at the inside diameter of the bellows.

2.3.21 Branch connections

The design of branch connections is similar to B31.1 and is based on a simple approach. However, the resulting design calculations are the most complex of the design-by-equation approaches for pressure design provided in the code. A branch connection cuts a hole in the run of the pipe. The metal removed is no longer available to withstand the forces due to internal pressure. An area replacement concept is used for those branch connections that do not comply either with listed standards or with certain designs. The area of the metal removed by cutting the hole, to the extent that it was required for internal pressure, must be replaced by extra metal in a region around the branch connection.

The simplified design approach is limited with respect to the geometries to which it is considered applicable. These limitations are as follows:

- The run diameter-to-thickness ratio is less than 100.
- The branch-to-run diameter ratio is not greater than one.
- The angle β (angle between the branch and the run pipe axis) is at least 45°. This is analogous to B31.1's angle α.
- The axis of the branch intersects the axis of the run pipe. This was also a requirement of B31.1.

If the above limitations are not satisfied, the designer is referred to Paragraph 304.7.2. Alternatives in that paragraph include proof testing and finite-element analysis. Paragraph 304.3.5(e) suggests the consideration of integral reinforcement or complete reinforcement for such branch connections.

The area A_1 of metal removed is defined as

$$A_1 = t_h d_1 (2 - \sin\beta) \tag{2.16}$$

where

d_1 = effective length removed from the run at the branch connection. For branch intersections where the branch opening is a projection of the branch pipe inside diameter (e.g., pipe-to-pipe fabricated branch), $d_1 = [D_b - 2(T_b - c)]/\sin\beta$.

t_h = pressure design thickness of the header
β = the smaller angle between axes of branch and run

For a 90° branch connection, d_1 is effectively the largest possible inside diameter of the branch pipe, if the inside diameter of the pipe is fully corroded and with the full mill tolerance removed from the inside of the pipe.

Figure 2.22 illustrates the nomenclature and process.

Where

A_1 = Required reinforcement area

$$= t_h d_1 (2 - \sin\beta) \quad \text{(Code Equation 6)} \tag{2.17}$$

A_2 = Area due to excess thickness in the run pipe wall

$$= (2d_2 - d_1)(T_h - t_h - c) \quad \text{(Code Equation 7)} \tag{2.18}$$

A_3 = Area due to excess thickness in the branch pipe wall

$$= 2L_4(T_b - t_b - c)/\sin\beta \quad \text{(Code Equation 8)} \tag{2.19}$$

A_4 = Area provided by welds and attached reinforcements
d_1 = Effective length of run pipe removed at the branch

$$= [D_b - 2(T_b - c)]/\sin\beta \tag{2.20}$$

d_2 = Half-width of the reinforcement zone
= The greater of d_1 or $(T_b - c) + (T_h - c) + d_1/2$, but not more than D_h (the run pipe *OD*)
L_4 = Height of the reinforcement zone outside of the run pipe
= The lesser of $2.5(T_b - c) + T_r$ or $2.5(T_h - c)$
T_r = Minimum thickness of re-pad or saddle made from pipe, or nominal thickness if made from plate
β = Smaller of the angles between the intersecting axes of the branch and run pipes

The subscripts b and h refer to the branch and run pipe (or header pipe), respectively. In order to satisfy the reinforcement requirements of B31.3,

$$A_2 + A_3 + A_4 \geq A_1 \text{(Code Equation 6a)} \tag{2.21}$$

The angle β is used in the evaluation because a lateral connection, a branch connection with a β other than 90°, creates a larger hole in the pipe. The larger hole must be considered in d_1. For a lateral, d_1 is the branch pipe inside diameter, considering mill tolerance and corrosion/erosion allowance, divided by $\sin\beta$. The $(2 - \sin\beta)$ term is used to provide additional reinforcement that is considered to be appropriate because of the geometry of the branch connection.

The pressure design thickness is the pressure design thickness of the run pipe, with one exception. If the run pipe is welded and the branch does not intersect the weld, the weld quality factor E and strength reduction factor only reduce the allowable stress at the location of the weld.

Only the pressure design thickness is used in calculating the required area since only the pressure design thickness is required to resist internal pressure. Corrosion allowance and mill tolerance at the hole are obviously of no consequence.

The area removed, A_1, must be replaced by available area around the opening. This area is available from excess wall thickness that may be available in the branch and run pipes as well as added reinforcement and the fillet welds that attach the added reinforcement. The metal must be relatively close to the opening of the run pipe to reinforce it. Therefore, the metal must be within a certain limited area in order to be considered appropriate reinforcement of the opening.

The limit of reinforcement along the run pipe, taken as a dimension from the centerline of the branch pipe where it intersects the run pipe wall, is d_2, defined by

$$d_2 = \text{greater of } d_1 \text{ or} (T_b - c) + (T_h - c) + d_1/2 \tag{2.22}$$

but $d_2 \leq D_h$ where

D_h = outside diameter of header or run pipe
T_b = minimum thickness of branch pipe
T_h = minimum thickness of run pipe
c = allowance (mechanical, corrosion, and erosion)

The limit of reinforcement along the branch pipe measured from the outside surface of the run pipe is L_4, defined as the lesser of $2.5(T_h - c)$ and $2.5(T_b - c) + T_r$, where T_r is the minimum thickness of reinforcement.

The reinforcement within this zone is required to exceed A_1. This reinforcement consists of excess thickness available in the run pipe (A_2), excess thickness available in the branch pipe (A_3), and additional reinforcement (A_4). This can be calculated as follows:

$$A_2 = (2d_2 - d_1)(T_h - t_h - c) \text{ (Code Equation 7)} \tag{2.23}$$

$$A_3 = 2L_4(T_b - t_b - c)/\sin\beta \text{ (Code Equation 8)} \tag{2.24}$$

The area A_4 is the area of properly attached reinforcement and the welds that are within the limits or reinforcement. The code specifies the minimum weld sizes in Paragraph 328.5.4. The designer is directed to assume that the minimum dimensions specified by the code are provided, unless the welder is specifically directed to make larger welds. The ASME B31.3 Code does not require the designer to specify branch connection weld size, because generally acceptable minimum sizes are specified by the code. Additionally, the ASME B31.3 Code differs from the ASME BPVC in that strength calculations for load paths through the weld joints are not required.

Some specific types of branch connections are presumed to be acceptable. This includes listed fittings (e.g., ASME B16.9 tees and MSS SP-9 branch connection fittings). It also includes the following:

- For branch connections 2 in. or less that do not exceed one-fourth of the nominal size of the run pipe, threaded or socket welded couplings or half couplings (Class 2000 or higher) are

presumed to provide sufficient reinforcement as long as the minimum thickness of the coupling is at least as thick as the branch pipe.
- Branch connection fittings qualified as per Paragraph 304.7.2 are acceptable.

2.3.22 Flexibility analysis

In flexibility analysis, the response of the system to loads is calculated. The objectives of flexibility analysis are to calculate stress in the pipe; loads on supports, restraints, and equipment; and displacement of the pipe. It is essentially a beam analysis model on the pipe centerline. The basic principles include the following:

- The analysis is based on nominal dimensions of the pipe.
- The effect of components such as elbows and tees on piping flexibility and stress is considered by the inclusion of flexibility factors and stress intensification factors.
- For thermal stresses, only moment and torsion are typically included. Stresses due to shear and axial loads are generally not significant. However, Code Paragraph 319.2.3(c) directs the analyst to include these stresses in conditions where they may be significant.
- The modulus of elasticity at 70 °F (21 °C) is normally used in the analysis. As a result, no elastic modulus adjustment is required.

Similar to B31.1, B31.3 requires a formal flexibility analysis unless certain exemption criteria are met, as stated in Paragraph 319.4.1. The three exemptions are as follows:

- A system that duplicates or replaces, without significant change, a system operating with a successful service record
- A system that can be readily judged adequate by comparison with previously analyzed systems
- A system of uniform size, with no more than two points of fixation (anchors) and no intermediate restraints, and that satisfies the following simplified empirical equation from ASME B31.3 §319.4.1(c):

$$K_1 \geq \frac{Dy}{(L-U)^2} \tag{2.25}$$

where

D = outside diameter of pipe, in. (mm)
$K_1 = 30S_A/E_a$ (in./ft.)^2 or $208{,}000S_A/E_a$ (mm/m)^2
E_a = reference modulus of elasticity at 70 °F (21 °C), ksi (MPa)

$$\begin{aligned} S_A &= \text{allowable displacement stress range as per Equation 2.23, ksi} \\ &\quad (\text{MPa})(\text{See B31.3 §302.3.5}) \\ &= f(1.25S_c + 0.25S_h) \end{aligned} \tag{2.26}$$

S_c = basic allowable stress at the minimum metal temperature expected during the displacement cycle under analysis, ksi (MPa)
S_h = basic allowable stress at the maximum metal temperature expected during the displacement cycle under analysis, ksi (MPa)

$f = 6.0(N)^{-0.2} \leq f_m$ (B31.3 §302.3.5)

= stress range reduction factor. S_c and S_h are limited to 20 ksi (138 MPa) maximum when $f > 1.0$. Note that f_m is the maximum value for the stress range factor (f); $f_m = 1.2$ for ferrous materials with specified minimum tensile strengths $\leq$75 ksi (517 MPa) and at metal temperatures $\leq$700 °F (371 °C). Otherwise, $f_m = 1.0$

L = developed length of piping between anchors, ft. (m)

U = anchor distance, straight line between anchors, ft. (m)

y = resultant of total displacement strains, in. (mm), to be absorbed by the piping system; displacement of equipment to which the pipe is attached (end displacement of the piping system) should be included

Equation 2.26 tends to be very conservative. That said, there are a number of warning statements within the code regarding limits to its applicability. The equation provides no indication of the end reactions, which would need to be considered in any case for load-sensitive equipment.

Exemption one (§319.4.1(a)) is basically a means of grandfathering a successful design. The problem is determining how long a system must operate in order to demonstrate that the design is acceptable. This matter is a judgment call on the part of the engineer but should not be blindly used to accept a design without careful consideration.

Exemption two (§319.4.1(b) and §319.4.2(a)) relies on the judgment of an engineer who, based on experience, can determine that a system has adequate flexibility.

Exemption three (§319.4.1(c)) uses a simplified equation that has limited applicability. The requirements for its use are that the system is of uniform size, has no more than two points of fixation, and has no intermediate restraints.

The code does not indicate when a formal stress analysis is required. There are a number of guidelines in use by various organizations that indicate which types of lines should be evaluated by a formal stress analysis. Generally, the guidelines require that lines at higher combinations of size and temperature or larger lines that are attached to load-sensitive equipment require a formal stress analysis.

2.3.23 Pressure testing

2.3.23.1 Overview of test requirements

ASME B31.3 requires leak testing of all piping systems other than Category D systems. For Category D Fluid Service, a piping system may, at the owner's option, be put in service without a leak test and examined for leakage during the initial operation of the system. This is an initial service leak test. For all other piping, the following options are available:

- Hydrostatic test
- Pneumatic test
- Hydropneumatic test
- Alternative leak test

An alternative leak test (*see* "Alternative Leak Test" (§345.9)) is only allowed by ASME B31.3 (§345.1(c)) when

- exposure of the piping to water via a hydrostatic test would damage the linings or internal insulation or contaminate a process that would be hazardous, corrosive, or inoperative in the presence of moisture;
- a pneumatic test is considered by the owner to entail an unacceptable risk due to the potential release of stored energy in the system (the danger of a pneumatic test increases with the pressure and contained volume); or
- a hydrostatic test or pneumatic test would present either an undue risk of release of energy stored in the system (i.e., of an explosion) or the danger of brittle fracture due to low metal temperature during the test.

A leak test is required after any heat treatment has been completed (§345.2.2(b)). If repairs or additions are made following a leak test, the affected piping must be retested unless the repairs or additions are minor and the owner waives retest (§345.2.6).

All joints and connections, except those previously tested, must be left uninsulated and exposed for the leak test. B31.3 Code allows painting of the joints prior to the test except when the joint is to be sensitive leak-tested; however, paint can effectively seal small leaks to extremely high pressures. These small leaks can start leaking in service if the paint film fails (§345.3.1).

Pressure is required to be held for at least 10 min and as long as required to completely examine the piping system (§345.2.2(a)). All joints and connections must be visually inspected for leakage. There is no provision in B31.3 Code for substituting a monitoring or pressure decay for the 100% visual examination of the pipe joints during the hydrotest.

Piping subassemblies may be tested either separately or as assembled piping. This allows testing subassemblies and insulating them prior to leak testing the entire system (§345.2.3).

Beginning with the 2008 edition of the code, Paragraph 345.2.3(b) was revised to state that flanged joints at which a blank or blind is used to isolate equipment or other piping during a test need not be leak-tested.

Paragraph 345.2.7 of B31.3 requires test records but they need not be retained after completion of the test if a certification by the inspector states that the piping has satisfactorily passed pressure testing requirements of B31.3.

2.3.23.2 Hydrostatic test (§345.4)

A hydrostatic test is the preferred method, because it is conducted at a higher pressure, which has beneficial effects, such as crack blunting and warm prestressing, and entails less risk than a pneumatic test. These reduce the risk of crack growth and brittle fracture after the hydrotest when the pipe is placed in service. The test is conducted at a pressure, P_T, of 1.5 times the design pressure, P, times a temperature correction factor. The temperature correction factor compensates for the fact that the test may be conducted at a lower temperature, where the material has a higher strength than at the design condition. The equation is

$$P_T = 1.5PR_r \tag{2.27}$$

where

S_T = allowable stress at test temperature
S = allowable stress at design temperature
R_r = the ratio of S_T/S for components without established ratings
or
R_r = the ratio of the component rating at the test temperature to the component rating at component design temperature for components with established ratings
$R_r \leq 6.5$ in any event

The value of R_r cannot be less than 1 and cannot exceed 6.5. The value 6.5 is used for ratios that are higher than that. The ratio R_r was introduced in the 2008 edition to clarify how rated components should be considered when determining the test pressure.

If the test pressure determined in Equation 2.27 results in a nominal pressure stress or longitudinal stress in excess of the yield strength of the material at the test temperature or a pressure more than 1.5 times the component rating at the test temperature, the test pressure may be reduced to a value that does not exceed those limits. If the piping leak test is combined with a pressure vessel, it is also permitted to reduce the test pressure if it is necessary to do so to avoid overpressuring the vessel when it is not practicable to isolate the piping from the vessel for the purpose of testing them separately and if the owner approves. In this case, the test pressure may be reduced to the vessel test pressure but must be at least 77% of the hydrotest pressure required by Equation 2.27.

2.3.23.3 Pneumatic test (§345.5)

A pneumatic test poses a significant hazard due to the amount of stored energy in the compressed gas. A rupture could result in an explosive release of energy. For example, an explosion of a 200 ft. (60 m) of 36 in. pipe containing 500 psi (3500 kPa) can create a blast wave nearly equivalent to 80 lb (35 kg) of TNT. The hazard is proportional to both pressure and volume. Due to this potential hazard, pneumatic test pressure (P_T) is specified to be not less than 1.1 times the design pressure (P), but not more than the lesser of 1.33 times the design pressure or the pressure that would produce a nominal pressure stress or longitudinal stress in excess of 90% of the yield strength of any component at the test temperature. In addition, specific precautions are required such as requiring an adequately sized pressure relief valve set no higher than P_T plus the lesser of 50 psi (345 kPa) or 10% of the test pressure. An intermediate hold at the lesser of one-half of the test pressure or 25 psi (170 kPa) with visual inspection of all joints is required prior to bringing the pressure gradually up to the full test pressure.

2.3.23.4 Hydropneumatic test (§345.6)

A hydropneumatic test involves having part of the system filled with water and part of the system filled with pressurized air. The portions of the system filled with water can be tested at a higher pressure than would be permitted for a pneumatic test. The portions of the system filled with compressed gas are subjected to the limitations and requirements for a pneumatic test.

2.3.23.5 Alternative leak test (§345.9)

An alternate leak test is allowed, with the owner's approval, when neither a hydrostatic nor a pneumatic leak test would be possible or safe. An alternative leak test contains the following required elements:

- A detailed inspection of all weld joints, including 100% radiographic or ultrasonic examination of all circumferential and longitudinal seam welds and liquid penetrant or magnetic particle examination of all welds, including structural attachment welds, that cannot be radiographed
- A formal flexibility analysis
- A sensitive leak test in accord (§345.8) with a method specified in the ASME BPVC

2.3.23.6 Requirements for nonmetallic piping (§A345)

The leak test rules in the base code, described in the aforementioned paragraphs, are generally applicable to nonmetallic piping, with a few exceptions. The hydrotest pressure for nonmetallics other than thermoplastics (e.g., reinforced plastic fiberglass pipe) and metallic piping lined with nonmetals is 1.5 times the design pressure, but not more than 1.5 times the maximum rated pressure of the lowest rated component in the system. There is no temperature correction factor.

It is important not to overpressure fiberglass piping systems as excessive hydrotest pressures have caused subsequent failures in service. For thermoplastic piping, a temperature correction factor is used, the same as for metallic piping, except that the allowable stresses for thermoplastics in Appendix B of ASME B31.3 are used.

For metallic piping lined with nonmetals, the code test pressures for the metallic portion of the pipe apply.

Since some thermoplastics can behave in a brittle manner when they fail under compressed gas services, the code specifically prohibits PVC and chlorinated polyvinyl chloride (CPVC) from pneumatic testing, because of the hazard.

The alternative leak test is not permitted for nonmetallic piping and piping lined with nonmetals.

2.4 ASME B31.4 pipeline transportation systems for liquids

2.4.1 Hydrocarbons and other liquids

2.4.1.1 Scope

This code covers piping transporting liquids between production facilities, tank farms, natural gas processing plants, refineries, pump stations, ammonia plants, terminals (marine, rail, and truck), and other delivery and receiving points (see Figure 2.25).

Piping here consists of pipe, flanges, bolting, gaskets, valves, relief devices, fittings, and the pressure-containing parts of other piping components. It also includes hangers and supports and other equipment items necessary to prevent overstressing

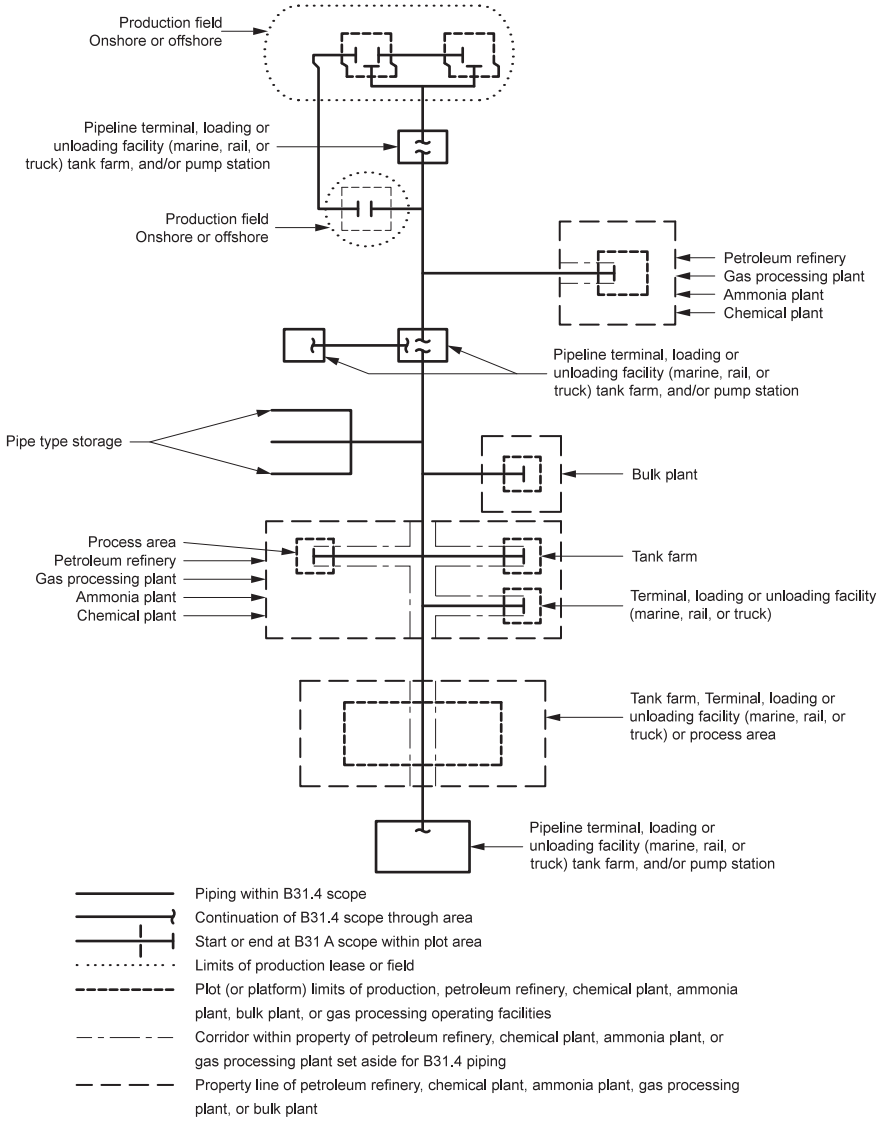

Figure 2.25 ASME B31.4 Figure 400.1.1. System diagram showing scope of ASME B31.4 excluding carbon dioxide pipeline systems
(Courtesy of ASME).

the pressure-containing parts. B31.4 Code does not include support structures such as frames of buildings, stanchions, or foundations or any equipment. The requirements for offshore pipelines are found in Chapter IX. The requirements for carbon dioxide pipelines are found in Chapter X. The requirements for slurry pipelines are found in Chapter XI.

Also included within the scope of this code are the following:

(a) Primary and associated auxiliary liquid petroleum and liquid anhydrous piping at pipeline terminals (marine, rail, and truck), tank farms, pump stations, pressure reducing stations, and metering stations, including scraper traps, strainers, and power loops
(b) Storage and working tanks, including pipe-type storage fabricated from pipe and fittings and piping interconnecting these facilities
(c) Liquid petroleum and liquid anhydrous ammonia piping located on property that has been set aside for such piping within petroleum refinery, natural gasoline, gas processing, ammonia, and bulk plants
(d) Those aspects of operation and maintenance of liquid pipeline systems relating to the safety and protection of the general public, operating company personnel, environment, property, and the piping systems

Key changes to the ASME B31.4, 2012 edition, include a new chapter on carbon dioxide piping and a new chapter on slurry piping.

B31.4 does NOT apply to the following:

- Auxiliary piping, such as water, air, steam, lubricating oil, gas, and fuel
- Pressure vessels, heat exchangers, pumps, meters, and other such equipment including internal piping and connections for piping except as limited by Paragraph 423.2.4(b)
- Piping designed for internal pressures
  (a) at or below 15 psi (1 bar) gauge pressure regardless of temperature and
  (b) above 15 psi (1 bar) gauge pressure if design temperature is below −20 °F (−30 °C) or above 250 °F (120 °C)
- Casing, tubing, or pipe used in oil wells, wellhead assemblies, oil and gas separators, crude oil production tanks, and other producing facilities
- Petroleum refinery, natural gasoline, gas processing, ammonia, carbon dioxide processing, and bulk plant piping, except as covered under Paragraph 400.1.1(c)
- Gas transmission and distribution piping
- The design and fabrication of proprietary items of equipment, apparatus, or instruments, except as limited by Paragraph 423.2.4(b)
- Ammonia refrigeration piping systems provided for in ASME B31.5, Refrigeration Piping Code
- Carbon dioxide gathering and field distribution system (Figure 2.26)

2.4.2 Design conditions

Paragraph 401 defines the pressures, temperatures, and various forces applicable to the design of piping systems within the scope of B31.4. It also takes into account considerations that shall be given to ambient and mechanical influences and various loadings.

2.4.2.1 Design criteria

The design requirements of B31.4 are adequate for public safety under conditions usually encountered in piping systems within the scope of the code, including lines within villages, towns, cities, and industrial areas. However, it is the responsibility of the

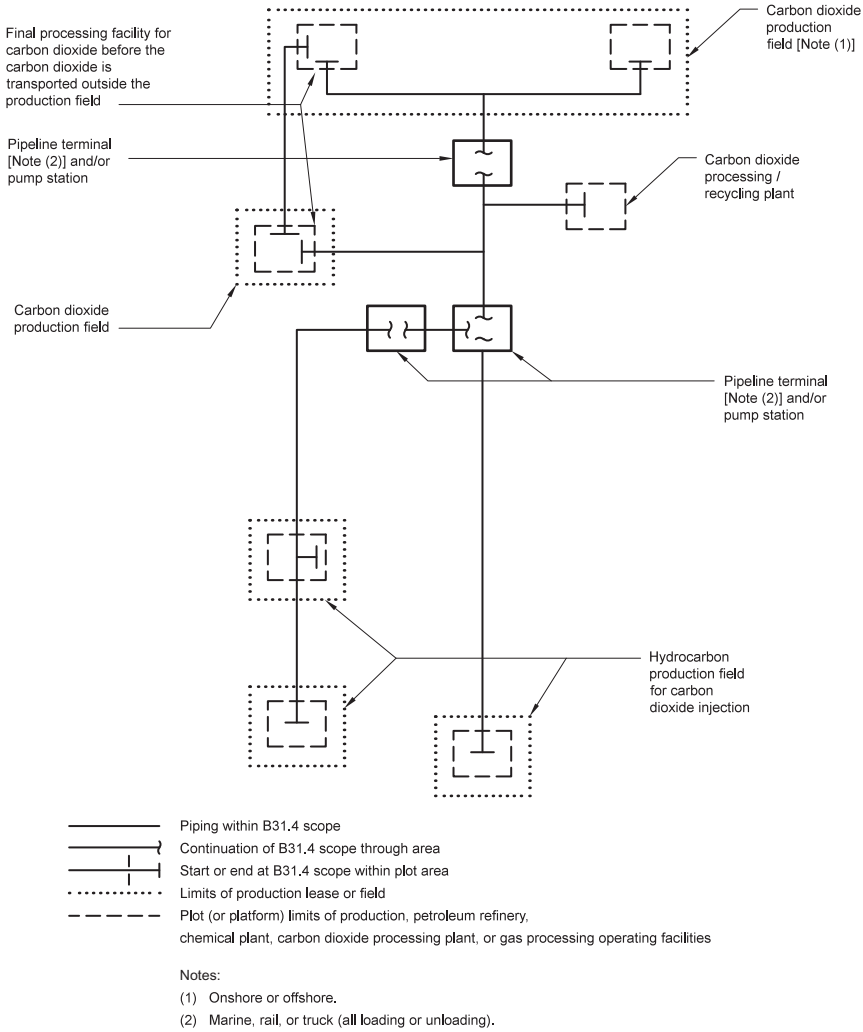

Figure 2.26 ASME B31.4 Figure 400.1.2. Diagram showing scope of ASME B31.4 for carbon dioxide pipeline systems
(Courtesy of ASME).

design engineer to provide reasonable protection to prevent damage to the pipeline from unusual external conditions that may be encountered in river crossings, inland coastal water areas, bridges, areas of heavy traffic, long self-supported spans, unstable ground, vibration, weight of special attachments, or forces resulting from abnormal thermal conditions. Some of the protective measures the design engineer may provide include encasing with steel pipe of larger diameter, increasing the wall thickness, lowering the line to a greater depth, or indicating the pressure of the line with additional markers.

2.4.2.2 Design pressure

The nominal wall thickness of straight sections of steel pipe should be equal to or greater than t_n determined in accordance with the following equation:

$$t_n = t + A \tag{2.28}$$

where

t_n = nominal wall thickness satisfying requirements for pressure and allowances
t = pressure design wall thickness, in. (mm)
= Equation 2.26
A = sum of allowances for threading and grooving as required under Paragraph 402.4.2, corrosion as required under Paragraph 402.4.1, and increase in wall thickness if used as protective measure under Paragraph 402.1
P_i = internal design gauge pressure (see Paragraph 401.2.2), psi (bar)
D = outside diameter of pipe, in. (mm)
S = applicable allowable stress value, psi (MPa)
= $0.72 \times E \times$ specified minimum yield of pipe, psi (MPa)
= Figure 2.27
0.72 = design factor based on nominal wall thickness. In setting design factor, due consideration has been given to and allowance has been made for the underthickness tolerance and maximum allowable depth of imperfections provided for in the specifications approved by the code
E = weld joint factor (see Paragraph 402.4.3 and Table 402.4.3)
= Figure 2.28

2.4.2.3 Design temperature

The design temperature is the metal temperature expected in normal operation. It is not necessary to vary the design stress for metal temperatures between −20 °F (−30 °C) and 250 °F (120 °C). However, some of the materials conforming to specifications approved for use under this code may not have properties suitable for the lower portion of the temperature band covered by this code.

2.4.2.4 Straight pipe under external pressure

Pipelines within the scope of this code may be subject to conditions during construction and operation where the external pressure exceeds the internal pressure (vacuum within the pipe or pressure outside the pipe when submerged). The pipe wall selected shall provide adequate strength to prevent collapse, taking into consideration mechanical properties, variations in wall thickness permitted by material specifications, out of roundness, bending stresses, and external loads (see Paragraph 401.2.2).

2.4.2.5 Branch connections

Branch connections may be made by means of tees, crosses, integrally reinforced extruded outlet headers, or welded connections and shall be designed in accordance with the following requirements:

(a) *Tees and crosses*

(1) The minimum metal thickness of flanged or threaded tees and crosses shall not be less than specified for the pressures and temperatures in the applicable American National Standard or the MSS Standard Practice.

(2) Steel butt welding tees and crosses shall comply with ASME B16.9 or MSS SP-75 and shall have pressure and temperature ratings based on the same stress values as were used in establishing the pressure and temperature limitations for pipe of the same or equivalent material.

(3) Steel butt welding tees and crosses may be used for all ratios of branch diameter to header diameter and all ratios of design hoop stress to specified minimum yield strength of the adjoining header and branch pipe, provided they comply with 92 above.

(b) *Integrally reinforced extruded outlet headers*

(1) Integrally reinforced extruded outlet headers may be used for all ratios of branch diameter to header diameter and all ratios of design hoop stress to specified minimum yield

Table 402.3.1(a)
Tabulation of examples of allowable stresses for reference use in piping systems within the scope of this code

Specification	Grade	Specified Min. Yield Strength, psi (MPa)	Weld Joint Factor *E*	Allowable Stress Value *S*, -20 °F to 250 °F (–30 °C to 120 °C), psi (MPa)
Seamless				
API 5L	A25	25,000 (172)	1.00	18,000 (124)
API 5L(ASTM A 53, ASTM A 106	A	30,000 (207)	1.00	21,600 (149)
API 5L, ASTM A 53, ASTM A 106	B	35,000 (241)	1.00	25,200 (174)
API 5L	X42	42,000 (289)	1.00	30,250 (208)
API 5L	X46	46,000 (317)	1.00	33,100 (228)
API 5L	X52	52,000 (358)	1.00	37,450 (258)
API 5L	X56	56,000 (386)	1.00	40,300 (278)
API 5L	X60	60,000 (413)	1.00	43,200 (298)
API 5L	X65	65,000 (448)	1.00	46,800 (323)
API 5L	X70	70,000 (482)	1.00	50,400 (347)
API 5L	X80	80,000 (551)	1.00	57,600 (397)
ASTM A 106	C	40,000 (278)	1.00	28,800 (199)
ASTM A 333	6	35,000 (241)	1.00	25,000 (174)
ASTM A 524	I	35,000 (241)	1.00	25,200 (174)
ASTM A 524	H	30,000 (207)	1.00	21,600 (149)
Furnace Butt Welded, Continuous Welded				
ASTM A 53	...	25,000 (172)	0.60	10,800 (74)
API 5L Classes I and II	A25	25,000 (172)	0.60	10,800 (74)
Electric Resistance Welded and Electric Flash Welded				
API 51	A25	25,000 (172)	1.00	18,000 (124)
API 5L, ASTM A 53, ASTM A 135	A	30,000 (207)	1.00	21,600 (149)
API 5L, ASTM A 53, ASTM A 135	B	35,000 (241)	1.00	25,200 (174)
API 5L	X42	42,000 (289)	1.00	30,250 (208)
API 5L	X46	46,000 (317)	1.00	33,100 (228)
API 5L	X52	52,000 (358)	1.00	37,450 (258)
API 5L	X56	56,000 (386)	1.00	40,300 (279)
API 5L	X60	60,000 (413)	1.00	43,200 (297)
API 5L	X65	65,000 (448)	1.00	4b,800 (323)
API 5L	X70	70,000 (482)	1.00	50,400 (347)
API 5L	X80	80,000 (551)	1.00	57,600 (397)
ASTM A 333	6	35,000 (241)	1.00	25,000 (174)

(continued)

Figure 2.27 ASME B31.4 Table 402.3.1(a). Allowable stresses for use in piping systems within the scope of ASME B31.4 Code.

Table 402.3.1(a) (CONT'D)
Tabulation of examples of allowable stresses for reference use in piping systems within the scope of this code

Specification	Grade	Specified min. yield strength, psi (MPa)	Weld joint factor *E*	Allowable stress value *S*, –20 °F to 250 °F (–30°C to 120°C), psi (MPa)
Electric Fusion Welded				
ASTM A 134	...		0.80	...
ASTM A 139	A	30,000 (207)	0.80	17,300 (119)
ASTM A 139	B	35,000 (241)	0.80	20,150 (139)
ASTM A 671		Note (1)	0.00 [Notes (2), (3)]	
ASTM A 671	...	Note (1)	0.70 [Note (4)]	...
ASTM A 672	...	Note (1)	0.00 [Notes (2), (3)]	...
ASTM A 672	...	Note (1)	0.80 [Note (4)]	...
Submerged Arc Welded				
API 5L	A	30,000 (207)	1.00	21,600 (149)
API 5L	B	35,000 (241)	1.00	25,200 (174)
API 5L	X42	42,000 (289)	1.00	30,250 (208)
API 5L	X46	46,000 (317)	1.00	33,100 (228)
API 5L	X52	52,000 (358)	1.00	37,450 (258)
API 5L	X56	56,000 (386)	1.00	40,300 (278)
API 5L	X60	60,000 (413)	1.00	43,200 (298)
API 5L	X65	65,000 (448)	1.00	46,800 (323)
API 5L	X70	70,000 (482)	1.00	50,400 (347)
API 5L	X80	80,000 (551)	1.00	57,600 (397)
ASTM A 381	Y35	35,000 (241)	1.00	25,200 (174)
ASTM A 381	Y42	42,000 (290)	1.00	30,250 (209)
ASTM A 381	Y46	46,000 (317)	1.00	33,100 (228)
ASTM A 381	Y48	48,000 (331)	1.00	34,550 (238)
ASTM A 381	Y50	50,000 (345)	1.00	36,000 (248)
ASTM A 381	Y52	52,000 (358)	1.00	37,450 (258)
ASTM A 381	Y60	60,000 (413)	1.00	43,200 (298)
ASTM A 381	Y65	65,000 (448)	1.00	46,800 (323)

General notes:

(a) Allowable stress values *S* shown in this table are equal to 0.72 E (weld joint factor) *X* specified minimum yield strength of the pipe.
(b) Allowable stress values shown are for new pipe of known specification. Allowble stress values for new pipe of unknown specification, ASTM A 120 specification, or used (reclaimed) pipe shall be determined in accordance with Paragraph 402.3.1.
(c) For some Code computations, particularly with regard to branch connections (see Paragraph 404.3.1(d)(3)) and expansion, flexibility, structural attachments, supports, and restraints (Chapter II, Part 5), the weld Joint factor *E* need not be considered.
(d) For specified minimum yield strength of other grades in approved specifications, refer to that particular specification.
(e) Allowable stress value for cold worked pipe subsequently heated to 600 °F (300 °C) or higher (welding excepted) shall be 75% of the value listed in table.
(f) Definitions for the various types of pipe are given in Paragraph 400.2.
(g) Metric stress levels are given in MPa (1 mega pascal = 1 million pascals).

Notes:

(1) See applicable plate specification for yield point and refer to Paragraph 402.3.1 for calculation of *S*.
(2) Factor applies for Classes 12, 22, 32, 42, and 52 only.
(3) Radiography must be performed after heat treatment
(4) Factor applies for Classes 13, 23, 33, 43, and 53 only.

Figure 2.27 Continued.

strength of the joining header and branch pipe, provided they comply with (2) through (8) below.

(2) When the design meets the limitations on geometry contained herein, the rules established are valid and meet the intent of the code. These rules cover minimum requirements and are selected to assure satisfactory performance of extruded headers

Table 402.4.3
Weld joint factor *E*

Specification no.	Pipe type [Note (1)]	Weld joint factor *E*
ASTM A 53	Seamless	1.00
	Electric resistance welded	1.00
	Furnace butt welded	0.60
ASTM A 106	Seamless	1.00
ASTM A 134	Electric fusion (arc) welded	0.80
ASTM A 135	Electric resistance welded	1.00
ASTM A 139	Electric fusion (arc) welded	0.80
ASTM A 333	Seamless	1.00
	Electric resistance weld	1.00
ASTM A 381	Double submerged arc welded	1.00
ASTM A 671	Electric fusion welded	1.00 [Notes (2), (3)]
		0.80 [Note (4)]
ASTM A 672	Electric fusion welded	1.00 [Notes (2), (3)]
		0.80 [Note (4)]
API 5L	Seamless	1.00
	Electric resistance welded	1.00
	Electric induction welded	1.00
	Submerged arc welded	1.00
	Furnace butt welded, continuous welded	0.60
Known	Known	Note (5)
Unknown	Seamless	1.00 [Note (6)]
Unknown	Electric resistance welded	1.00 [Note (6)]
Unknown	Electric fusion welded	0.80 [Note (6)]
Unknown	Over NPS 4	0.80 [Note (7)]
Unknown	NPS 4 and smaller	0.60 [Note (8)]

Notes: (1) Definitions for the various pipe types (weld joints) are given in Paragraph 400.2. (2) Factor applies for Classes 12, 22, 32, 42, and 52 only. (3) Radiography must be performed after heat treatment. (4) Factor applies for Classes 13, 23, 33, 43, and 53 only. (5) Factors shown above apply for new or used (reclaimed) pipe if pipe specification and pipe type are known. (6) Factor applies for new or used pipe of unknown specification and ASTM A 120 if type of weld joint is known. (7) Factor applies for new or used pipe of unknown specification and ASTM A 120 or for pipe over NPS 4 if type of jont is unknown. (8) Factor applies for new or used pipe of unknown specification and ASTM A 120 or for pipe NPS 4 and smaller if type of joint is unknown.

Figure 2.28 ASME B31.4 Table 402.4.3. Weld joint factor (Courtesy of ASME).

subjected to pressure. In addition, however, forces and moments are usually applied to the branch by such agencies as thermal expansion and contraction; by vibration; by dead weight of piping, valves and fittings, covering and contents; and by earth settlement. Consideration should be given to the design of extruded header to withstand these forces and moments.

(3) *Definitions*

(a) An extruded outlet header is defined as a header in which the extruded lip at the outlet has a height above the surface of the header that is equal to or greater than the radius of curvature of the external contoured portion of the outlet, that is, $h_o \geq r_o$. Refer to Figure 2.29 (Figure 404.3.1(b)(3)).

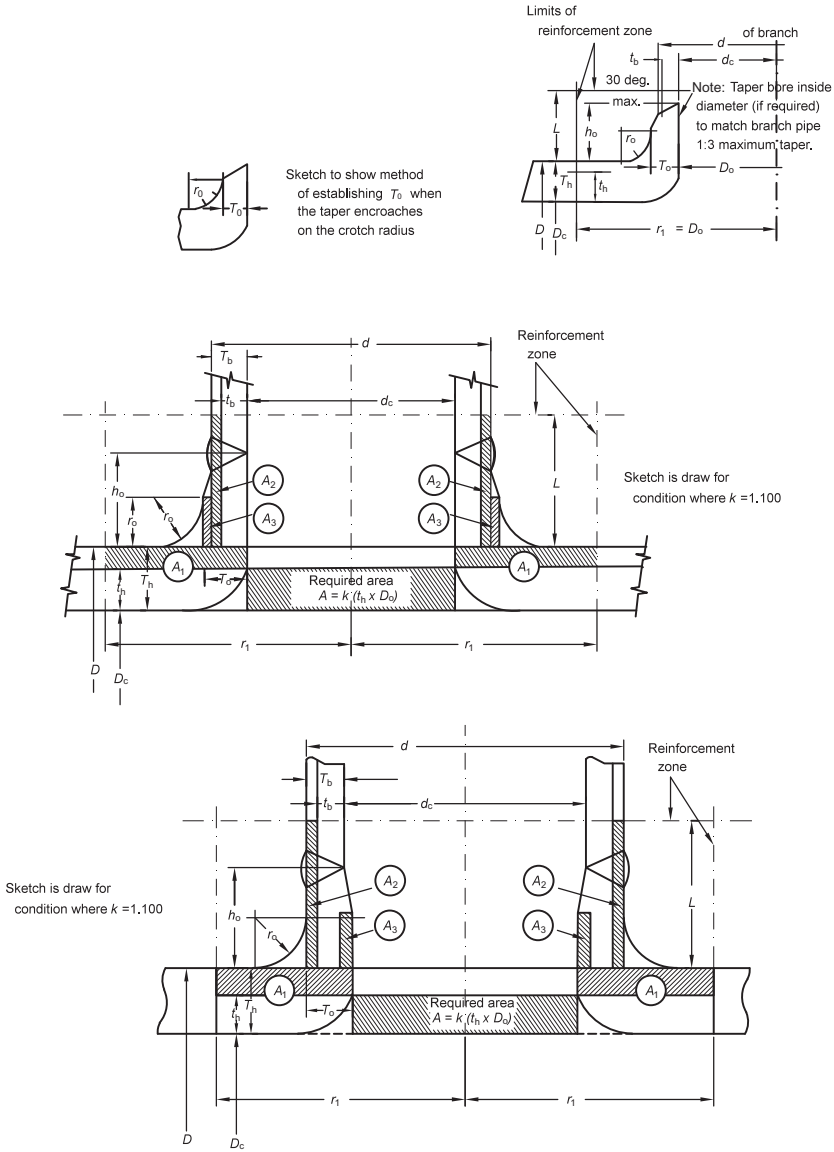

Figure 2.29 ASME B31.4 Figure 404.3.1(b)(3). Reinforced extruded outlets (Courtesy of ASME).

(b) These rules do not apply to any nozzle in which additional nonintegral material is applied in the form of rings, pads, or saddles.

(c) These rules apply only to cases where the axis of the outlet intersects and is perpendicular to the axis of the header.

(4) *Notation.* The notation used herein is illustrated in Figure 2.29 (see B31.4 Figure 404.3.1(b)(3)). All dimensions are in inches (mm):

d = outside diameter of branch pipe

d_c = internal diameter of branch pipe

D = outside diameter of header

D_c = internal diameter of header

D_o = internal diameter of extruded outlet measured at the level of the outside surface of header

h_o = height of the extruded lip. This must be equal to or greater than r_o except as shown in (4)(b).

L = height of the reinforcement zone

$= 0.7\sqrt{dT_o}$

t_b = required thickness of the branch pipe according to the wall thickness equation in Paragraph 404.1.2

T_b = actual nominal wall thickness of branch

t_h = required thickness of the header according to the wall thickness Equation 2.29 (Paragraph 404.1.2)

$$t = \frac{P_i D}{2S} \tag{2.29}$$

T_h = actual nominal wall thickness of header

T_o = finished thickness of extruded outlet measured at a height equal to r_o above the outside surface of the header

r_1 = half-width or reinforcement zone (equal to D_o)

r_o = radius of curvature or external contoured portion of outlet measured in the plane containing the axes of the header and branch. This is subject to the following limitations:

1. Minimum radius. This dimension shall not be less than $0.05d$, except that on branch diameters larger than NPS 30, it need not exceed 1.50 in. (38 mm).

2. Maximum radius. For outlet pipe sizes NPS 8 and larger, this dimension shall not exceed $0.10dd + 0.50$ in. (13 mm). For outlet pipe sizes less than 8 NPS 8, this dimension shall not be greater than 1.25 in. (32 mm).

3. When the external contour contains more than one radius, the radius of any arc sector of approximately 45° shall meet the requirements of (a) and (b) above.

4. Machining shall not be employed in order to meet the above requirements.

a. *Required area.* The required area is defined as $A = K(t_h D_o)$, where K shall be taken as follows:

(a) For d/D greater than 0.60, $K = 1.00$.

(b) For d/D greater than 0.15 and not exceeding 0.60, $K = 0.6 + 2/3\ d/D$.

(c) For d/D equal to or less than 0.15, $K = 0.70$. The design must meet the criteria that the reinforcement area defined in (6) is not less than the required area.

b. *Reinforcement area.* The reinforcement area shall be the sum of areas $A_1 + A_2 + A_3$ as defined below:

(a) Area A_1. The area lying within the reinforcement zone resulting from any excess thickness available in the header wall, that is,

$$A_1 = D_o(T_h - t_h)$$

(b) Area A_2. The area lying within the reinforcement zone resulting from any excess thickness available in the branch pipe wall, that is,

$$A_2 = 2L(T_b - t_b)$$

(c) Area A_3. The area lying within the reinforcement zone resulting from excess thickness available in the extruded outlet lip, that is,

$$A_3 = 2r_o(T_o - t_b)$$

c. *Reinforcement of multiple openings.* The reinforcements outlined in Paragraph 404.3.1(e) shall be followed, except that the required area and reinforcement shall be as given in (5) and (6) above.

d. The manufacturer shall be responsible for establishing and marking on the section containing extruded outlets, the design pressure and temperature, "Established under provisions of ASME B31.4," and the manufacturer's name or trademark.

(c) *Welded branch connections*

Welded branch connections shall be as shown in Figures 2.30–2.32 (see B31.4 Figures 404.3.1(c)(1), 404.3.1(c)(2), and 404.3.1(c)(3)). Design shall meet the minimum requirements listed in Table 2.28 (see B31.4 Table 404.3.1(c)) and described by items (1), (2), (3), and (4). Where reinforcement is required, items (5) and (6) shall apply:

(1) Smoothly contoured wrought tees or crosses of proven design or integrally reinforced extruded headers are preferred. When such tees, crosses, or headers are not used, the reinforcing member shall extend completely around the circumference of the header (see Figure 2.30 (B31.4 Figure 404.3.1(c)(1) for typical constructions)). The inside edges of the finished opening whenever possible shall be rounded to a 1/8 in. (3 mm) radius. If the encircling member is thicker than the header and its ends are to be welded to the header, the ends shall be chamfered (at approximately 45°) down to a thickness not in excess of the header thickness and continuous fillet welds shall be made. Pads, partial saddles, or other types of localized reinforcements are prohibited.

(2) The reinforcement member may be of the complete encirclement type (see Figure 2.30 (B31.4 Figure 404.3.1(c)(1))), pad or saddle type (see Figure 2.31 (B31.4 Figure 404.3.1(c)(2))), or welding outlet fitting type. Where attached to the header by fillet welding, the edges of the reinforcement member shall be chamfered (at approximately 45°) down to a thickness not in excess of the header thickness. The diameter of the hole cut in the header pipe for a branch connection shall not exceed the outside diameter of the branch connection by more than ¼ in. (6 mm).

(3) Reinforcement for branch connections with hole cut NPS 2 or smaller is not required (see Figure 2.32 (B31.4 Figure 404.3.1(c)(3)) for typical details); however, care shall be taken to provide suitable protection against vibrations and other external forces to which these small branch connections are frequently subjected.

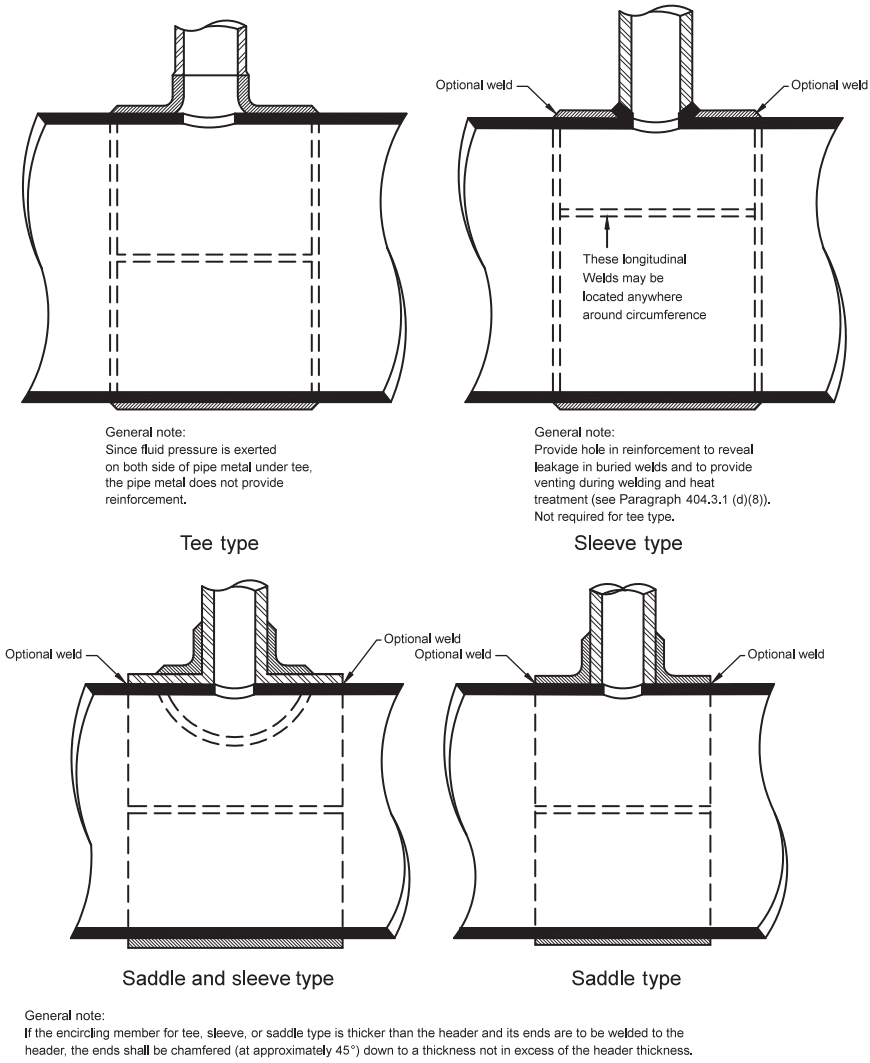

Figure 2.30 ASME B31.4 Figure 404.3.1(c)(1). Welding details for openings with complete encirclement types of reinforcement
(Courtesy of ASME).

(4) Reinforcement of opening is not mandatory; however, reinforcement may be required for cases involving pressure over 100 psi (7 bar), thin-walled pipe, or severe external loads.

(5) If a reinforcement member is required and the branch diameter is such that a localized type of reinforcement member would extend around more than half the circumference of the header, then a complete encirclement type of reinforcement shall be used, regardless of the design hoop stress, or a smoothly contoured wrought steel tee or cross of proven design or extruded header may be used.

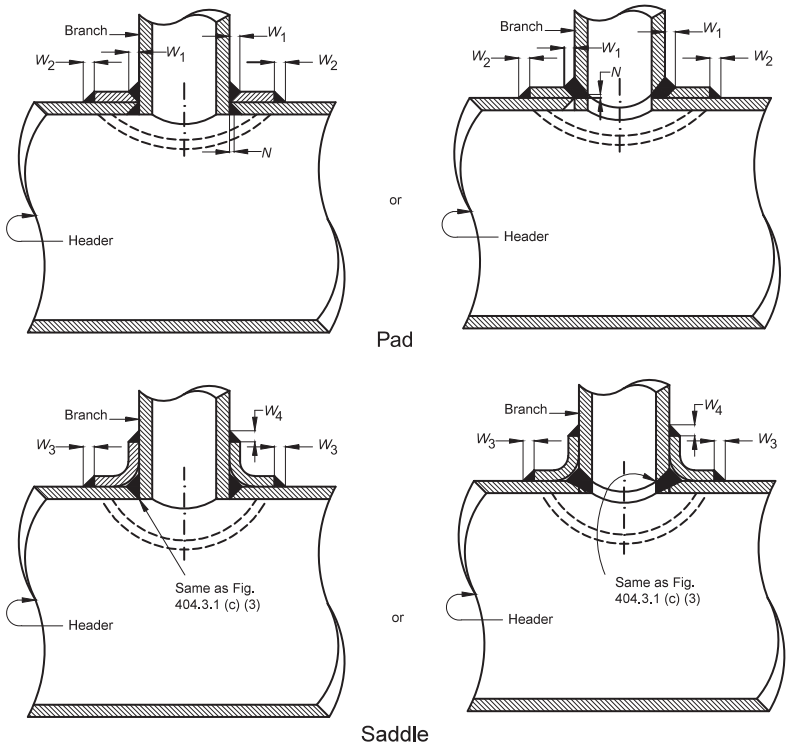

M = nominal wall thickness of pad reinforcement member
M_b = nominal wall thickness of saddle at branch end
M_h = nominal wall thickness of saddle at header end
N = 1/16 in. (1.5 mm) (min.), 1/8 in. (3 mm) (max.)(unless back welded or backing strip is used)
T_b = nominal wall thickness of branch
T_h = nominal wall thickness of header
W_1 (min.) = the smaller of T_b, M, or 3/8 in. (10 mm)
W_2 (max.) = approx. T_h
W_2 (min.) = the smaller of 0.7 T_h, 0.7M, or 1/2 in. (13 mm)
W_3 (max.) = approx. T_h
W_3 (min.) = the smaller of 0.7 T_h, 0.7 M_h, or 1/2 in. (13 mm)
W_4 (min.) = the smaller of T_b, M_b, or 3/8 in. (10 mm)

General notes:
(a) All welds are to have equal leg dimensions and a minimum throat equal to 0.707 x leg dimension.
(b) If the reinforcing member is thicker at its edge than the header, the edge shall be chamfered (at approximately 45°) down to a thickness such that leg dimensions of the fillet weld shall be within the minimum and maximum dimensions specified above.
(c) A hole shall be provided in reinforcement to reveal leakage in buried welds and to provide venting during welding and heat treatment (see Paragraph 404.3.1(d)(8)).

Figure 2.31 ASME B31.4 Figure 404.3.1(c)(2). Welding details for openings with localized type reinforcement
(Courtesy of ASME).

(6) The reinforcement shall be designed in accordance with Paragraph 404.3.19d.

(d) *Reinforcement of single openings*

(1) When welded branch connections are made to pipe in the form of a single connection or in a header or manifold as a series of connections, the design shall be adequate to control the stress levels in the pipe within safe limits. The construction shall take

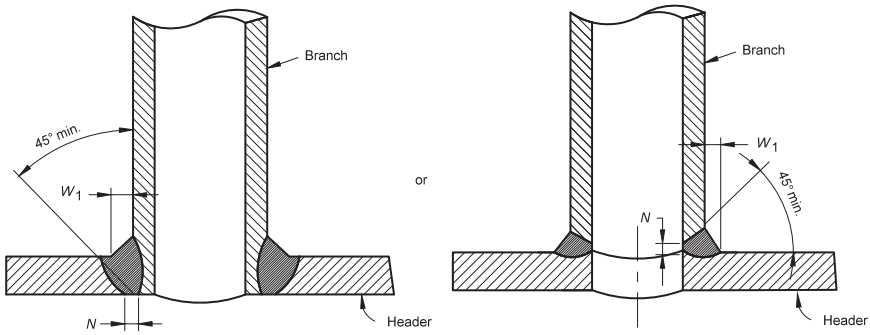

General note:
When a welding saddle is used, it shall be inserted over this type of connection. See Fig. 404.3.1 (c) (2).

T_h = nominal wall thickness of header
T_b = nominal wall thickness of branch
W_1(min.) = the smaller of T_h, T_b or 3/8 in. (10 mm)
N = 1/16 in. (1.5 mm) (min.). 1/8 in. (3 mm) (max.) unless back welded or backing strip is used

Figure 2.32 ASME B31.4 Figure 404.3.1(c)(3). Welding details for openings without reinforcement other than that in header and branch walls (Courtesy of ASME).

Table 2.28 ASME B31.4 Code Table 404.3.1(c). Design Criteria For Welded Branch Connections

Ratio of design hoop stress to speeded min. yield strength of the header	Ratio of diameter of hole cut for branch connection to nominal header diameter		
	25% or less	More than 25-50%	More than 50%
20% or less	(4)	(4)	(4)(5)
More than 20-50%	(2)(3)	(2)	(1)
More than 50%	(2)(3)	(2)	(1)

(Courtesy of ASME)

cognizance of the stresses in the remaining pipe wall due to the opening in the pipe or header, the shear stresses produced by the pressure acting on the area of the branch opening, and any external loading due to thermal movement, weight, vibration, etc., and shall meet the minimum requirements listed in Table 2.7 (B31.4 Table 404.3.1 (c)). The following paragraphs provide design rules based on the stress intensification created by the existence of a hole in an otherwise symmetrical section. External loadings, such as those due to thermal expansion or unsupported weight of connecting pipe, have not been evaluated. These factors should be given attention in unusual designs or under conditions of cyclic loading. When pipe that has been cold-worked to meet the specified minimum yield strength is used as a header containing single or

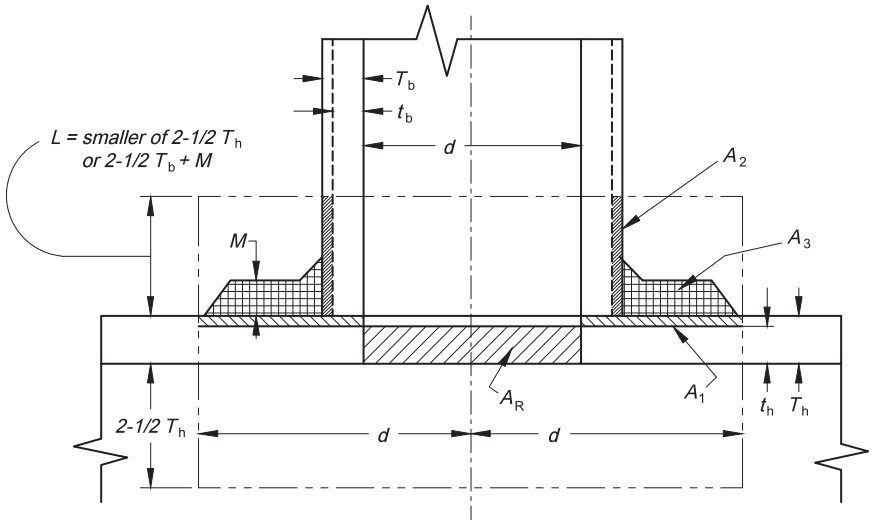

"Area of reinforcement" enclosed by —— - - —— lines
Reinforcement area required $A_R = dt_h$
Area available as reinforcement - $A_1 + A_2 + A_3$
$A_1 = (T_h - t_h)\, d$
$A_2 = 2\,(T_b - t_b)\, L$
A_3 = *summation of area of all added reinforcement, including weld areas that lie within the "area of reinforcement"*
K-104-B
$A_1 + A_2 + A_3$ *must be equal to or greater than* A_R
T_h = *nominal wall thickness of header*
T_b = *nominal wall thickness of branch*
t_b = *design branch wall thickness required by Paragraph 404.1.2*
t_h = *design header wall thickness required by Paragraph 404.1.2*
d = *length of the finished opening in the header wall (measured parallel to the axis of the header)*
M = *actual (by measurement) or nominal thickness of added reinforcement*

Figure 2.33 ASME B31.4 Figure 404.3.1(d)(2). Reinforcement of branch connections (Courtesy of ASME).

multiple welded branch connections, stresses shall be in accordance with Paragraph 404.3.1(d).

(2) The reinforcement required in the crotch section of a welded branch connection shall be determined by the rule that metal area available for reinforcement shall be equal to or greater than the required cross-sectional area as defined in (3) below and in Figure 2.33 (B31.4 Figure 404.3.1(d)(2)).

(3) The required cross-sectional area A_R is defined as the product of d times

$$t_h : A_R = dt_h \tag{2.31}$$

where

d = length of the finished opening in the header wall measured parallel to the axis of the header

t_h = design header wall thickness required by Paragraph 404.1.2. For welded pipe, when the branch does not intersect the longitudinal or spiral weld of the header, the allowable stress value for seamless pipe of comparable grade may be used in determining t_h for the purpose of reinforcement calculations only. When the branch does intersect the longitudinal or spiral weld of the header, the allowable stress value S of the header shall be used in the calculation. The allowable stress value S of the branch shall be used in calculating t_b.

(4) The area available for the reinforcement shall be the sum of the following:

(a) The cross-sectional area resulting from any excess thickness available in the header thickness (over the minimum required for the header as defined in Paragraph 404.1.2) and that lies within the reinforcement area defined in Paragraph 404.3.1(d)(5).

(b) The cross-sectional area resulting from an excess thickness available in the branch wall thickness over the minimum required for the branch and that lies within the reinforcement area as defined in Paragraph 404.3.1(d)(5).

(c) The cross-sectional area of all added reinforcing metal, including weld metal, that is welded to the header wall and lies within the reinforcement area as defined in Paragraph 404.3.1(d)(5).

(5) The reinforcement area is shown in Figure 2.33 (B31.4 Figure 404.3.1(d)(2)) and is defined as a rectangle whose length shall extend a distance d (see Paragraph 404.3.1 (d)(3)) on each side of the transverse centerline of the finished opening and whose width shall exceed a distance of 2-1/2 times the header wall thickness from the outside surface of the header wall, except that in no case shall it extend more than 2-1/2 times the thickness of the branch wall from the outside surface of the header or of the reinforcement if any.

(6) The material of any added reinforcement shall have an allowable working stress at least equal to that of the header wall, except that material of allowable stress may be used if the area is increased in direct ratio of the allowable stresses for header and reinforcement material, respectively.

(7) The material used for ring or saddle reinforcement may be of specifications differing from those of the pipe, provided that the cross-sectional area is made in correct proportions to the relative strength of the pipe and reinforcement materials at the operating temperatures and provided that it has welding qualities comparable to those of the pipe. No credit shall be taken for the additional strength of material having a higher strength than that of the part to be reinforced.

(8) The use of ribs or gussets shall not be considered as contributing to reinforcement to the branch connection. This does not prohibit the use of ribs or gussets for purposes other than reinforcement, such as stiffening.

(9) The branch shall be attached by a weld for full thickness of the branch or header wall plus a fillet weld $W1$ as shown in Figures 2.31 and 2.32 (B31.4 Figure 404.3.1(c)(2) and 404.3.1(c)(3)). The use of concave fillet welds is to be preferred to minimize corner stress concentration. Ring or saddle reinforcement shall be attached as shown by Figure 2.32 (B31.4 Figure 404.3.1(c)(2)). If the reinforcing member is thicker at its edge than the header, the edge shall be chamfered (at approximately 45°) down to a thickness so leg dimensions of the fillet weld shall be within the minimum and maximum dimensions specified in Figure 2.32 (B31.4 Figure 404.3.1(c)(2)).

(10) Reinforcement rings and saddles shall be accurately fitted to the parts to which they are attached. Figures 2.30 and 2.31 (see B31.4 Figure 404.3.1(c)(1) and 404.3.1(c)(2)) illustrate some acceptable forms of reinforcement. Branch connections attached at an angle less than 90° to the header become progressively weaker as the angle becomes less. Any such design shall be given individual study, and sufficient reinforcement shall be provided to compensate for the inherent weakness of such construction. The use of encircling ribs to support the flat or reentering surfaces is permissible and may be included in the strength considerations. The designer is cautioned that stress concentrations near the ends of partial ribs, straps, or gussets may defeat their reinforcing value, and their use is not recommended.

(e) *Reinforcement of multiple openings*

(1) Two adjacent branches should preferably be spaced at such a distance that their individual effective areas of reinforcement do not overlap. When two or more adjacent branches are spaced at less than two times their average diameter (so that their effective areas of reinforcement overlap), the group of openings shall be reinforced in accordance with Paragraph 404.3.1(d). The reinforcing metal shall be added as a combined reinforcement, the strength of which shall equal the combined strengths of the reinforcements that would be required for the separate openings. In no case shall any portion of a cross section be considered to apply to more than one opening or be evaluated more than once in a combined area.

(2) When more than two adjacent openings are to be provided with a combined reinforcement, the minimum distance between the centers of any two of these openings shall preferably be at least 1-1/2 times their average diameter, and the area of reinforcement between them shall be at least equal to 50% of the total required for these two openings on the cross section being considered.

(3) When two adjacent openings as considered under Paragraph 404.3.1(e)(2) have the distance between centers less than 1-1/3 times their average diameter, no credit for reinforcement shall be given for any of the metal between these two openings.

(4) When pipe that has been cold-worked to meet the specified minimum yield strength is used as a header containing single or multiple welded branch connections, stresses shall be in accordance with Paragraph 402.3.1(d).

(5) Any number of closely spaced adjacent openings, in any arrangement, may be reinforced as if the group were treated as one assumed opening of a diameter enclosing all such openings.

2.4.2.6 Miters

In systems intended to operate at a hoop stress of more than 20% of the specified minimum yield strength of the pipe, miter bends are prohibited. Miter bends not exceeding 12-1/2° may be used in systems operated at a hoop stress of 20% or less of the specified minimum yield strength of the pipe, and the minimum distance between miters measured at the crotch shall not be less than one pipe diameter. When the system is to be operated at a hoop stress of less than 10% of the specified minimum yield strength of the pipe, the restriction to 12-1/2° maximum miter and distance between miters will not apply. Deflections caused by misalignment up to 3° are not considered miter bends.

2.4.2.7 Expansion and flexibility

2.4.2.7.1 General

This code is applicable to both aboveground and buried piping and covers all classes of materials permitted by this code. Formal calculations are required where reasonable doubt exists as to the adequate flexibility of the piping.

Piping should be designed to have sufficient flexibility to prevent expansion or contraction from causing excessive stresses in the piping material, excessive bending moments at joints, or excessive forces or moments at points of connection to equipment or at anchorage or guide points. Allowable forces and moments on equipment may be less than for the connected piping.

Expansion calculations are necessary for buried lines if significant temperature changes are expected, such as when the line is to carry a heated oil. Thermal expansion of buried lines may cause movement at points where the line terminates, changes in direction, or changes in size. Unless such movements are restrained by suitable anchors, the necessary flexibility shall be provided.

Expansion of aboveground lines may be prevented by anchoring them so that longitudinal expansion, or contraction, due to thermal and pressure changes is absorbed by direct axial compression or tension of the pipe in the same way as for buried piping. In addition, however, beam-bending stresses shall be included and the possible elastic instability of the pipe and its supports, due to longitudinal compressive forces, shall be considered.

2.4.2.7.2 Flexibility

If expansion is not absorbed by direct axial compression of the pipe, flexibility shall be provided by the use of bends, loops, or offsets or provision shall be made to absorb thermal strains by expansion joints or couplings of the slip-joint, ball-joint, or bellows type. If expansion joints are used, anchors or ties of sufficient strength and rigidity shall be installed to provide for end forces due to fluid pressure and other causes.

2.4.2.7.3 Properties

2.4.2.7.3.1 Coefficient of thermal expansion The linear coefficient of thermal expansion for carbon and low-alloy high-tensile steel may be taken as 6.5×10^{-6} in./in./°F for temperatures up to 250 °F (11.7×10^{-6} mm/mm/°C for temperatures up to 120 °C).

2.4.2.7.3.2 Moduli of elasticity Flexibility calculations should be based on the modulus of elasticity at ambient temperature.

2.4.2.7.3.3 Poisson's ratio Poisson's ratio should be taken as 0.3 for steel.

2.4.2.7.3.4 Stress values There are fundamental differences in loading conditions for the buried, or similarly restrained, portions of the piping and the aboveground portions not subject to substantial axial restraint. Therefore, different limits on allowable longitudinal expansion stresses are necessary.

Restrained Lines. The net longitudinal compressive stress due to the combined effects of temperature rise and fluid pressure shall be computed from the equation

$$S_L = E\alpha(T_2 - T_1) - \nu S_h \tag{2.32}$$

where

S_L = longitudinal compressive stress, psi (MPa)
S_h = hoop stress due to fluid pressure, psi (MPa)
T_1 = temperature at time of installation, °F (°C)
T_2 = maximum or minimum operating temperature, °F (°C)
E = modulus of elasticity of steel, psi (MPa)
α = linear coefficient of thermal expansion, in./in./°F (mm/mm/°C)
ν = Poisson's ratio
= 0.3 for steel

Note that the net longitudinal stress becomes compressive for moderate increases of T_2 and that, according to the commonly used maximum shear theory of failure, this compressive stress adds directly to the hoop stress to increase the equivalent tensile stress available to cause yielding. As specified in Paragraph 402.3.2(c), this equivalent tensile stress should not be allowed to exceed 90% piping without substantial of the specified minimum yield strength of the pipe, calculated for nominal pipe wall thickness. Beam-bending stresses should be included in the longitudinal stress for those portions of the restrained line that are supported aboveground.

Unrestrained Lines. Stresses due to expansion for those portions of the axial restraint should be combined in accordance with the following equation:

$$S_E = \sqrt{S_b^2 + 4S_t^2} \tag{2.33a}$$

where

S_E = stress due to expansion
S_b = equivalent bending stress, psi (MPa)

$$S_b = \frac{\sqrt{(i_i M_i)^2 + (i_o M_o)^2}}{Z} \tag{2.33b}$$

S_t = torsional stress, psi (MPa)
$= M_t/2Z$
M_t = bending moment in plane of member (for members having significant orientation, such as elbows or tees; for the latter, the moments in the header and branch portions are to be considered separately), in.-lb (Nm)
M_o = bending moment out of, or transverse to, plane of member, in.-lb (Nm)
M_t = torsional moment, in.-lb (Nm)
i_i = stress intensification factor under bending in plane of member
= Figure 2.34 (B31.4 Figure 419.6.49(c))

i_o = stress intensification factor under bending out of, or transverse to, plane of member = Figure 2.34 (B31.4 Figure 419.6.49(c))
Z = section modulus of pipe, in.^{3}(cm^3)

The maximum computed expansion stress range—S_E without regard for fluid pressure stress, based on 100% of the expansion, with modulus of elasticity for the cold condition—should not exceed the allowable stress range S_A, where $S_A = 0.72$ of specified minimum yield strength of the pipe as noted in Paragraph 402.3.2(c).

The sum of the longitudinal stresses produced by pressure, live and dead loads, and those produced by occasional loads, such as wind or earthquake, should not exceed 80% of the specified minimum yield strength of the pipe, in accordance with

Description	Flexibility factor k	Stress intensification factor i_i (1)	Stress intensification factor i_o (2)	Flexibility characteristic h	Sketch
Weding elbow,[3,4,5,6,7] or pipe bend	$\frac{1.65}{h}$	$\frac{0.9}{h^{2/3}}$	$\frac{0.75}{h^{2/3}}$	$\frac{tR}{r^2}$	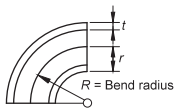
Closely spaced miter bend,[3,4,5,7] $s < r(1 + \tan\theta)$	$\frac{1.52}{h^{5/6}}$	$\frac{0.9}{h^{2/3}}$	$\frac{0.75}{h^{2/3}}$	$\frac{\cot\theta}{2}\frac{ts}{r^2}$	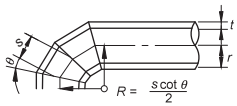
Widely spaced miter bend,[3,4,7,8] $s \geq r(1 + \tan\theta)$	$\frac{1.52}{h^{5/6}}$	$\frac{0.9}{h^{2/3}}$	$\frac{0.75}{h^{2/3}}$	$\frac{1\cot\theta}{2}\frac{t}{r}$	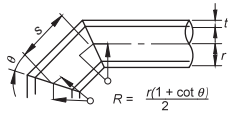
Welding tee[3,4] per ASME B16.9	1	$0.75i_o + 0.25$	$\frac{0.9}{h^{2/3}}$	$4.4\frac{t}{r}$	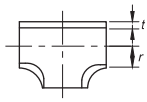
Reinforced tee[3,4,9] with pad or saddle	1	$0.75i_o + 0.25$	$\frac{0.9}{h^{2/3}}$	$\frac{(t + 1/2\,T)^{5/2}}{t^{3/2}r}$	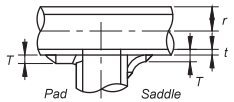
Unreinforced fabricated tee[3,4]	1	$0.75i_o + 0.25$	$\frac{0.9}{h^{2/3}}$	$\frac{t}{r}$	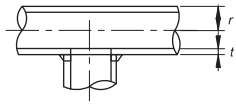
Extruded welding tee[3,4,11] $r_o \geq 0.05d$ $t_c < 1.5t$	1	$0.75i_o + 0.25$	$\frac{0.9}{h^{2/3}}$	$\left(1 + \frac{r_o}{r}\right)\frac{t}{r}$	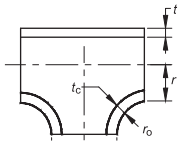

Figure 2.34 ASME B31.4 Figure 419.6.4(c). Flexibility factor "*k*" and stress intensification factor "*l*"
(Courtesy of ASME).

Description	Flexibility factor k	Stress intensification factor i_1 (1)	Stress intensification factor i_0 (2)	Flexibility characteristic h	Sketch
Butt welded Joint reducer, or welding neck flange	1	1.0		...	...
Double welded slip-on flange	1	1.2		...	...
Fillet welded joint (single welded), or single welded sllp-on flange	1	1.3		...	...
Lapped flange (with ANSI B16.9 lap-joint stub)	1	1.6		...	...
Threaded pipe joint, or threaded flange	1	2.3		...	...
Corrugated straight pipe, or corrugated or creased bend[10]	5	2.5		...	...

Notes:

(1) In-plane.
(2) Out-of-plane.
(3) For fittings and miter bends, the flexibility factors k and stress Intensification factors i in the table apply to bending in any plane and shall not be less than unity; factors for torsion equal unity. Both factors apply over the effective arc length (shown by heavy center lines in the sketches) for curved and miter elbows, and to the intersection point for tees.
(4) The values of k and i can be read directly from Chart A by entering with the characteristic h computed from the equations given, where
R = bend radius of welding elbow or pipe bend, in. (mm)
T = pad or saddle thickness, in. (mm)
d = outside diameter of branch
r = mean radius of matching pipe, in. (mm)
r_0 = see Note (11)
s = miter spacing at center line
t = nominal wall thickness of: part Itself, for elbows and curved or mlted bends; matching pipe, for welding tees; run or header, for fabricated tees (provided that If thickness Is greater than that of matching pipe, increased thickness must be maintained for at least one run OD to each side of the branch OD).
t_c = the crotch thickness of tees
θ = one-half angle between adjacent miter axes, °
(5) Where flanges are attached to one or both ends, the values of k and i in the table shall be corrected by the factors C_1 given below, which can be read directly from Chart B, entering with the computed h; one end flanged, $h^{1/6} \geq 1$; both ends flanged, $h^{1/3} \geq 1$
(6) The engineer is cautioned that cast butt welding elbows may have considerably heavier walls than that of the pipe with which they are used. Large errors may be introduced unless the effect of these greater thicknesses Is considered.
(7) In large diameter thin wall elbows and bends, pressure can significantly affect the magnitude of flexibility and stress Intensification factors. To correct values obained from table for the pressure effect, divide:

Flexibility factor k by $$1+6\frac{P}{E_c}\left(\frac{r}{t}\right)^{7/3}\left(\frac{R}{r}\right)^{1/3}$$

Stress Intensification factor /by $$1+3.25\frac{P}{E_c}\left(\frac{r}{t}\right)^{5/2}\left(\frac{R}{r}\right)^{2/3}$$

where
E_c = cold modulus of elasticity
P = gage pressure
(8) Also includes single miter joint.
(9) When $T > 1\ 1/2\ t_1$ use $h = 4.05\ t/r$.
(10) Factors shown apply to bending; flexibility factor for torsion equals 0.9.
(11) Radius of curvature of external contoured portion of outlet measured in the plane containing the axes of the run and branch. This Is subject to the following limitations:
(a) minimum radius the lesser of 0.054 or 38 mm (1.5 in.);
(b) maximum radius r_o shall not exceed:
(1) for branches DN200 (NPS 8) and larger, 0.104+ 13 mm (0.50 in.);
(2) for branches less than DN200 (NPS 8), 32 mm (1.25 in.);
(c) when the external contour contains more than one radius, the radius on any arc sector of approximately 45° shall meet the requirements of (a) and (b) above;
(d) machining shall not be employed In order to meet the above requirements.

Figure 2.34 Continued.

(Continued)

Paragraph 402.3.3(a). It is not necessary to consider wind and earthquake as occurring concurrently.

As noted in Paragraph 402.3.3(b), stresses due to test conditions are not subject to the limitations of Paragraph 402.3. It is not necessary to consider other occasional loads, such as wind and earthquake, as occurring concurrently with the live, dead, and test loads existing at the time of test.

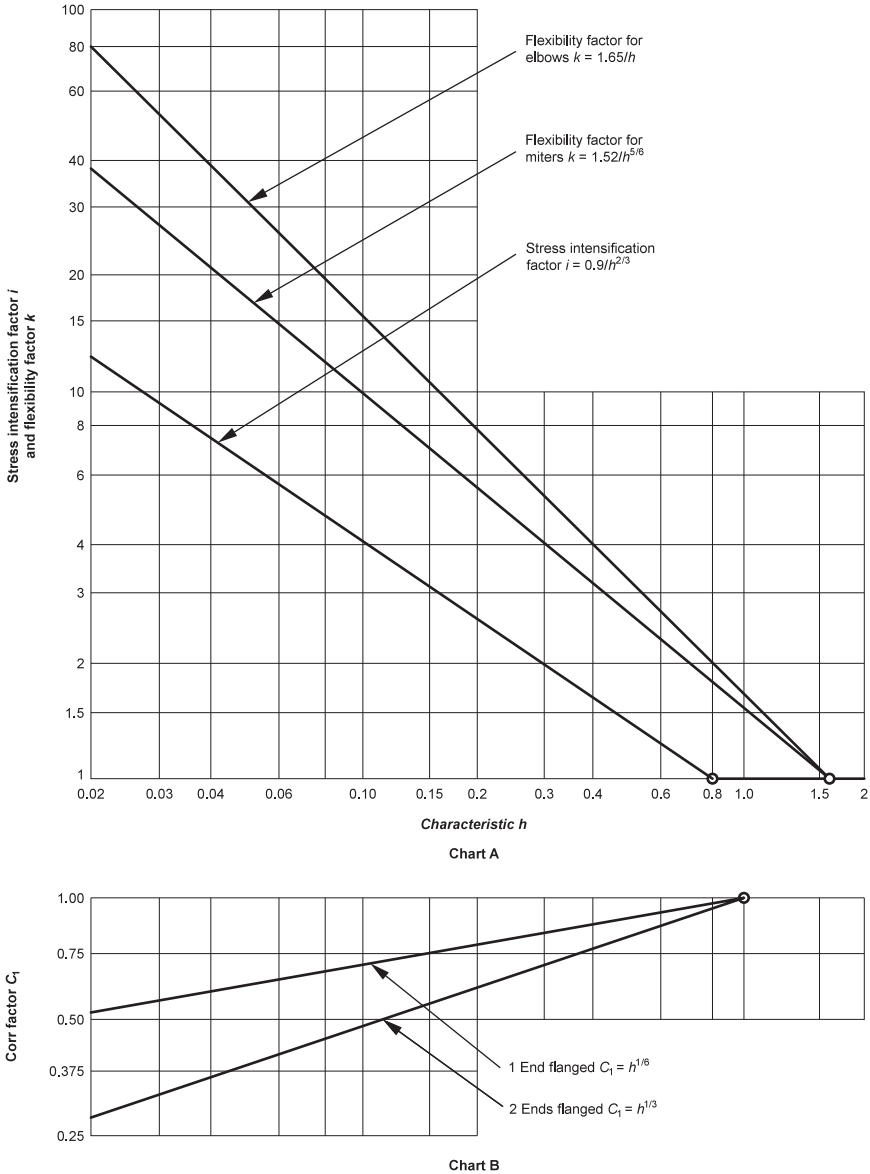

Figure 2.34 Continued.

2.4.2.7.3.4.1 Analysis The effect of restraints, such as support friction, branch connections, and lateral interferences, should be considered in the stress calculations.

Calculations should take into account stress intensification factors found to exist in components other than plain straight pipe. Credit may be taken for extra flexibility of

such components. In the absence of more directly applicable data, the flexibility factors and stress intensification factors shown in Figure 2.34 (B31.4 Figure 419.6.4(c)) may be used.

Nominal dimensions of pipe and fittings shall be used in flexibility calculations.

Calculations of pipe stress in loops, bends, and offsets should be considered.

Calculations of thermal forces and moments on anchors and equipment such as pumps, meters, and heat exchangers should be based on the difference between installation temperature and minimum or maximum anticipated operating temperature, whichever is greater.

2.4.3 Minimum cover for buried pipelines

The depth of a pipeline ditch should be appropriate for the route location, surface use of land, terrain features, and loads imposed by roadways and railroads. All buried pipelines should be installed below the normal level of cultivation and with a minimum cover not less than that shown in Table 2.29 (B31.4 Table 434.6(a)). Where the cover provisions of Table 2.29 cannot be met, pipe may be installed with less cover if additional protection is provided to withstand external loads and to minimize damage to the pipe by external forces.

Width and grade of ditch should provide for lowering of the pipe into the ditch to minimize damage to the coating and to facilitate fitting the pipe to the ditch.

Location of underground structures intersecting the ditch route should be determined in advance of construction activities to prevent damage to such structures. A minimum clearance of 12 in. (0.3 m) should be provided between the outside of any buried pipe or component and the extremity of any other underground structures, except for drainage tile that should have a minimum clearance of 2 in. (50 mm), and as permitted under Paragraph 461.1.1(c).

Table 2.29 ASME B31.4 Code Table 434.6(a). Minimum Cover For Buried Pipelines

Location	For normal excavation, in. (m) [Note (1)]	For rock Excavation requiring blasting or removal by equivalent means, in. (m)
Industrial, commercial, and residential areas	36 (0.9)	24 (0.6)
River and stream crossings	48 (1.2)	18 (0.45)
Drainage ditches at roadways and railroads	36 (0.9)	24 (0.6)
Any other area	30 (0.75)	18 (0.45)

Note: (1) Minimun cover for pipelines transporting carbon dioxide, LPG, or liquid anhydrous ammonia shall be 48 in. (1.2 m) for normal excavation in industrial, commercial, and residential areas, river and stream crossings, and drainage ditches at roadways and railroads; and 36 in. (0.9 m) for normal excavation in any other area.
(Courtesy of ASME)

Ditching operations should follow good pipeline practice and consideration of public safety. API RP 1102 provides additional guidance.

2.4.4 Testing

2.4.4.1 General

In order to meet the requirements of this code, it is essential that tests be made when a system or component parts are completed. Should a leak occur, the line section or component should be repaired or replaced and retested in accordance with this code.

2.4.4.2 Testing of fabricated items

Fabricated items such as pig traps, manifolds, and volume bottles should be hydrostatically tested to limits equal to or greater than those required of the completed system. When testing fabricated items before installation, the applicable paragraphs of specifications listed in Table 2.30 (B31.4 Table 423.1) apply.

Table 2.30 ASME B31.4 Code Table 423.1. Material Standards

Standard or specification	Designation
Pipe	
Pipe, steel, black and hot-dipped, zinc-coated welded & seamless	ASTM A 53
Seamless carbon steel pipe for high-temperature service	ASTM A 106
Pipe, steel, electric-fusion (arc)-welded (sites NPS 16 and over)	ASTM A 134
Electric-resistance-welded steel pipe	ASTM A 135
Electric-fusion (arc)-welded steel pipe (NPS 4 and over)	ASTM A 139
Seamless and welded steel pipe for low temperature service	ASTM A 333
Metal-arc-welded steel pipe for use with high-pressure transmission systems	ASTM A 381
Seamless carbon steel pipe for atmospheric and lower temperatures	ASTM A 524
General requirements for specialized carbon and alloy steel pipe	ASTM A 530
Electric-fusion-welded steel pipe for atmospheric and lower temperatures	ASTM A 671
Electric-fusion-welded steel pipe for high-pressure service at moderate temperatures	ASTM A 672
Line pipe	API 5 L
Fittings, Valves, and Flanges	
Pipe flanges and flanged fittings	ASME B16.5
Forgings, carbon steel, for piping components	ASTM A 105
Gray iron castings for valves, flanges, and pipe fittings	ASTM A 126
Forgings, carbon steel, for general-purpose piping	ASTM A 181

Continued

Table 2.30 Continued

Standard or specification	Designation
Forged or rolled alloy-steel pipe flanges, forged fittings, and valves and parts for high-temperature service	ASTM A 182
Steel castings, carbon, suitable for fusion welding, for high temperature service	ASTM A 216
Steel castings, martensitic stainless and alloy, for pressure containing parts, suitable for high-temperature service	ASTM A 217
Piping fittings of wrought carbon steel and alloy steel for moderate and elevated temperatures	ASTM A 234
Forgings, carbon and low-alloy steel, requiring notch toughness testing for piping components	ASTM A 350
Ferritic ductile iron pressure-retaining castings for use at elevated temperatures	ASTM A 395
piping fittings of wrought carbon steel and alloy steel for low temperature service [Note (1)]	ASTM A 420
Steel castings suitable for pressure service	ASTM A 487
Forgings, carbon and alloy steel, for pipe flanges, fittings, valves, and parts for high-pressure transmission service	ASTM A 694
Wellhead equipment	API 6A
Pipeline valves, end closures, connectors, and swivels	API 6D
Steel gate valves, flanged and butt-welding ends	API 600
Compact carbon steel gate valves	API 602
Class 150, corrosion resistant gate valves	API 603
Quality standard for steel castings for valves, flanges and fittings and other piping components	MSS SP-55
Specification for high test wrought welding fittings	MSS SP-75
Bolting	
Alloy-steel and stainless steel bolting materials for high-temperature service	ASTM A 193
Carbon and alloy steel nuts for bolts for high-pressure and high-temperature service	ASTM A 194
Carbon steel externally threaded standard fasteners	ASTM A 307
Alloy steel bolting materials for low-temperature service	ASTM A 320
High-strength bolts for structural steel joints	ASTM A 325
Quenched and tempered alloy steel bolts, studs, and other externally threaded fasteners	ASTM A 354
Quenched and tempered steel bolts and studs	ASTM A 449
Heat treated steel structural bolts, 150 ksi (1035 MPa) minimum tensile strength	ASTM A 490
Structural materials	
General requirements for rolled steel plates, shapes, sheet piling, and bars for structural use	ASTM A 6
General requirements for steel plates for pressure vessels	ASTM A 20

Continued

Table 2.30 Continued

Standard or specification	Designation
General requirements for steel bars, carbon and alloy, hot-wrought and cold-finished	ASTM A 29
Structural steel	ASTM A 36
Pressure vessel plates, alloy steel, manganese-vanadium	ASTM A 225
High-strength low-alloy structural steel	ASTM A 242
Low and intermediate tensile strength carbon steel plates, and bars	ASTM A 283
Pressure vessel plates, carbon steel, low- and intermediate-tensile strength	ASTM A 285
High-strength low-alloy structural manganese vanadium steel	ASTM A 441
Pressure vessel plates, carbon steel, improved transition properties	ASTM A 442
General requirements for steel sheet and strip, alloy, hot-rolled and cold-rolled	ASTM A 505
Steel sheet and strip, alloy, hot-rolled and cold-rolled, regular quality	ASTM A 506
Steel sheet and strip, alloy, hot-rolled and cold-rolled, drawing quality	ASTM A 507
High-yield-strength, quenched and tempered alloy steel plate, suitable for welding	ASTM A 514
Pressure vessel plates, carbon steel, for intermediate- and higher-temperature service	ASTM A 515
Pressure vessel plates, carbon steel, for moderate- and lower-temperature service	ASTM A 516
Pressure vessel plates, alloy steel, high-strength, quenched and tempered	ASTM A 517
Pressure vessel plates, heat treated, carbon-manganese-silicon steel	ASTM A 537
High-strength low-alloy columbium-vanadium steels of structural quality	ASTM A 572
Structural carbon steel plates of improved toughness	ASTM A 573
Steel bars, carbon, merchant quality, M-grades	ASTM A 575
Steel bars, carbon, hot-wrought, special quality	ASTM A 576
Normalized high-strength low-alloy structural steel	ASTM A 633
Steel bars, carbon, merchant quality, mechanical properties	ASTM A 663
Steel bars, carbon, hot-wrought, special quality, mechanical properties	ASTM A 675
Miscellaneous	
Pipe hangers and support materials, design and manufacture	MSS SP-58

General note: Specific editions of standards Incorporated in this Code by reference, and the names and addresses of the sponsoring organizations, are shown in Appendix A, since it is not practical to refer to a specific edition of each standard in Table 423.1 and throughout the Code text Appendix A will be revised at intervals as needed, and issued in Addenda to the Code.
Note: (1) A 420 Grade WPL9 is not recommended for anhydrous ammonia due to copper content.
(Courtesy of ASME)

2.4.4.3 Testing after new construction

2.4.4.3.1 Systems or parts of systems

All piping systems within the scope of this code, regardless of stress, should be tested after construction. Carbon dioxide systems should be hydrostatically tested:

(a) Systems operated at a hoop stress greater than 20% of the specified minimum yield strength of the pipe should be hydrostatically tested in accordance with Paragraph 437.4.1.

(b) Systems operated at hoop stress less than 20% of the specified minimum yield strength of the pipe may be leak-tested in accordance with Paragraph 437.4.3 in lieu of the hydrostatic test specified in Paragraph 437.4.1.

(c) When testing piping, in no case should the test pressure exceed that specified in the standards of material specifications (except pipe) incorporated in the code by reference and listed in Table 2.30 (B31.4 Table 423.1).

(d) Equipment not subjected to test pressure should be disconnected from the piping or otherwise isolated. Valves may be used if the valve, including closing mechanism, is suitable for the test pressure.

2.4.4.3.2 Testing tie-ins

Since it is sometimes necessary to divide a pipeline into test sections and install test heads, connecting piping, and other necessary appurtenances for testing or to install a pretested replacement section, it is not required that tie-in welds be tested; however, tie-in welds and girth welds joining lengths of pretested pipe should be inspected by radiographic or other accepted nondestructive methods in accordance with Paragraph 434.8.5(a)(4) if system is not pressure-tested after tie-in. After such inspection, the joint should be coated and inspected in accordance with Paragraph 461.1.2 before backfilling.

2.4.4.3.3 Testing controls and protective equipment

All controls and protective equipment, including pressure-limiting devices, regulators, controllers, relief valves, and other safety devices, should be tested to determine that they are in good mechanical condition; they are of adequate capacity, effectiveness, and reliability of operation for the service in which they are employed; they are functioning at the correct pressure; and they are properly installed and protected from foreign materials or other conditions that might prevent proper operations.

2.4.4.4 Test pressure

2.4.4.4.1 Hydrostatic testing on internal pressure piping

Portions of piping systems to be operated at a hoop stress more than 20% of the specified minimum yield strength of the pipe should be subjected at any point to a hydrostatic proof test equivalent to not less than 1.25 times the internal design pressure at that point (see Paragraph 401.2.2) for not less than 4 h. When lines are tested at pressures that develop a hoop stress, based on nominal wall thickness, in excess of 90% of

the specified minimum yield strength of the pipe, special care should be used to prevent overstrain of the pipe:

- Those portions of piping systems where all of the pressurized components are visually inspected during the proof test to determine that there is no leakage require no further test. This can include lengths of pipe that are pretested for use as replacement sections.
- On those portions of piping systems not visually inspected while under test, the proof test should be followed by a reduced pressure leak test equivalent to not less than 1.1 times the internal design pressure for not less than 4 h.

API RP 1110 may be used for guidance for the hydrostatic test.

The hydrostatic test should be conducted with water, except liquid petroleum that does not vaporize rapidly may be used provided

- the pipeline section under test is not offshore and is outside of cities and other populated areas, and each building within 300 ft. (90 m) of the test section is unoccupied while the test pressure is equal to or greater than a pressure that produces a hoop stress of 50% of the specific minimum yield strength of the pipe;
- the test section is kept under surveillance by regular patrols during test; and
- communication is maintained along the test section.

If the testing medium in the system will be subject to thermal expansion during the test, provisions should be made for relief of excess pressure. Effects of temperature changes should be taken into consideration when interpretations are made of recorded test pressure.

After completion of the hydrostatic test, it is important in cold weather that the lines, valves, and fittings be drained completely of any water to avoid damage due to freezing.

Carbon dioxide pipelines, valves, and fittings should be dewatered and dried prior to placing in service to prevent the possibility of forming a corrosive compound from carbon dioxide and water.

2.4.4.4.2 Leak testing

A 1 h hydrostatic or pneumatic leak test may be used for piping systems to be operated at a hoop stress of 20% or less of the specified minimum yield strength of the pipe. The hydrostatic test pressure should not be less than 1.25 times the internal design pressure. The pneumatic test gauge pressure should be 100 psi (7 bar) or that pressure that would produce a nominal hoop stress of 25% of the specified minimum yield strength of the pipe, whichever is less.

2.4.5 Offshore liquid pipeline systems (B31.4 Code Chapter IX)

2.4.5.1 General considerations

Chapter IX pertains only to offshore pipeline systems as defined in Paragraph A400.1.

The chapter is organized to parallel the numbering and content of the first eight chapters of the code. Paragraph designations are the same as those in the first eight chapters, with the prefix "A."

All provisions of the first eight chapters of the code are also requirements of this chapter unless specifically modified herein. If the text in this chapter adds

requirements, the requirements in the original chapter with the same title and number also apply. If a provision in this chapter is in conflict with one or more provisions in other chapters, the provisions in this chapter govern.

It is the intent of this chapter to provide requirements for the safe and reliable design, installation, and operation of offshore liquid pipeline systems. It is not the intent of this chapter to be all inclusive. Engineering judgment must be used to identify special considerations that are not specifically addressed. API RP 1111 may be used as a guide. It is not the intent of this chapter to prevent the development and application of new equipment and technology. Such activity is encouraged as long as the safety and reliability requirements of the code are satisfied.

2.4.5.2 Offshore design conditions

The design of an offshore pipeline system is often controlled by installation considerations rather than by operating load considerations. Some of the conditions that may influence the safety and reliability of the offshore pipeline system include the following:

- Pressure
- Temperature
- Wind
- Wave
- Current
- Seabed
- Ice
- Seismic activity
- Platform motion
- Water depth
- Support settlement
- Accidental loads
- Marine vessel activity
- Fishing/recreational activities

2.4.5.3 Allowable stresses and other stress limits

The allowable stresses and other stress limits given in Paragraph 402.3 are superseded by the provisions of Paragraphs A402.3.4 and A402.3.5. Design and installation analyses should be based upon accepted engineering methods, material strengths, and applicable design conditions.

2.4.5.4 Strength criteria during installation and testing (Paragraph A402.3.4)

2.4.5.4.1 Allowable stress values

The maximum longitudinal stress due to axial and bending loads during installation should be limited to a value that prevents pipe buckling and that will not impair the serviceability of the installed pipeline system. Other stresses resulting from pipeline

installation activities, such as spans, should be limited to the same criteria. Instead of a stress criterion, an allowable installation strain limit may be used.

2.4.5.4.2 Design against buckling

The offshore pipeline system should be designed and installed in a manner of preventing local buckling of the pipe wall, collapse, and column buckling during installation. Design and installation procedures should consider the effect of external hydrostatic pressure; bending, axial, and torsional loads; impact; mill tolerances in the wall thickness; out of roundness; and other applicable factors. Consideration should also be given to the mitigation of propagation buckling, which may follow local buckling or denting. The pipe wall thickness should be selected to resist collapse due to external hydrostatic pressure.

2.4.5.4.3 Design against fatigue

The pipeline should be designed and installed to limit anticipated stress fluctuations to magnitudes and frequencies that will not impair the serviceability of the installed pipeline. Loads that may cause fatigue include wave action and vibrations induced by vortex shedding. Pipelines and riser spans should be designed to prevent vortex-induced resonant vibrations, when practical. When vibrations must be tolerated, the resulting stresses due to vibration should be considered. If alternative acceptance standards for girth welds in API Standard 1104 are used, the cyclic stress analysis should include the determination of a predicted fatigue spectrum to which the pipeline is exposed over its design life.

2.4.5.4.4 Design against fracture

The prevention of fractures during installation should be considered in material selection in accordance with the requirements of Paragraph A423.2. Welding procedures and weld defect acceptance criteria should consider the need to prevent fractures during installation (see Paragraphs 434.8.5 and A434.8.5).

2.4.5.4.5 Design against loss of in-place stability

Design against loss of in-place stability should be in accordance with the provisions of Paragraph A402.3.5(e), except that the installation design wave and current conditions should be based upon the provisions of Paragraph A401.9.3. If the pipeline is to be trenched, it should be designed for stability during the period prior trenching.

2.4.5.4.5.1 Impact During the period when the pipe is susceptible to impact damage during installation and testing, consideration should be given to impacts due to the following:

- Anchors
- Trawl boards
- Vessels
- Ice keels
- Other foreign objects

2.4.5.4.5.2 Residual stresses The pipeline system should normally be installed in a manner so as to minimize residual stresses. The exception will be when the designer purposefully plans for residual stresses (e.g., reeled pipe, cold springing of risers, and pull-tube risers).

2.4.5.5 Flexible pipe

The manufacturer's recommended installation procedures should be adhered to during installation. Flexible pipe should be designed or selected to prevent failure due to the combined effects of external pressure, internal pressure, torsional forces, axial forces, and bending (see API RP 17B).

2.5 ASME B31.8 gas transmission and distribution piping systems

2.5.1 Scope

ASME B31.8 covers the design, fabrication, installation, inspection, and testing of gas transmission and distribution piping systems, including gas pipelines, gas compressor stations, gas metering and regulation stations, gas mains, and service lines up to the outlet of the customer's meter set assembly. It includes gas transmission and gathering pipelines, including appurtenances that are installed offshore for the purpose of transporting gas from production facilities to onshore locations; gas storage equipment of the closed pipe type that is fabricated or forged from pipe or fabricated from pipe and fittings; and gas storage lines. This code also covers safety aspects of the operation and maintenance of the aforementioned facilities. The code DOES NOT apply to the following:

(a) Design and manufacture of pressure vessels covered by the ASME BPVC
(b) Piping with metal temperatures above 450 °F (232 °C) or below −20 °F (30 °C) (For low temperature within the range covered by this code, see Paragraph 812.)
(c) Piping beyond the outlet of the customer's meter assembly (refer to ASME Z223.1 and NFPA 54)
(d) Piping in oil refineries or natural gasoline extraction plants, gas treating plant piping other than the main gas stream piping in dehydration, and all other processing plants installed as part of a gas transmission system, gas manufacturing plants, industrial plants, or mines
(e) Vent piping to operate at substantially atmospheric pressures for waste gases of any kind
(f) Wellhead assemblies, including control valves, flow lines between wellhead and trap or separator, offshore platform production facility piping, or casing and tubing in gas or oil wells (For offshore platform facility piping, refer to API RP 14E.)
(g) The design and manufacturer of propriety items of equipment, apparatus, or instruments
(h) The design and manufacturer of heat exchangers (refer to Tubular Exchanger Manufacturers Association (TEMA) standard)
(i) Liquid petroleum transportation piping systems (refer to ASME B31.4)
(j) Liquid slurry transportation piping systems (refer to ASME B31.11)
(k) Carbon dioxide transportation piping systems (refer to ASME B31.4)
(l) Liquefied natural gas piping systems (refer to NFPA 59A and ASME B31.3)

Key changes in the 2012 revision include adding a new section on training and qualification of operating company personnel and a new section on developing a damage prevention program. In addition, the plastic piping design formula section was revised in its entirety.

B31.8 Code prescribes comprehensive solutions for materials, design, fabrication, assembly, erection, testing, and inspection.

2.5.2 Design, installation, and testing

2.5.2.1 General considerations

The design requirements of this code are intended to be adequate for public safety under ALL conditions encountered in the gas industry. Conditions that may cause additional stress in any part of a line or its appurtenances should be provided for, using good engineering practice. Examples of such conditions include long self-supported spans, unstable ground, mechanical or sonic vibration, weight of special attachments, earthquake-induced stresses, stresses caused by temperature differences, and the soil and temperature conditions found in the Arctic. Temperature differences should be taken as the difference between the lowest and highest expected metal temperatures during pressure test and/or operating services having due regard to past recorded temperature data and the possible effects of lower or higher air and ground temperature.

The most significant factor contributing to the failure of a gas pipeline is damage to the line caused by the activities of people along the route of the line. Damage will generally occur during construction of other facilities associated with providing the services associated with human dwellings and commercial or industrial enterprises. These services, such as water, gas and electric supply, sewage systems, drainage lines and ditches, buried power and communication cables, and streets and roads, become more prevalent and extensive, and the possibility of damage to the pipeline becomes greater with larger concentrations of buildings intended for human occupancy. Determining the location class provides a method of assessing the degree of exposure of the line to damage.

A pipeline designed, constructed, and operated in accordance with the requirements of Location Class 1 (refer to Paragraph 840.2(b)(1)) is basically safe for pressure containment in any location; however, additional measures are necessary to protect the integrity of the line in the presence of activities that might cause damage. One of the measures required by this code is to lower the stress level in relation to increased public activity. This activity is quantified by determining the location class and relating the design of the pipeline to the appropriate design factor.

Location class determines the design, installation, construction, testing, and operation requirements.

2.5.3 Buildings intended for human occupancy

2.5.3.1 General

Early editions of this code used the term “population density index” to describe design, construction, testing, and operation requirements. They also used the term “location class” in prescribing design pressure, type of construction, and maximum allowable operating pressure. To simplify the use of this code, the term “population density

index" was eliminated. Construction types A, B, C, and D were eliminated and replaced with the same terminology used for design location class.

Pipelines constructed prior to the publication of the current edition of this code and designed in accordance with location classes established in compliance with previous editions of this code may continue to use the location classes so determined, provided that when observed increases in the number of buildings intended for human occupancy occur, the location class determination shall be as presented in §840.2.

To determine the number of buildings intended for human occupancy for an onshore pipeline, one should lay out a zone ¼-mile wide along the route of the pipeline with the pipeline on the centerline of this zone and divide the pipeline into random sections 1 mile in length such that the individual lengths will include the maximum number of buildings intended for human occupancy. Count the number of buildings intended for human occupancy within each 1-mile (1.6 km) zone. For this purpose, each separate dwelling unit in a multiple-dwelling unit building is to be counted as a separate building intended for human occupancy.

When a cluster of buildings intended for human occupancy indicates that a basic 1-mile (1.6 km) pipeline should be identified as a Location Class 2 or Location Class 3, the Location Class 2 or Location Class 3 may be terminated 660 yards (600 m) from the nearest building in the cluster. For pipelines shorter than 1-mile (1.6 km) in length, a location class should be assigned that is typical of the location class that would be required for 1 mile (1.6 km) of pipeline traversing the area.

Table 2.31 shows in general terms the location class and design factor, F, to use in different instances. A more specific description of locations for use of the different factors can be found in the ASME B31.8 Code. To determine the location class, it is necessary to first define a location class the area in question. ASME B31.8 applies to gathering lines offshore and onshore, unless within a city or subdivision. For pipelines located within a city or subdivision, local city, county, or state codes apply. The ASME B31.8 Code defines location class in terms of a "1-mile section."

2.5.3.2 Mile section

A 1-mile (1.6 km) section is determined by laying out a zone one-mile long and 1/4 mile (200 m) wide along the route of the pipeline with the pipeline on the centerline of the zone. The number of dwellings intended for human occupancy in this zone is counted. Each separate dwelling unit in a multiple-dwelling unit building is counted as a separate building intended for human occupancy.

2.5.3.3 Location classes for design and construction

There are five classes of locations for ASME B31.8:

2.5.3.3.1 Location Class 1

A Location Class 1 is any 1-mile (1.6 km) section of pipeline that has 10 or fewer buildings intended for human occupancy. This includes areas such as wastelands, deserts, rugged mountains, grazing land, farmland, and sparsely populated areas.

Table 2.31 Design factors for steel pipe construction

	Location Class				
	1				
Facility	**Div. 1**	**Div. 2**	**2**	**3**	**4**
Pipelines, mains, and service lines [see Paragraph 841.2.1(b)]	0.80	0.72	0.60	0.50	0.40
Crossings of roads, railroads without casing;					
(a) Private roads	0.80	0.72	0.60	0.50	0.40
(b) Unimproved public roads	0.60	0.60	0.60	0.50	0.40
(c) Roads, highways, or public streets, with hard surface and railroads	0.60	0.60	0.50	0.50	0.40
Crossings of roads, railroads with casing:					
(a) Private roads	0.80	0.72	0.60	0.50	0.40
(b) Unimproved public roads	0.72	0.72	0.60	0.50	0.40
(c) Roads, highways, or public streets, with hard surface and railroads	0.72	0.72	0.60	0.50	0.40
Parallel encroachment of pipelines and mains on roads and railroads:					
(a) Private roads	0.80	0.72	0.60	0.50	0.40
(b) Unimproved public roads	0.80	0.72	0.60	0.50	0.40
(c) Roads, highways, or public streets, with hard surface and railroads	0.60	0.60	0.60	0.50	0.40
Fabricated assemblies [see Paragraph 841.1.9(a)]	0.60	0.60	0.60	0.50	0.40
Pipelines on bridges [see Paragraph 841.1.9(b)]	0.60	0.60	0.60	0.50	0.40
Pressure/flow control and metering facilities [see Paragraph 841.1.9(c)]	0.50	0.50	0.50	0.50	0.40
Compressor station piping	0.50	0.50	0.50	0.50	0.40
Near concentration of people in location Classes 1 and 2 [see Paragraph 840.3(b)]	0.50	0.50	0.50	0.50	0.40

(Courtesy of ASME B31.8)

2.5.3.3.1.1 Location Class: Division 1 This is a Location Class 1 location where the design factor, "*F*," of the pipe is greater than 0.72 but equal to or less than 0.80 and that has been hydrostatically tested to 1.25 times MOP (see Table 2.31 for exceptions to design factor). The design factor "*F*" of 0.80 is based on actual gas pipeline operational experience at operation levels in excess of those previously recommended by ASME B31.8 Code.

2.5.3.3.1.2 Location Class 1: Division 2 This is a Location Class 1 where the design factor, "*F*," of the pipe is equal to or less than 0.72 and that has been tested to 1.1 times the MOP.

2.5.3.3.2 Location Class 2

A Location Class 2 is any 1-mile (1.6 km) section that has more than 10 but less than 46 buildings intended for human occupancy. This includes fringe areas around cities and towns, industrial areas, ranch, or country estates.

2.5.3.3.3 Location Class 3

This is any 1-mile (1.6 km) section that has 46 or more buildings intended for human occupancy. This includes suburban housing developments, shopping centers, residential areas, industrial areas, and other populated areas not meeting Location Class 4 requirements.

2.5.3.3.4 Location Class 4

This is any 1-mile (1.6 km) section of pipeline where multistory buildings are prevalent and traffic is heavy or dense and where there may be numerous other utilities underground. Multistory means four or more floors aboveground including the first, or ground, floor. The depth of basements or number of basement floors is immaterial.

In addition to the criteria previously presented, additional consideration must be given to the possible consequences of a failure near a concentration of people, such as that found in a church, school, multiple-dwelling unit, hospital, or residential area of an organized character in a Location Class 1 or 2. If the facility is used infrequently, the requirements of the following paragraph need not be applied.

Pipelines near places of public assembly or concentrations of people such as churches, schools, multiple-dwelling unit buildings, hospitals, or recreational areas of an organized nature in Location Classes 1 and 2 should meet the requirements for Location Class 3.

The concentration of people previously referred to is not intended to include groups fewer than 20 people per instance or location but is intended to cover people in an outside area and in a building.

It should be emphasized that location class (1, 2, 3, or 4), as previously described, is the general description of a geographic area having certain characteristics as a basis for prescribing the types of design, construction, and methods of testing to be used in those locations or in areas that are, respectively, comparable. A numbered location class, such as Location Class 1, refers only to the geography of that location or a similar area and does not necessarily indicate that a design factor of 0.72 will suffice for all constructions in that particular location or area (e.g., in Location Class 1, all crossings without casings require a design factor of 0.60).

When classifying locations for the purpose of determining the design factor, "*F*," for the pipeline construction and testing that should be prescribed, due consideration should be given to the possibility of future development of the area. If at the time of planning a new pipeline of this future development appears likely to be sufficient to change the class location, this should be taken into consideration in the design and testing of the proposed pipeline.

2.5.4 Design pressure

The nominal wall thickness of straight sections of steel pipe should be equal to or greater than t_n and is determined from the following equation:

$$t = \frac{Pd_o}{2(FETS)} \tag{2.34}$$

where

t_n = required nominal wall thickness to be specified when ordering pipe, in. (mm)
P = internal design pipe pressure, psig (kPa)
d_o = pipe outside diameter, in. (mm)
S = minimum yield strength of pipe, psi (kPa) (Table 2.32)
F = design factor (Table 2.33) (see discussion that follows)
E = longitudinal joint factor (Table 2.34)
= 1.00 for seamless, ERW, and flash weld
= 0.80 for furnace lap and electric fusion welded pipe
=0.60 for furnace butt welded pipe
T = temperature derating factor, dimensionless (Table 2.35)

2.5.5 Fittings other than valves and flanges

The minimum metal thickness of flanged or threaded fittings shall not be less than specified for the pressure and temperatures in the applicable ASME standards or the MSS Standard Practice.

2.5.6 Branch connections

Welded branch connections on steel pipe must meet the design requirements of §831.4 and §831.5. When branch connections are made to pipe in the form of a single connection or in a header or manifold as a series of connections, the design must be adequate to control the stress levels in the pipe within safe limits. The construction shall accommodate the stresses in the remaining pipe wall due to the opening in the pipe or header, the shear stresses produced by the pressure acting on the area of the opening, and any external loadings due to thermal movement, weight, vibration, etc.

2.5.7 Reinforcement of multiple openings

Where two or more adjacent branches are spaced at less than two times their average diameter (so that their effective area of reinforcement overlap), the group of openings shall be reinforced in accordance with §831.4. The reinforcing metal shall be added as a combined reinforcement, the strength of which shall equal the combined strengths of the reinforcements that would be required for the separate openings. In no case shall any portion of a cross section be considered to apply to more than one opening or be evaluated more than once in a combined area.

Table 2.32 Specified minimum yield strength for steel pipe commonly used in piping systems

Spec no.	Grade	Type [Note (1)]	SMYS, psi	(MPa)
API 5 L [Note (2)]	A25	BW, ERW, S	25,000	(172)
API 5 L [Note (2)]	A	ERW, S, DSA	30,000	(207)
API 5 L [Note (2)]	B	ERW, S, DSA	35,000	(241)
API 5 L [Note (2)]	×42	ERW, S, DSA	42,000	(290)
API 5 L [Note (2)]	×46	ERW, S, DSA	46,000	(317)
API 5 L [Note (2)]	×52	ERW, S, DSA	52,000	(359)
API 5 L [Note (2)]	×56	ERW, S, DSA	56,000	(386)
API 5 L [Note (2)]	×60	ERW, S, DSA	60.000	(414)
API 5 L [Note (2)]	×65	ERW, S, DSA	65,000	(448)
API 5 L [Note (2)]	×70	ERW, S, DSA	70,000	(483)
API 5 L [Note (2)]	×80	ERW, S, DSA	80,000	(552)
ASTM A 53	Type F	BW	25,000	(172)
ASTM A 53	A	ERW, S	30,000	(207)
ASTM A 53	B	ERW, S	35.000	(241)
ASTM A 106	A	S	30,000	(207)
ASTM A 106	B	S	35,000	(241)
ASTM A 106	C	S	40,000	(276)
ASTM A 134	-	EFW	[Note (3)]	
ASTM A 135	A	ERW	30,000	(207)
ASTM A 135	B	ERW	35,000	(241)
ASTM A 139	A	EFW	30,000	(207)
ASTM A 139	B	EFW	35,000	(241)
ASTM A 139	C	EFW	42,000	(290)
ASTM A 139	D	EFW	46,000	(317)
ASTM A 139	E	EFW	52,000	(359)
ASTM A 333	1	S, ERW	30,000	(207)
ASTM A 333	3	S, ERW	35,000	(241)
ASTM A 333	4	S	35,000	(241)
ASTM A 333	6	S, ERW	35,000	(241)
ASTM A 333	7	S, ERW	35,000	(241)
ASTM A 333	8	S, ERW	75,000	(517)
ASTM A 333	9	S, ERW	46,000	(317)
ASTM A 381	Class Y-35	DSA	35,000	(241)
ASTM A 381	Class Y-42	DSA	42,000	(291)
ASTM A 381	Class Y-46	DSA	46,000	(317)
ASTM A 381	Class Y-48	DSA	48,000	(331)
ASTM A 381	Class Y-50	DSA	50,000	(345)
ASTM A 381	Class Y-52	DSA	52,000	(359)
ASTM A 381	Class Y-56	DSA	56,000	(386)
ASTM A 381	Class Y-60	DSA	60,000	(414)
ASTM A 381	Class Y-65	DSA	65,000	(448)
ASTM A 984	35	ERW	35,000	(241)
ASTM A 984	50	ERW	50,000	(345)
ASTM A 984	60	ERW	60,000	(414)
ASTM A 984	70	ERW	70,000	(483)
ASTM A 984	80	ERW	80,000	(552)
ASTM A 1005	35	DSA	35,000	(241)

Continued

Table 2.32 Continued

Spec no.	Grade	Type [Note (1)]	SMYS, psi	(MPa)
ASTM A 1005	50	DSA	50,000	(345)
ASTM A 1005	60	DSA	60,000	(414)
ASTM A 1005	70	DSA	70,000	(483)
ASTM A 1005	80	DSA	80,000	(552)
ASTM A 1006	35	LW	35,000	(241)
ASTM A 1006	50	LW	50,000	(345)
ASTM A 1006	60	LW	60,000	(414)
ASTM A 1006	70	LW	70,000	(483)
ASTM A 1006	80	LW	80,000	(552)

General note: This table is not complete. For the minimum specified yield strength of other grades and grades in other approved specifications, refer to the particular specification.
Notes: (1) BW = furnace butt-welded; DSA = double submerged-arc welded; EFW = electric fusion welded; ERW = electric resistance welded; FW = flash welded; S = seamless; LW = laser welded. (2) Intermediate grades are available in API 5 L. (3) See applicable plate specification for SMYS.
Long-Term Hydrostatic Strength Values for Thermoplastic Pipes Covered by ASTM D 2513. The values apply only to materials and pipes meeting all the requirements of the basic materials and ASTM D 2513. They are based on engineering test data obtained in accordance with ASTM D 1599 and analyzed in accordance with ASTM D 2837. A list of commercial compounds meeting these requirement is published yearly by the Plastics Pipe Institute.

	Long-term hydrostatic strength at 73 °F (23 °C)	
Plastic pipe material designation (D 2513)	psi	(MPa)
PB 211C	2000	(13.8)
PE 2406	1250	(8.6)
PE 3408	1600	(11.0)
PVC 1120	4000	(27.6)
PVC1220	4000	(27.6)
PVC 2110	2000	(13.8)
PVC 2116	3150	(21.7)

Long-Term Hydrostatic Strength for Reinforced Thermosetting Pipes Covered by ASTM D 2517 is 11,000 psi (75.8 MPa). The values apply only to materials and pipes meeting all the requirements of the basic materials and ASTM D 2517. They are based on engineering test data obtained in accordance with ASTM D 1599 and analyzed in accordance with ASTM D 2837.
(Courtesy of ASME B31.8).

Table 2.33 Basic design factor, "*F*"

Location Class	Design factor, *F*
Location Class 1, Division 1	0.80
Location Class 1, Division 2	0.72
Location Class 2	0.60
Location Class 3	0.50
Location Class 4	0.40

(Courtesy of ASME B31.8)

Table 2.34 Longitudinal joint factor, "*E*"

Spec. No.	Pipe class	*E* Factor
ASTM A 53	Seamless	1.00
	Electric-resistance-welded	1.00
	Furnace-butt Welded, continuous weld	0.60
ASTM A 106	Seamless	1.00
ASTM A 134	Electric-fusion arc-welded	0.80
ASTM A 135	Electric-resistance-welded	1.00
ASTM A 139	Electric-fusion arc-welded	0.80
ASTM A 333	Seamless	1.00
	Electric-resistance-welded	1.00
ASTM A 381	Submerged-arc-welded	1.00
ASTM A 671	Electric-fusion-welded	
	Classes 13, 23, 33,43, 53	0.80
	Gasses 12, 22, 32, 42, 52	1.00
ASTM A 672	Electric-fusion-welded	
	Classes 13, 23, 33, 43, 53	0.80
	Gasses 12, 22, 32, 42, 52	1.00
ASTM A 691	Electric-fusion-welded	
	Classes 13, 23, 33, 43, 53	0.80
	Gasses 12, 22, 32, 42, 52	1.00
ASTM A 984	Electric-resistance-welded	1.00
ASTM A 1005	Double submerged-arc-welded	1.00
ASTM A 1006	Laser beam welded	1.00
API 5 L	Electric welded	1.00
	Seamless	1.00
	Submerged-arc welded (longitudinal seam or helical seam)	1.00
	Furnace-butt welded, continuous weld	0.60

General note: Definitions for the various classes of welded pipe are given in Paragraph 804.7.3.
(Courtesy of ASME B31.8)

Table 2.35 Temperature derating factor, "*T*," for steel pipe

Temperature, °F (°C)	Temperature derating factor, *T*
250 (121) or less	1.000
300 (149)	0.967
350 (177)	0.933
400 (204)	0.900
450 (232)	0.867

(Courtesy of ASME B31.8)

When the distance between centers of two adjacent openings is less than 1-1/3 times their average diameter, as considered under §831.5(b), no credit for reinforcement shall be given for any of the metal between these two openings. Any number of closely spaced adjacent openings in any arrangement may be reinforced as if the group were treated as one assumed opening of a diameter enclosing all such openings.

2.5.8 Expansion and flexibility

2.5.8.1 General

The thermal expansion and contraction of the more common and low-alloy steels may be calculated using 6.5×10^{-6} in./in./°F (1.17×10^{-5} cm/cm/°C) as the coefficient of thermal expansion. The expansion or contraction to be considered is the difference between the maximum and minimum design temperatures and the expected average installation temperature. Table 2.36 (ASME B31.8 §832.2.1) lists the approximate amounts of expansion or contraction per unit length for selected temperatures.

2.5.8.2 Flexibility requirements

Piping systems shall be designed to have sufficient flexibility to prevent thermal expansion or contraction from causing excessive stresses in the piping material, excessive bending or unusual loads at joints, or undesirable forces or moments at points of

Table 2.36 Thermal expansion or contraction of piping materials

Temperature, °F (°C)	Approximate expansion or contraction, in./100 ft (mm/m) above or below 32 °F (0 °C)
−125 (−87)	1.2 (1.0)
−100 (−74)	1.0 (0.8)
−75 (−60)	0.8 (0.7)
−50 (−45)	0.6 (0.5)
0 (−18)	0.2 (0.2)
32 (0)	0.0 (0.0)
60 (16)	0.2 (0.2)
100 (38)	0.5 (0.4)
125 (52)	0.7 (0.6)
150 (66)	0.9 (0.8)
175 (79)	1.1 (0.9)
200 (93)	1.3 (1.1)
225 (107)	1.5 (1.3)
250 (121)	1.7 (1.4)
300 (149)	2.2 (1.8)
350 (177)	2.6 (2.2)
400 (204)	3.0 (2.5)
450 (232)	3.5 (2.9)

(Courtesy of ASME B31.8)

connection to equipment or at anchorage or guide points. Formal calculations shall be performed where reasonable doubt exists as to the adequate flexibility of the system. Guidance is provided in §833.7.

Flexibility shall be provided by the use of bends, loops, or offsets, or provision shall be made to absorb thermal changes by the use of expansion joints of the bellows type.

Properties of pipe and fittings for these calculations shall be based on nominal dimensions, and the joint factor, "*E*," shall be taken as 1.00. Flexibility calculations shall be based on the modulus of elasticity corresponding to the lowest temperature of the operational cycle.

In order to modify the effect of expansion and contraction, runs of pipe may be cold-sprung. "Cold spring" may be taken into account in the calculations of the reactions, provided an effective method of obtaining the designed "cold spring" is specified and used (refer to Chapter 10 for a discussion on cold spring).

2.5.8.3 Reactions

Reaction forces and moments used in the design of restraints and supports for a piping system, and in evaluating the effects of piping displacements on connected equipment, shall consider the full range of thermal displacement conditions plus weight and external loads. A cold spring may be useful to maintain reactions within acceptable limits.

The modulus of elasticity for carbon and low-alloy steel at various temperatures is given in Table 2.37 (B31.8 Table 832.5.1).

2.5.9 Design for longitudinal stress

2.5.9.1 Restraint

The restraint condition is a factor in the structural behavior of the pipeline. The degree of restraint may be affected by aspects of pipeline construction, support design, soil properties, and terrain. ASME B31.8 §833 is applicable to all steel piping within the scope of B31.8. For purposes of design, this code recognizes two axial restraint conditions, "restrained" and "unrestrained."

Table 2.37 Modulus of elasticity for carbon and low-alloy steel

Temperature, °F (°C)	Modulus of elasticity, psi × 10^6 (GPa)
−100 (−73)	30.2 (208)
70 (21)	29.5 (203)
200 (93)	28.8 (198)
300 (149)	28.3 (195)
400 (204)	27.7 (191)
500 (260)	27.3 (188)

Piping where soil or supports prevent axial displacement or flexure at bends is "restrained." Examples of restrained piping include the following:

- Straight sections of buried piping
- Bends and adjacent piping buried in stiff or consolidated soil
- Sections of aboveground piping on rigid supports

Piping that is free to displace axially or flex at bends is "unrestrained." Unrestrained piping may include the following:

- Aboveground piping that is configured to accommodate thermal expansion or anchor movements through flexibility
- Bends and adjacent piping buried in soft or unconsolidated soil
- An unbackfilled section or otherwise buried pipeline that is sufficiently flexible to displace laterally or that contains a bend
- Pipe subject to an end cap pressure force

2.5.9.2 Calculation of longitudinal stress components

The longitudinal stress due to internal pressure in restrained pipeline is

$$S_P = 0.3S_H \tag{2.35}$$

where S_H is the hop stress, psi (MPa).

The longitudinal stress due to internal pressure in unrestrained pipeline is

$$S_P = 0.5S_H \tag{2.36}$$

where S_H is the hoop stress, psi (MPa).

The longitudinal stress due to thermal expansion in restrained pipe is

$$S_T = E\sigma(T_1 - T_2) \tag{2.37}$$

where

E = the elastic modulus, psi (MPa), at the ambient temperature
T_1 = the pipe temperature at the time of installation, tie-in, or burial, °F (°C)
T_2 = the warmest or coldest pipe operating temperature, °F (°C)
σ = the coefficient of thermal expansion, 1/°F (1/°C)

If a section of pipe can operate either warmer or colder than the installed temperature, both conditions for T_2 may need to be examined.

The nominal bending stress in straight pipe or large-radius bends due to weight or other external loads is

$$S_B = M/Z \tag{2.38}$$

where

M = the bending moment across the pipe cross section, lb-in. (Nm)
Z = the pipe section modulus, in.^{3} (cm^3)

The nominal bending stress in fittings and components due to weight or other external loads is

$$S_B = M_R/Z \tag{2.39}$$

where M_R is the resultant intensified moment across the fitting or component. The resultant moment shall be calculated as

$$M_R = \left[(0.75 i_i M_i)^2 + (0.75 i_o M_o)^2 + M^2\right\}^{1/2}, \text{lb} - \text{in.(Nm)} \tag{2.40}$$

where

i_i = in-place stress intensification factor from Mandatory Appendix E
i_o = out-of-plane stress intensification factor from Mandatory Appendix E
M_i = in-place bending moment, lb-in. (Nm)
M_o = out-of-plane bending moment, lb-in. (Nm)
The product $0.75_i \geq 1.0$.

The stress due to axial loading other than thermal expansion and pressure is

$$S_X = R/A \tag{2.41}$$

where

A = pipe metal cross-sectional area, in.^{2} (mm^2)
R = external force axial component, lb (N)

The net longitudinal stresses in restrained pipe are

$$S_L = S_P + S_T + S_X + S_B \tag{2.42}$$

Note that S_B, S_L, S_T, or S_X can have negative values.

2.5.9.3 Combined stress for restrained pipe

The maximum permitted value of $|S_L|$ is $0.9ST$, where S is the specified minimum yield strength, psi (MPa), per Table 2.32 (§841.1.1(a)), and T is the temperature derating factor per Table 2.35 (§841.1.1.8).

The combined biaxial stress state of the pipeline in the operating mode is evaluated using the calculation in either (1) or (2):

(1) $|S_H - S_i|$
(2) $|S_L - S_L S_H + S_H^2|^{1/2}$

The maximum permitted value for the combined biaxial is kST where S is the specified minimum yield strength, psi (MPa), Table 2.32 (§841.1.1(a)); T is the temperature derating factor per Table 2.35 (§841.1.8); and k is defined as follows:

- For loads of long duration, the value of "k" shall not exceed 0.90.
- For occasional nonperiodic loads or short duration, the value of "k" shall not exceed 1.0.

2.5.9.4 Design for stress greater than yield

The limits for S_H and S_L may be exceeded where due consideration is given to the ductility and strain capacity of seam weld, girth weld, and pipe body materials and to the avoidance of buckles, swelling, or coating damage. The maximum permitted strain is limited to 2%.

2.5.9.5 Summation of longitudinal stresses in unrestrained pipe

The net longitudinal stress in unrestrained pipe is

$$S_L = S_P + S_X + S_B, \text{psi} \tag{2.43}$$

The maximum permitted longitudinal pipe is $S_L \leq 0.75ST$, where S is the specified minimum yield strength, psi (MPa), per Table 2.32 (§841.1.1(a)), and T is the temperature derating factor per Table 2.35 (§841.1.8).

2.5.10 Flexibility analysis for unrestrained piping

There is no need for formal flexibility analysis for an unrestrained piping system that

- duplicates or replaces without significant change a system operating with a successful record;
- can be readily judged adequate by comparison with previously analyzed systems;
- is of uniform size, has no more than two pints of fixation, has no intermediate restraints, and falls within the limitations of the following empirical equation:

$$\frac{DY}{(L-U)} \leq K \tag{2.44}$$

where

D = nominal outside diameter of pipe, in. (mm)
K = 0.003, for US customary units (208, for SI units) listed in Equation 2.44
L = developed length of piping between anchors, ft. (m)
U = straight line separation between anchors, ft. (m)
Y = resultant of total displacement strains, in. (mm), to be by the system

Note: No general proof can be offered that the above empirical equation always yields conservative results. It is not applicable to systems used in service cyclic conditions. It should be used with caution in configurations such as unequal leg U-bends having $L/U > 2.5$ or nearly straight "sawtooth" runs or where $I \geq 5$ due to thin-walled design or where displacements not in the direction connecting anchor points constitute a large part of the total displacement. There is no assurance that terminal reactions will be acceptably low even if a piping system falls within the limitations of Equation 2.40.

Any piping system that does not meet one of the criteria above should undergo a flexibility stress analysis by a simplified, appropriate, or comprehensive method as deemed appropriate.

2.5.11 Flexibility stress and stresses due to periodic or cyclic loading

The stress range in unrestrained piping due to thermal expansion and periodic, vibrational, or cyclic displacements or loads shall be computed as

$$S_E = M_E/Z \tag{2.45}$$

where M_E is the resultant intensified moment range from one stress state to another. The resultant intensified moment shall be calculated as

$$M_E = \left[(iM_i)^2 + (i_o M_o)^2 + M_i^2\right]^{1/2}, \text{ lb} - \text{in. (Nm)} \tag{2.46}$$

The cyclic stress range $S_E \leq S_A$, where

$$S_A = f[1.25(S_t + S_h) - S_L] \tag{2.47}$$

where

$$f = 6N^{-0.2} \leq 1.0 \tag{2.48}$$

where

N = equivalent number of cycles during the expected service life of the piping system
$S_t = 0.33S_uT$ at the minimum installed or operating temperature
$S_h = 0.33S_uT$ at the maximum installed or operating temperature
S_L = longitudinal stress calculated according to Equation 2.43, psi (MPa)
S_H = specified minimum UTS, psi (MPa)
T = temperature derating factor (see Table 2.35)

When the computed stress range varies, S_E is defined as the greatest computed stress range. The value of N in such cases can be calculated as

$$N = N_E + \Sigma\left[r_i^5 N_i\right] \quad \text{for } i = 1, 2, \ldots \tag{2.49}$$

where

N_E = number of cycles of maximum computed stress range, S_E
N_i = number of cycles associated with stress range, S_i
$r_i = S_i/S_E$
S_i = any computed stress range smaller than, S_E, psi (MPa)

2.5.12 Minimum cover for buried pipelines

Buried pipeline mains should be installed with a cover not less than 24 in. (610 mm). When this provision cannot be met or where external loads may be excessive, the main should be encased, bridged, or designed to withstand any such anticipated external

Table 2.38 Pipeline cover required

Location	Cover, in. (mm)		
	For normal excavation	For rock excavation [Note (1)]	
		Pipe size NPS 20 (DN 500) and smaller	Pipe size larger than NPS 20 (DN 500)
Class 1	24 (610)	12 (300)	18 (460)
Class 2	30 (760)	18 (460)	18 (460)
Classes 3 and 4	30 (760)	24 (610)	24 (610)
Drainage ditch at public roads and railroad crossings (all locations)	36 (910)	24 (610)	24 (610)

Note: (1) Rock excavation is excavation that requires blasting.
(Courtesy of ASME B31.8)

loads. When farming or other operations might result in deep plowing, in areas subject to erosion, or in locations where future grading is likely, such as road, highway, railroad, and ditch crossings, additional protection should be provided.

Except for offshore pipelines, buried pipelines should be installed with a cover not less than that shown in Table 2.38.

2.5.12.1 Clearance between pipelines or mains and other underground structures

There shall be at least 6 in. (150 mm) of clearance whenever possible between any buried pipeline and any other underground structure not used in conjunction with the pipeline. When such clearance cannot be attained, precautions to protect the pipe should be taken, such as the installation of casing, bridging, or insulating material.

There should be at least 2 in. (50 mm) of clearance whenever possible between any buried gas main and any other structure not used in conjunction with the main. When such clearance cannot be attained, precautions to protect the main should be taken, such as the installation of insulating material or casing.

Casing requirements under railroads, highways, roads, or streets should be designed to withstand the superimposed loads. Where there is a possibility of water entering the casing, the ends of the casing should be sealed. If the end sealing is of a type that will retain the maximum allowable operating pressure of the carrier pipe, the casing should be designed for this pressure and pipe and at least to the design factor of 0.72.

2.5.13 Testing after construction

All piping systems should be tested after construction to the requirements of the code except for pretested fabricated assemblies and welded tie-in connections where post-construction tie-in testing is not practical.

Single lengths or multiple welded lengths of pipe previously tested in accordance with the code for the purposes of repair or replacement do not require a post-construction retest.

The circumferential welds associated with connecting pretested assemblies, pretested repair pipe lengths or sections, and welded tie-in connections not pressure-tested after construction should be inspected by radiographic or other accepted nondestructive methods.

Nonwelded tie-in connections not pressure-tested after construction should be leak-tested at not less than the pressure available when the tie-in is placed into service.

2.5.14 Pressure test requirements

2.5.14.1 Piping systems operated at hoop stresses more than 30% of minimum specified yield strength

Portions of piping systems to be operated at a hoop stress more than 30% of the specified minimum yield strength of the pipe should be subjected at any point to a hydrostatic proof test equivalent to not less than 1.25 times the internal design pressure at that point (see §841.3.2). The permissible pressure test media are stated in Table 2.39 (B31.8 Table 841.3.2.1). The recommended test medium is water. Sour gas (defined in § 803) and flammable gas may only be used for testing purposes in Location Class 1: Division 2 locations. When either of these media is utilized, the public should be removed to a safe distance during the test and testing personnel should be equipped with appropriate personnel protective equipment. Both sour gas and flammable gas tests must meet the test pressure limitations in Table 2.40 (B31.8 Table 841.3.3.1).

The pressure test medium requirements of Table 2.39 (B31.8 Table 841.3.2.1) for the pressure testing of pipelines in Location Classes 3 and 4 need not apply, if, at the time, pipelines are first ready for pressure testing, one or both of the following conditions exist:

(1) Ground temperature at pipe depths are sufficiently low during the test to cause the test medium to change state and cause damage or blockage that would damage the pipe or invalidate the test and use of chemical freeze depressants is not possible.
(2) Approved water of satisfactory quality is not reasonably available in sufficient quantity.

When one or both of the above conditions exist, it is permissible to pressure test using air or nonflammable, nontoxic gases as the pressure test medium provided that all of the following are met:

(1) The maximum hoop stress during pressure testing is less than 50% of the specified minimum yield strength in Location Class 3 and less than 40% of the specified minimum yield strength in Location Class 4.
(2) The maximum pressure at which the pipeline is to be operated does not exceed 80% of the maximum field test pressure.
(3) The pipe involved has been confirmed to be fit for service and has a longitudinal joint factor of 1.00 (see Table 2.34).

Before being placed in service, a newly constructed pipeline system should be strength-tested for a minimum of two (2) hours at a minimum pressure equal to or greater than

Table 2.39 Test requirement for steel pipelines and mains to operate at hoop stresses of 30% or more of the specified minimum yield strength of the pipe

1	2	3	4	5	6
			Pressure test prescribed		
Location Class	Maximum design factor, *F*	Permissible test medium	Minimum	Maximum	Maximum allowable operating pressure, the lesser of
1 Division 1	0.8	Water	1.25 × MOP	None	TP ÷ 1.25 or DP
1 Division 2	0.72	Water	1.25 × MOP	None	TP ÷ 1.25 or DP
	0.72	Air or gas [Note (1)]	1.25 × MOP	1.25 × DP	TP ÷ 1.25 or DP
2	0.6	Water	1.25 × MOP	None	TP ÷ 1.25 or DP
	0.6	Air [Note (1)]	1.25 × MOP	1.25 × DP	TP ÷ 1.25 or DP
3 [Note (2)]	0.5	Water [Note (3)]	1.50 × MOP	None	TP ÷ 1.5 or DP
4	0.4	Water [Note (3)]	1.50 × MOP	None	TP ÷ 1.5 or DP

DP = design pressure, MOP = maximum operating pressure (not necessarily the maximum allowable operating pressure), TP = test pressure.
General notes: (a) This table defines the relationship between test pressures and maximum allowable operating pressures subsequent to the test. If an operating company decides that the maximum operating pressure will be less than the design pressure, a corresponding reduction in the prescribed test pressure may be made as indicated in the pressure test prescribed, minimum, column. If this reduced test pressure is used, however, the maximum operating pressure cannot later be raised to the design pressure without retesting the line to a higher test pressure. See Paragraphs 805.2.1(d), 845.2.2, and 845.2.3. (b) Gas piping within gas pipeline facilities (e.g., meter stations, regulator stations, etc.) is to be tested and the maximum allowable operating pressure qualified in accordance with Paragraph 841.3 and Tables 841.3.2-1 and 841.3.3-1 subject to the appropriate location class, design factor, and text medium criteria. (c) When an air or gas test is used, the user of this Code is cautioned to evaluate the ability of the piping system to resist propagating brittle or ductile fracture at the maximum stress level to be achieved during the test.
Notes: (1) When pressure testing with air or gas, see Paragraphs 841.3.1(c), 841.3.2(a)-(c), and Table 841.3.3-1. (2) Compressor Station piping shall be tested with water to Location Class 3 pipeline requirements as indicated in Paragraph 843.5.1(c). (3) For exceptions, see Paragraphs 841.3.2(b) and (c).
(Courtesy of ASME B31.8)

Table 2.40 Maximum hoop stress permissible during an air or gas test

Test medium	Location Class, percent of specified minimum yield strength		
	2	3	4
Air or nonflammable nontoxic gas	75	50	40
Flammable gas	30	30	30

Note: (1) Refer to Paragraph 841.3.2(c).
(Courtesy of ASME B31.8)

that specified in Table 2.37 (B31.8 Table 841.3.2.1) after stabilization of temperatures and surges from pressuring operations has been achieved. The minimum pressure should be obtained and held at the highest elevation in the pipeline system.

2.5.14.2 Piping systems operated at hoop stresses less than 30% of minimum specified yield strength

Steel piping that operates at hoop stresses less than 30% of the specified minimum yield strength in Location Class 1 should be tested in accordance with the requirements of "Leak Tests for Pipelines that Operate at 100 psig (690 kPa) or More." In Location Classes 2, 3, and 4, piping should be tested in accordance with Table 2.39 (B31.8 Table 841.3.2.1), except that gas or air may be used as the medium within the maximum limits set in Table 2.40 (B31.8 Table 841.3.3.1).

2.5.15 Leak testing

2.5.15.1 Leak tests for pipelines that operate at 100 psig (690 kPa) or more

Pipelines should be tested after construction and before being placed in operation to demonstrate that it does not leak. If the test indicates that a leak exists, the leak or leaks should be located and eliminated, unless it can be determined that no undue hazard to public safety exists.

The test procedure should be capable of disclosing all leaks in the section being tested and should be selected after giving due consideration to the volumetric content of the section and its location. This requires the exercise of responsible and experienced judgment rather than numerical precision.

In all cases where a line is to be stressed in a strength proof test to a hoop stress level of 20% or more of the specified minimum yield strength of the pipe and gas or air is the test medium, a leak test should be made at a pressure in the range from 100 psig (690 kPa) to that required to produce a hoop stress of 20% of the minimum specified yield, or the line should be walked while the hoop stress is held at approximately 20% of the specified minimum yield strength.

2.5.15.2 Leak tests for pipelines that operate less than 100 psig (690 kPa)

Pipelines and related equipment that will operate less than 100 psig (690 kPa) should be tested after construction and before being placed in operation to demonstrate that it does not leak. Gas may be used as the test medium at the maximum pressure available in the distribution system at the time of the test. In this case, the soap bubble test may be used to locate leaks if all joints are accessible during the test. Testing at available distribution system pressures may not be adequate if substantial protective coatings are used that would seal a split seam. If such coatings are used, the leak test pressure should be 100 psig (690 kPa).

2.5.16 Offshore gas transmission pipelines

2.5.16.1 General considerations

ASME B31.8, Chapter VIII pertains only to offshore gas transmission systems as defined in Paragraph A801 General. The chapter is organized to parallel the numbering and content of the first six chapters of the code. Paragraph designations are the same as those in the first six chapters, with the prefix "A."

All provisions of the first six chapters of the code are also requirements of this chapter unless specifically modified herein. If the text in this chapter adds requirements, the requirements in the original chapter with the same title and number also apply. If a provision in this chapter is in conflict with one or more provisions in other chapters, the provisions in this chapter govern.

It is the intent of this chapter to provide requirements for the safe and reliable design, installation, and operation of offshore liquid pipeline systems. It is not the intent of this chapter to be all inclusive. Engineering judgment must be used to identify special considerations that are not specifically addressed. It is not the intent of this chapter to prevent the development and application of new equipment and technology. Such activity is encouraged as long as the safety and reliability requirements of the code are satisfied.

2.5.16.2 Design conditions

A number of physical properties, referred to as design conditions, govern the design of the offshore pipeline system so that it meets installation, operation, and other postinstallation requirements. Some of the factors that may influence the safety and reliability of an offshore pipeline and riser include the following:

- Waves
- Current
- Marine soils
- Wind
- Ice
- Seismic activity
- Platform motion
- Temperature

- Pressure
- Water depth
- Support settlement
- Accidental loads
- Commercial shipping
- Fishing/shrimping activities

The design of offshore pipelines is often controlled by installation considerations rather than by operating conditions.

2.5.16.3 Installation design considerations

The design of an offshore pipeline system suitable for safe installation and the development of offshore pipeline construction procedures should be based on the following parameters (B31.8 §A841.2.1 to §A841.2.5):

- Weight
- Profile
- Environmental loads
- Loads imposed by construction equipment and vessel motion
- Bottom soils

2.5.16.4 Operational design considerations

All parts of the offshore pipeline and riser system should be designed for the most critical combinations of operational and design environmental loads, acting concurrently, to which the system may be subjected.

Operational loads that should be considered are those factors imposed on the pipeline system under static environmental conditions including the following:

1. Weight of unsupported pipe spans, including the weight of pipe, coatings and their absorbed water, attachments to the pipe, and transported contents
2. Internal and external pressures
3. Thermal expansion and contraction
4. Buoyancy
5. Static soil loadings (e.g., overburden)

Environmental loads that should be considered include the following:

1. Waves
2. Current
3. Wind
4. Seismic events
5. Accidental loadings (e.g., trawl boards and anchors)
6. Dynamic soil-induced loadings (e.g., mudslides and liquefaction)
7. Ice loads (e.g., weight, floating impacts, and scouring)

2.5.16.5 Strength considerations

Design and installation analyses should be based on accepted engineering methods, material strength, and applicable design conditions.

2.5.16.5.1 Strength consideration during installation

The following design considerations should be considered during installation:

- Buckling
- Collapse
- Allowable longitudinal stress
- Allowable strains
- Installation fatigue
- Special assemblies
- Residual stresses

2.5.16.5.2 Strength consideration during operations

Pipelines and risers should be designed against the following possible modes of failure:

- Excessive yielding
- Buckling
- Fatigue failure
- Ductile fracture
- Brittle fracture
- Loss of in-place stability
- Propagating fracture
- Corrosion
- Collapse

Considerations should be given to impacts due to the following:

- Foreign objects
- Anchors
- Trawl boards
- Vessels and ice kneels

2.5.16.6 Design against yielding

Pipelines and risers should be designed against yielding. The combined stress calculations and allowables of §833.2-833.6 are superseded by the provisions of §A842.2.2 (b) and (c) (refer to Table 2.41 (B31.8 §A842.2.2.1)).

Table 2.41 Design factors for offshore pipelines, platform piping, and pipeline risers

Location	Hoop stress, F_1	Longitudinal stress, F_2	Combined stress, F_3
Pipeline	0.72	0.80	0.90
Platform piping and risers	0.50	0.80	0.90 [Note (1)]

Note: (1) The wall thickness used in the calculation of combined stress for platform piping and risers shall be based upon specified minimum wall thickness, including manufacturing, corrosion, and erosion allowances. (Courtesy of ASME B31.8)

2.5.16.6.1 Hoop stress

For pipelines and risers, the tensile hoop stress due to the difference between internal and external pressures should not exceed the value given below. S_h may be calculated by either of the following (*Note:* Sign convention is such that tension is positive and compression is negative.):

$$S_h \leq F_1 ST \tag{2.50}$$

$$S_h = (P_i - P_e)\frac{D}{2t} \tag{2.51}$$

$$\left[S_h = (P_i - P_e)\frac{D}{2000t}\right] \tag{2.52}$$

or

$$S_h = (P_i - P_e)\frac{D - t}{2t} \tag{2.53}$$

$$\left[S_h = (P_i - P_e)\frac{D - 1}{2000t}\right] \tag{2.54}$$

where

D = nominal outside diameter of pipe, in. (mm)
F_1 = hoop stress design factor from Table 2.41 (Table A842.2.2.1)
P_e = external pressure, psi (kPa)
P_i = internal pressure, psi (kPa)
S = specified minimum yield strength, psi (MPa)
S_h = hoop stress, psi (MPa)
T = temperature derating factor from Table 2.35 (Table 841.1.8.1)
t = nominal wall thickness, in. (mm)

Note: It is recommended that Equation 2.50 be used for D/t greater than or equal to 30 and that Equation 2.51 be used for D/t less than 30.

2.5.16.6.2 Longitudinal stress

For pipelines and risers, the longitudinal stress should not exceed values found from

$$|S_L| \leq F_2 S \tag{2.55}$$

where

A = cross-sectional area of pipe material, in.^{2} (mm^2)
F_2 = axial force, lb (N)
M_i = in-plane bending moment, in.-lb (Nm)
M_o = out-of-plane bending moment, in.-lb (Nm)
S = specified minimum yield strength, psi (MPa)
S_L = maximum longitudinal stress, psi (positive tension or negative compression) (MPa)
= $S_a + S_b$ or $S_a - S_b$, whichever results in the larger stress value

S_a = axial stress, psi (positive tensile or negative compressive) (MPa)
$= F_2/A$
S_b = resultant bending stress, psi (MPa)
$= [(i_i M_i)^2 + (i_o M_o)^2]^{1/2/z}$
i_i = in-plane stress intensification factor from Mandatory Appendix E
i_o = out-of-plane stress intensification factor from Mandatory Appendix E
z = section modulus of pipe, in.^{3} (cm^3)
[ ] = absolute value

2.5.16.6.3 Combined stress

For pipelines and risers, the combined stress should not exceed the value given by the maximum shear stress equation:

$$2\left[\left(\frac{S_L - S_H}{2}\right)^2 + S_t\right]^{1/2} \leq F_3 S$$

where

A = cross-sectional area of pipe material, in.^{2} (mm^2)
F_a = axial force, lb (N)
F_3 = combined stress design factor from Table 2.41 (Table A842.2.2.1)
M_i = in-plane bending moment, in.-lb (Nm)
M_o = out-of-plane bending moment, in.-lb (Nm)
M_t = torsional moment, in.-lb (Nm)
S = specified minimum yield strength, psi (MPa)
S_L = maximum longitudinal stress, psi (MPa)
$= S_a + S_b$ or $S_a - S_b$, whichever results in the larger stress value
S_a = axial stress, psi (positive tensile or negative compressive) (MPa)
$= F_a/A$
S_b = resultant bending stress, psi (MPa)
$= [(i_i M_i)^2 + (i_o M_o)^2]^{1/2/z}$
S_h = hoop stress, psi (MPa)
S_t = torsional stress, psi (MPa)
$= M_t/2z$
i_i = in-plane stress intensification factor from Mandatory E
i_o = out-of-plane stress intensification factor from Mandatory E
z = section modulus of pipe, in.^{2} (cm^2)

2.5.16.7 Testing

All pipelines should be tested after installation and prior to operation. The installed pipeline system should be hydrostatically tested to at least 1.25 times the maximum allowable operating pressure. Offshore platform piping and offshore pipeline risers must be tested to at least 1.4 times the maximum allowable operating pressure either before or after installation. Prefabricated portions of platform piping that have been pretested to 1.4 times the maximum allowable operating pressure need not be tested

after installation if all items are tied in by connectors, flanges, or wells have been radiograph-inspected.

The test medium should be water. Additives to mitigate the effects or corrosion, biofouling, and freezing should be considered. Additives should be suitable for the methods of disposal of the test medium. In Arctic areas where freezing of water is a hazard, the use of air, inert gas, or glycol is allowable. Platform gas and compression piping may be tested with inert gas.

Pipelines and assemblies should be tested for a minimum of eight (8) continuous hours. Test duration of prefabricated piping may be two (2) hours.

Further Reading

[1] API RP 14C, Analysis Design, Installation and Testing of Basic Surface Safety Systems for Offshore Production Platforms, seventh ed., API, Washington, DC, 2007.
[2] API RP 14J, Design and Hazards Analysis for Offshore Production Facilities, second ed., API, Washington, DC, 2013.
[3] ASME, ASME Boiler and Pressure Vessel Code, ASME, New York City, 2001. Sec. 8, Divisions 1 and 2.
[4] API RP 520, Design and Installation of Pressure Relieving Systems in Refineries, Part I, seventh ed., API, Washington, DC, 2000.
[5] API RP 520, Design and Installation of Pressure Relieving Systems in Refineries, Part 2, fifth ed., API, Washington, DC, 2003.
[6] API RP 521/ISO 23251, Guide for Pressure-Relieving and De-pressuring Systems, fourth ed., API, Washington, DC, 1999.
[7] "Occupational Safety and Health Standards", regulations, 29 CFR Part 1910, U.S. Dept. of Labor, Washington, DC, March 1999.
[8] API STD 2000, Venting Atmosphere and Low-Pressure Storage Tanks—Non-refrigerated and Refrigerated, fifth ed., API, Washington, DC, 1999.
[9] API STD 526, Flanged Steel Pressure Relied Valves, sixth ed., API, Washington, DC, 2012.
[10] API STD 527, Seat Tightness of Pressure Relief Valves, fourth ed., API, Washington, DC, 2014.
[11] Y.S. Lai, Performance of a safety relief valve under backpressure conditions, J. Loss Prev. Process Ind. 5 (1) (1992) 55–59.
[12] L. Thompson, O.E. Buxton Jr., Maximum isentropic flow of dry saturated steam through pressure relied valves, Trans. ASME J. Press. Vessel. Technol. 101 (1979) 113–117.
[13] Guidelines for Pressure Relief and Effluent Handling Systems, AIChE, New York, NY, 1998.
[14] J.C. Leung, A theory on the discharge coefficient for safety relief valve, J. Loss Prev. Process Ind. 17 (4) (2004) 301–313.
[15] J.C. Leung, Easily size relief devices and piping for two-phase flow, Chem. Eng. Prog. (1996) 28–50. Houston, TX.
[16] K.E. Arnold, M.I. Stewart, Surface production operations, in, Design of Gas-Handling Systems and Facilities, vol. 2, Elsevier, Boston, Mass, 1999. Chapter 13-Pressure Relief.
[17] K.E. Arnold, M.I. Stewart, Petroleum Engineering Handbook, in: Facilities and Construction Engineering, vol. III, Society of Petroleum Engineers, Houston, TX, 2007, Chapter 10-Safety Systems.

Material requirements: Piping materials

3

3.1 Background

Process piping is divided into "pipe" and "tubes." Pipe is customarily identified by "nominal pipe size (NPS)," with wall thickness defined by "schedule number (Sch. No.)," "American Petroleum Institute (API) designation," or "weight." Nonstandard pipe is specified by nominal size with wall thickness stated. Tube, on the other hand, is customarily specified by its outside diameter (OD) and wall thickness, expressed either in Birmingham Wire Gauge (BWG) or in thousands of an inch. The principal uses of tube are in heat exchangers, instrument lines, and small interconnections on equipment such as compressors, boilers, and refrigerators.

As a minimum, pipe must meet the following requirements: mechanical strength, chemical resistance, and thermal resistance. A poor material choice, or process conditions that are not complied with, can result in corrosion, line rupture, cracking, safety hazard, or excessive cost. The consequences of poor material selection may result in a fire, pollution, release of toxic or corrosive products, personnel injury, or death. Pipes are manufactured according to a number of codes and standards. The most widely used codes and standards used in the petroleum and petrochemical industries are as follows:

- American Petroleum Institute (API)
  - Specific to the petroleum industry
  - API Spec 5L commonly used for line pipe
- American Society of Mechanical Engineers (ASME)
  - Construction code for the design, use, and sizing of piping
  - ASME B31.1, B31.3, B31.4, and B31.8 used for design
  - ASME B36.10 used for welded and seamless (SMLS) wrought steel pipe
  - ASME B36.19 used for stainless steel pipe
- International Standardization Organization (ISO)

Note: American National Standard Institute standard is no longer used as it has been incorporated into the ASME Piping Code.

The following standards are also in use but are not as popular as the aforementioned:

- American Society of Testing Materials (ASTM)
- Manufacturers Standardization Society (MSS)
- European Standards (EU)

3.1.1 Size and length

ASME standard B36.10 establishes the sizes of pipe ranging from 1/8 to 80 in. nominal diameter (DN; NPS). Manufacturers normally stock the following NPSs: ½, ¾, 1, $1^1/_4$,

Surface Production Operations. http://dx.doi.org/10.1016/B978-1-85617-808-2.00003-1
Copyright © 2016 Elsevier Inc. All rights reserved.

$1^1/_2$, 2, $2^1/_2$, 3, $3^1/_2$, 4, 5, 6, 8, 10, 12, 14, 16, 18, 20, and 24 in. Pipe sizes $1^1/_4$, $2^1/_2$, $3^1/_2$, and 5 in. are rarely used except to connect to specific equipment. Pipe sizes $^1/_8$, ¼, ¾, and ½ in. are usually restricted to instrument lines that have to mate to equipment.

Straight pipe is supplied in "single-random" lengths (20 ft. (6 m)), "double-random" lengths (40 ft. (12 m)), and "triple-random" lengths (60 ft. (18 m)) minimum average per joint. The ends of these lengths are normally either plain (PE), beveled for welding (BE), or threaded and supplied with one coupling per length ("threaded and coupled" (T&C)). If the pipe is ordered "T&C," the rating of the coupling is specified. Other types of ends, such as grooved for special couplings, can be obtained to order.

3.1.2 Pipe diameter

ASME Piping Code: The pipe diameter is identified by a dimensionless number called "nominal pipe size" or nominal diameter expressed in "nominal inches," for example, NPS ½, ¾, 1, $1^1/_4$, $1^1/_2$, 2, 3, and 4 nominal inches. There is no direct correlation between the NPS and the actual pipe OD up to and including 12 in. After 12 in., the NPS is the actual OD. For example, the actual OD of an NPS 4″ pipe is 4.5″ (114.3 mm) and not 4″ (101.6 mm); and the actual OD of an NPS 14″ pipe is 14″ (355.6 mm) refer to Figure 3.1.

Pipes with NPS less than ½ in. are called tubing and are dedicated to instruments and hydraulic systems. Pipes with NPS larger than 80 in. are usually part of a gas turbine exhaust system. Pipes with NPS of $2^1/_2$″, 5″, 7″, 9″, and 22″ exist but are uncommon and are generally dedicated to firefighting systems. Pipes with NPS of 14″, 22″, and 26″ are usually replaced by 16″, 24″, and 30″ pipes.

ISO Standards: The diameter is identified by an integer called nominal diameter, followed by the ISO numbering. In most cases, the DN is obtained by multiplying the number of inches of the NPS by 25. See Table 3.1 or example, an NPS of 14 in. becomes DN 350.

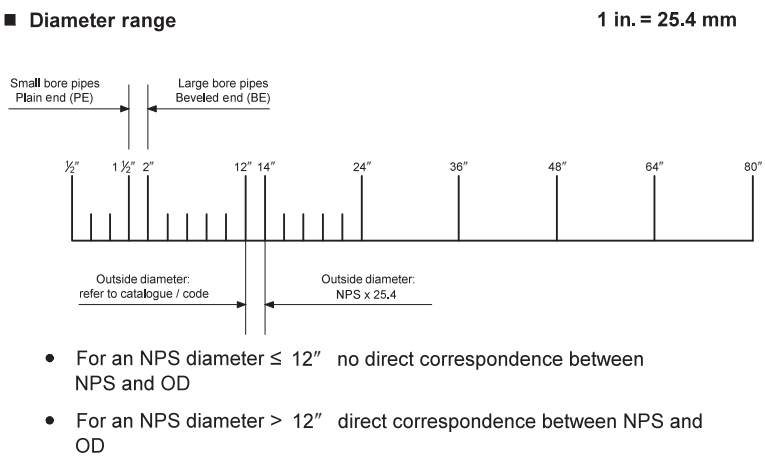

Figure 3.1 ASME pipe diameter.

Table 3.1 NPS versus DN

NPS versus DN																
NPS	½	¾	1	$1^1/_2$	2	3	4	6	8	10	12	14	16	18	20	24
DN	15	20	25	40	50	80	100	150	200	250	300	350	400	450	500	600

3.1.3 Pipe wall thickness

Each size of pipe is made in several wall thicknesses that have been established by the following entities:

- ASME and the ASTM, through "schedule numbers" and "manufacturers' weights" that are designated as "standard (STD)," "extra-strong (XS)," and "double-extra-strong (XXS)," drawn from dimensions established by manufacturers.
- API, through its standard 5L, for "line pipe." Dimensions in this standard have no references for individual sizes and wall thicknesses.

ASME B36.10 created the "schedule numbers" that approximates the value of the following expression:

$$Schedule\,No. = \frac{1000(P)}{S} \tag{3.1}$$

where

P = allowable internal fluid pressure, psig,
S = allowable material stress for steel, psi (bar),
= 30,000 psi,
= 2000 bar.

This relationship is restricted to the determination of the thickness of a pipe not subjected to a corrosion allowance. For example, a pipe withstanding an internal pressure of 600 psi (40 bars) and made of steel capable of withstanding an allowable stress of 30,000 psi (2000 bars) would have a minimum schedule of 20. Schedule numbers are defined by dimensionless integers: 10, 20, 30, 40, 60, 80, 100, 120, 140, and 160 for low-carbon steels. ASME B36.19 defines schedule numbers by dimensionless integers, followed by the letter "S" for stainless steel: 5S, 10S, 40S, and 80S. Several schedules and therefore wall thickness values are assigned to each NPS. The tables in the appendix show the various schedules for DN pipe.

The use of schedule number was an attempt to standardize so that all pipe sizes with the same schedule number made of the same materials would have nearly the same operating pressure and could be used in the same system. There are exceptions so one needs to be careful! For example, 12″ (304.8 mm) and below usually use nominal size and schedule number, while above 12″ (304.8 mm) generally use OD and wall thickness.

With an equal schedule, the higher the DN, the greater the wall thickness, for example,

- NPS 3 in. pipe for Sch. 80 thickness 0.3 in. (7.62 mm),
- NPS 6 in. pipe for Sch. 80 thickness 0.432 in. (10.973 mm).

The wall thickness designations STD, XS, and XXS have been commercially used for many years. When schedule numbers were introduced, it was decided that

- STD and Sch. 40 are identical for NPS $\leq$ 10 in.,
- XS and Sch. 80 are identical for NPS $\leq$ 8 in.

"Manufacturers' weights" were originally developed in the 1930s and were to be superseded by schedule numbers. However, the demand for these wall thicknesses has caused their manufacture to continue. Certain fittings are only available in manufacturers' weights.

Pipe dimensions from the aforementioned sources are incorporated in ASME Standard B36.10M. Tables A1 (field units) and A1 (SI) (found in Appendix 1) list dimensions for welded and SMLS steel pipe in this standard.

3.1.4 Material selection

It's the designer's responsibility to determine which material is the best for the application, based on available data, economics, and prior experience. Materials can be broadly grouped into ferrous, nonferrous, and plastic pipe. Each of the materials in each of these groups is discussed below.

3.2 Ferrous metal piping

3.2.1 Carbon steel

Carbon steel pipe is the most commonly used material for process piping. It has the advantage of wide availability, high strength, and a large array of connection possibilities, for example, screwed, socket-welded, and butt-welded. Steel pipe should be selected for the required strength and durability required for the application and the ductility and machinability required to join it and form it into piping spools. The pipe must withstand the pressure, temperature, and corrosion conditions of the application. These requirements are met by selecting pipe made to an appropriate ASTM or API standard.

3.2.1.1 Applications

Carbon steel pipe is used for liquid, gas, and steam services both above- and below-ground services. It is not recommended for use in corrosive services but may be used in caustic services.

3.2.1.2 Grades of steel used

There are many grades or strengths of carbon steel pipe and they are available in a number of wall thicknesses. We have seen that the allowable stress is used to determine what wall thickness is required. The allowable stress is a function of both the metallurgy of the material and the method of manufacturer.

The various piping specifications provided by ASTM and API provide guidelines for both the metallurgy and the method of manufacture. The most widely piping specifications for process lines are ASTM Specifications A-53 and A-106 and API Standard 5L. The principal wall thicknesses used are defined by schedules, for example, Schedule 40, Schedule 80, and weights, for example, STD, XS, and XXS. Both ASTM A53 and ASTM A106 pipe are fabricated SMLS or seamed, by electric resistance welding, in Grades A and B. Grades B have higher tensile strength. Three grades of ASTM A106 are available—Grades A, B, and C, in order of increasing tensile strength.

Table 3.2 provides the specifications for a given temperature range. For years, most pipes were made from Grade B steel, which has a minimum yield strength of 35,000 psi. Construction of high-pressure, large-diameter, cross-country transmission lines created a need for high-strength field-weldable steel that would allow a substantial savings in steel tonnage. API Grades X-42 through X-70 were developed with strengths of 42,000-70,000 psi.

Figure 3.2 illustrates a typical stress-strain diagram for steel pipe. Table 3.3 illustrates the savings that can be realized by using Grade X pipe. Care must be taken to balance savings against corrosion allowances, special welding techniques required, minimum wall thickness criteria of the codes, and reduction in safety for hot-tapping operations. Some high-strength or alloyed pipe may not be suitable for certain

Table 3.2 Metal design temperature for piping

Design temperature	Specification
650 to 60 °F	API 5L
59 to −20 °F	A-53
−21 to −50 °F	A-106
−51 to −150 °F	API 5L
−151 to −325 °F	A-106
	A-333 Grade 1 or 6
	A-333 Grade 304
	A-312 Grade 304
	A-358 Grade 304
	A-312 Grade 304
	A-358 Grade 308

Note: Metal design temperature shall be the design operating temperature plus 50 F or 10%, whichever is greater, for services 60 °F and above. For services 59 °F and below, subtract 5 °F or 10% whichever or greater from the design operating temperature where applicable; allowance should also be included for temperature effects due to process variation, especially at low temperature.

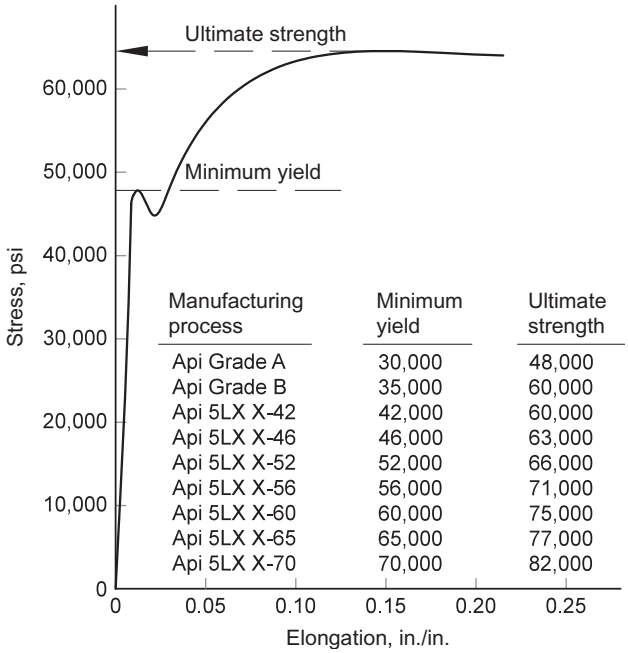

Figure 3.2 Stress-strain diagram for API 5LX X-46 pipe.

Table 3.3 Comparative cost of Grades B and X—grade pipe for a 4.5 in. OD line having a maximum allowable working pressure of 3100 psi and a design factor of 0.72 (Reference: ASME B31.8 and B31.4)

Pipe grade and yield strength	Pipe wall thickness required (in.)	MAWP (psi)	Cost ($/ft.)	Cost saving over grade B ($/mile)
Grade B (35,000 psi)	0.337	3774	38.26	
Grade X-42 (42,000 psi)	0.237	3185	30.02	43,507
Grade X-46 (46,000 psi)	0.219	3219	25.40	67,900
Grade X-52 (52,000 psi)	0.188	3120	22.70	82,156

Note: Cost based on FOB mill price January 2015 for electric resistance-welded pipe.

corrosive environments. Table 3.4 compares the relative cost of steel pipe versus common alloys.

Steel specifications in other countries may correspond with US specifications. Some corresponding international standards for carbon steels and stainless steels are shown in Table 3.5.

Table 3.4 Comparison of steel pipe versus other alloys

Carbon steel	1
Stainless steel 304L	3 to 5
Stainless steel 316L	4 to 6
Nickel 200	19 to 38
Monel-Inconel-Incoloy	12 to 20
Hastelloy	25 to 38
AL alloys	4
Copper	3
Lead	1
Gold	14,000
Platinum	17,000

3.2.1.3 Manufacturing processes

The manufacturing process of pipe is determined by the material, diameter, wall thickness, and quality for a specific service. Carbon steel piping is classified according to the manufacturing methods as follows:

- Steel and malleable iron
  - SMLS
  - Electric resistance weld (ERW)
  - Submerged arc weld (SAW)
  - Double submerged arc weld (DSAW)
  - Furnace weld, butt-welded or continuous weld
  - Spiral-welded pipe

3.2.1.3.1 SMLS pipe

SMLS pipe is produced by heating a round billet of steel and then piercing it with a bullet-shaped piercer, over which the steel is stretched. This is followed by rolling and drawing to produce the desired dimensions. The final product is hydrostatically tested, inspected, coated if required, and stenciled with the specification. SMLS pipe is used in high-pressure, most critical locations and under most severe operating conditions. SMLS pipe is supplied according to ASTM Specifications A53, A106, A333, A312, A358, etc., and API 5L pipe

Sizes: 1/8″ (3.175 mm) nominal to 26″ (660.4 mm) OD. Less than 2 3/8″ (60.325 mm) OD is known as pressure tubing that has different dimensional standards (wall thickness and diameter). SMLS pipe, where available, is used in oil and gas production facilities both onshore and offshore (other than transmission lines) less than 26″ (660.4 mm) OD.

3.2.1.3.2 ERW pipe

ERW pipe is made from coils that are cupped longitudinally by forming rolls and a thin-pass section of rolls that brings the ends of the coil together to form a cylinder.

Table 3.5 Comparison: US and international specifications for steel pipe

	USA	UK	W. Germany	Sweden
Carbon steel pipe	*ASTM A53*	*BS 3601*	*DIN 1629*	
	Grade ASMLS	HFS 22 and CDS 22	Si 35	SIS 1233-05
	Grade B SMLS	HFS 27 and CDS 27	St 45	SIS 1434-05
	ASTM A53	*BS 3601*	*DIN 1626*	
	Grade A E RW	ERW 22	Blatt 3St 34–2 ERW	
	Grade B E RW	ERW27	Blatt 3 St 37–2 ERW	
	ASTM A53	*BS 3601*	*DIN 1626*	
	FBW	BW 22	Blatt 3St 34–2 FBW	
	ASTM A106	*BS 3602*	*DIN 17175*[a]	
	Grade A	HFS 23	St 35-8	SIS 1234-05
	Grade B	HFS 27	St 45-8	SIS 1435-05
	Grade C	HFS 35		
	ASTM A134	*BS 3601*	*DIN 1626*	
		EFW	Blatt 2 EFW	
	ASTM A135	*BS 3601*	*DIN 1626*	
	Grade A	ERW 22	Blatt 3 St 34–2 ERW	SIS 1233-06
	Grade B	ERW 27	Blatt 3St 37–2 ERW	SIS 1434-06
	ASTM A139	*BS 3601*	*DIN 1626*	
	Grade A	EFW 22	Blatt 2 St 37	
	Grade B	EFW 27	Blatt 2 St 42	
	ASTM A155	*BS 3602*	*DIN 1626, Blatt 3 with certification C*	
	Class 2			
	C 45		St 34-2	
	C 50		St 37-2	
	C 55	EFW 28	St 42-2	
	KC 55		St 42–2 •	
	KC 60	EFW28S	St 42–2 #	
	KC65		St 52 3	
	KC 70		St 52-3	
	API 5L	*BS 3601*	*DIN 1629*	
	Grade A SMLS	HFS 22 and CDS 22	St 35	SIS 1233-05
	Grade B SMLS	HFS 27 and CDS 27	St 45	SIS 1434-05
	API 5L	*BS 3601*	*DIN 1625*	
	Grade A E RW	ERW 22	Blatt 3 St 34–2 ERW	SIS 1233-06
	Grade BERW	ERW 27[b]	Blatt 4 St 37–2 ERW	SIS 1434-06[b]
	API 51	*BS 3601 Double-welded*	*DIN 1626*	
	Grade A EFW	EFW 22	Blatt 3 St 34–2 FW	
	Grade BEFW	EFW 27[b]	Blatt 4 St 37–2 FW	
	API 5L	*BS 3601*	*DIN 1626*	
	FBW	BW 22	Blatt 3 St 34 2 FBW	
Stainless steel pipe	*ASTM A312*	*BS 3605*	*WSN Designation*	
	TP 304	Grade 801	4301 × 5 CrNi 18 9	SIS 2333-02
	TP 304H	Grade 811		
	TP 304 L	Grade 801 L	4306 × 2 CrNi 18 9	SIS 2352-02
	TP 310		4841 × 15 CrNiSi 25 20	SIS 2361-02
	TP 316	Grade 845	4401 × 5 CrNiMo 18 10 4436	SIS 2343-02
	TP316H	Grade 855		
	TP316L	Grade 845L	4404 × 2 CrNiMo 18 10	SIS 2353-02
	TP 317	Grade 846		
	TP 321	Grade 822 Ti	4541 × 10 CrNiTi 18 9	SIS 2337-02
	TP 321H	Grade 832 Ti		
	TP 347	Grade 822 Nb	4550 × 10 CrNiNb 18 9	SIS 2338-02
	TP347H	Grade 832 Nb		

[a]Specify "Si-killed."
[b]Specify API Si Crede B letting procedures for these steels.

The ends pass through a high-frequency welder that heats the steel to 2600 °F and squeezes the ends together to form a fusion weld. The weld is then heat-treated to remove welding stresses and the pipe is cooled, sized to the proper OD, and straightened. ERW pipe is produced either in individual lengths or in continuous lengths that are then cut into individual lengths. ERW is supplied according to ASTM A53 and A135 and API Specification 5L. It is supplied is sizes 2 3/8″ (60.325 mm) to 30″ (762 mm) OD.

ERW is the most common type of manufacturing process due to its low initial investment for manufacturing equipment and the process' adaptability in welding different wall thicknesses. The pipe is not fully normalized after welding, thus producing a heat-affected zone on each side of the weld that results in nonuniformity of hardness and grain structure, thus making the pipe more susceptible to corrosion. Therefore, ERW pipe is not as desirable as SMLS pipe for handling corrosive fluids. However, it is used in oil and gas production facilities and transmission lines, after normalized or cold expanded, for 26″ (660.4 mm) OD and larger lines.

3.2.1.3.3 SAW or DSAW pipe

SAW and DSAW pipes are produced from plate (skelp's), which are either formed into a "U" and then an "O" and then welded along the straight seam (SS) or twisted into a helix and then welded along the spiral seam (SW). DSAW longitudinal butt joint uses two or more passes (one inside) shielded by granular fusible materials where pressure is not used. DSAW is used for pipe greater than 4″ (508 mm) nominal. SAW and DSAW are mechanically or hydraulically cold expanded and are supplied according to ASTN Specifications A53 and A135 and API Specification 5L. It is supplied in sizes 20″ (508 mm) OD to 30″ (762 mm) OD.

3.2.1.3.4 Furnace-weld, butt-welded, or continuous weld (CW) pipe

This refers to the same process and is called furnace-butt weld. The pipe is produced by the continuous-welding butt-welded process. Butt-welded pipe is made from Bessemer steel, with a high phosphorus content, which offers superior welding characteristics. The longitudinal seam is joined by mechanical pressure after the entire steel strip from which the tube is formed has been heated to proper welding temperature. Furnace butt-welded pipe is normally used for domestic (United States) and firewater service only. In the butt-welded process (Figure 3.3), the skelp, whose edges have been slightly beveled for joining, is hot-rolled and heated in a furnace to a welding heat. The pipe is then pulled through a ring die or bell and the pipe is welded by pressing the edges together at a high temperature. The pipe OD is reduced and the wall thickness is achieved in a stretching mill. A saw cuts the pipe to length and the pipe enters a sizing mill that reduces the pipe to the final OD. The pipe is straightened, end-finished, hydro-tested, coated if required, stenciled, and inspected.

Butt-welded pipe is supplied according to ASTM Specifications A53 and A120 and API Specification 5L for line pipe. It is supplied in sizes from 1/8 to 4 in. in diameter. This is a low-cost manufacturing method, and because of the quality of the welding, it

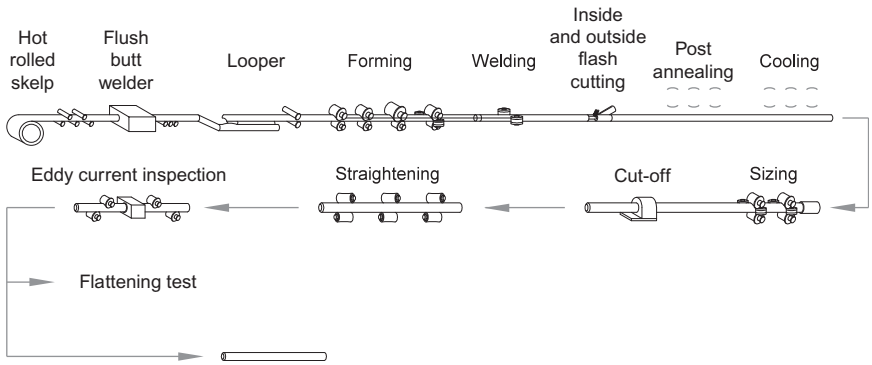

Figure 3.3 Butt-welded manufacturing process.
(Courtesy of Kawasaki Steel Corporation)

has a joint efficiency of not more than 60%. Furnace-butt weld pipe is not recommended for use where internal corrosion is anticipated.

3.2.1.3.5 Spiral-welded pipe

Spiral-welded pipe is produced from coils of steel that are unwound and flattened. The flattened strip is formed by angled rollers into a cylinder of the desired diameter. Interior and exterior SAW seal the spiral seam. At the end of the coil, a new coil is butt-welded to the trailing edge of the pipe, forming a cross seam. The pipe is cut to length and the ends are beveled if required. Spiral-welded pipe is primarily used for water distribution service. Spiral-welded pipe is available in sizes from 24 in. (60 cm) to 144 in. (365 cm).

3.2.2 Stainless steel

Stainless steel pipe is used when corrosion resistance is required. The addition of chromium gives stainless steel its corrosion resistance properties. Austenitic stainless steels, identified with the 300 series, contain a maximum of 0.15% carbon and a minimum of 16% chromium, along with nickel and/or manganese. Austenitic stainless steels are nonmagnetic and have the best high-temperature strengths of all the stainless steels. Ferritic stainless steels, identified with the 400 series, contain 14-27% chromium and are magnetic. Martensitic stainless steels contain 11.5-18% chromium and are also magnetic. Martensitic stainless steels are commonly used in valve components.

Austenitic stainless steels are the most commonly used in piping systems. The most common grades used in piping are 304 and 316. There are subsets of these that contain lower carbon, making them less susceptible to carbide precipitation. These are designated by the suffix “L.” Stainless steels are susceptible to stress corrosion cracking and so exposure to chloride compounds should be avoided.

3.2.2.1 Applications

Stainless steel piping is used whenever iron dissolution cannot be tolerated. Stainless steel is used whenever corrosion needs to be avoided, as in heat exchangers and boilers.

3.2.2.2 Manufacturing processes

Stainless steel manufacturing processes are similar to those of carbon steel. A common rule of thumb is that the material cost of stainless steel is three times more than that of carbon steel. Therefore, manufacturers have developed lighter wall thicknesses to make stainless steels more attractive. The mill tolerance of 12.5% must be applied to stainless steel piping as well as to carbon. Usually, any corrosion allowances can be eliminated in the thickness calculation though, since stainless resists corrosion under most applications.

3.2.3 Cast iron

Cast iron contains between 2% and 6.67% carbon. These metals are strong but brittle. They exhibit very low ductility and malleability and cannot be drawn, rolled, or worked at room temperature. A sharp blow with a hammer can crack a cast iron pipe. Cast irons melt readily and can be cast into complicated shapes and machined. This property makes them well suited for some valve bodies.

3.2.3.1 Applications

Since cast iron is so brittle, it is not often used for pressure piping applications, although ASME B31.3 contains basic allowable stress data for gray cast iron pipe. Cast iron pipe is used primarily for drain, waste, and vent applications.

3.2.3.2 Manufacturing process

Cast iron pipe is manufactured by the pit, horizontal or centrifugal method. In the vertical pit method, a mold is made by ramming sand around a pattern and drying the mold in an oven. A core is inserted in the mold and molten iron is poured between the core and the mold. In the horizontal method, a machine is used to ram sand around horizontal molds that have core bars running through them. The molten iron is poured into the molds from multiple-lipped ladle designed to draw the iron from the bottom to eliminate the introduction of impurities. In the centrifugal method (Figure 3.4), sand-lined molds are used that are placed horizontally in centrifugal casting machines. While the mold revolves, an exact quantity of molten iron is introduced, which, by action of the speed of rotation, distributes itself on the walls of the mold to produce pipe within a few seconds.

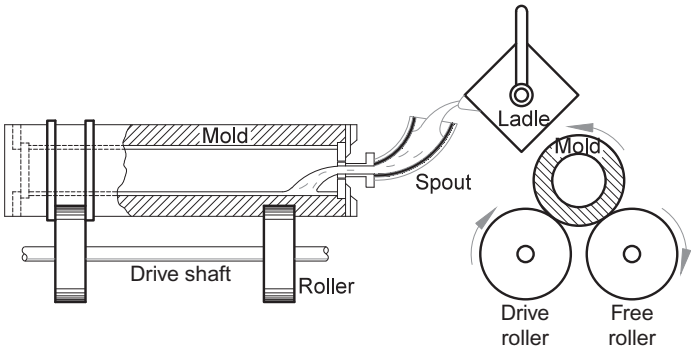

Figure 3.4 Centrifugal casting.

3.2.4 Ductile iron

Ductile iron replaced cast iron pipe in pressure applications. The metallographic structure of ductile iron is such that the graphite exists in the form of nodules. These compact nodules do not interrupt the metallurgical matrix like the graphite flakes in cast iron. The result is a material that is stronger and tougher than cast iron. Ductile iron pipe is available in five pressure classes, defined as the rated working pressure of the pipe, based on a minimum yield strength of 42,000 psi and a 2.0 safety factor that is applied to the working pressure plus a surge pressure of 100 psi.

3.2.4.1 Applications

Ductile iron, like cast iron, is used for sewage service. It is also used for potable water service.

3.2.4.2 Manufacturing processes

Ductile iron pipe is manufactured in the same way as cast iron pipe.

3.3 Nonferrous metal piping

Tube and pipe made from copper, brass, titanium, and aluminum alloys can be readily obtained. These materials are relatively expensive and are selected usually because either of their particular corrosion resistance to the process chemical, of their good heat transfer, or of their tensile strength at high temperatures.

Copper-nickel alloys (mainly Cu-Ni 90-10) are another kind of nonsteel pipe used in the oil and gas and petrochemical industries. They are used in seawater networks particularly for sizes less than or equal to 1 1/2 in. In recent years, they are being replaced by fiberglass pipe except in the ½-1½-in. range as fiberglass pipe is not available in these sizes.

3.4 Plastic pipe

3.4.1 General considerations

Pipes made from plastics are receiving increasing usage. The reasons for this are that it resists corrosion, alleviates the problem of paraffin and scale buildup, and is less resistant to flow that allows the use of smaller diameter pipe or less hydraulic horsepower. On the other hand, it may rupture or fail if subjected to heat or flame impingement.

Plastics are used in the following three ways:

- As all-plastic pipe
- As "filed" plastic materials (glass-fiber-reinforced, carbon-filled, etc.)
- As lining or coating materials

3.4.2 Types of plastic pipe

3.4.2.1 Polyvinyl chloride

Polyvinyl chloride (PVC) is the most widely used material for plastic piping. It is used for pressure piping and plumbing drainage. It is widely available and relatively inexpensive. It is used to handle acids, bases, salts, and other corrosives and may be damaged by ketones, aromatics, and certain chlorinated hydrocarbons. Design stress is 2000 psi; maximum service temperature is 150 °F (73.4 °F).

3.4.2.1.1 Application

PVC is widely used for cold-water pressure piping and potable water service. PVC is not suitable for hot water, since it has a maximum temperature limit of only 140 °F (60 °C). Being a thermoplastic, the strength drops off quickly as the temperature rises above ambient and the working pressure must be derated for temperatures above 73 °F (23 °C; see Table 3.6). PVC is never to be used for compressed gases, nor is it to be tested with gases under pressure. PVC should be painted with latex paint if it is to be exposed to sunlight. If it is stored outdoors, it should be covered with a tarp.

Table 3.6 PVC pipe temperature derating factors

Operating temp		Derating factor
(°F)	(°C)	
73	23	1.00
80	27	0.88
90	32	0.75
100	38	0.62
110	43	0.51
120	49	0.40
130	54	0.31
140	60	0.22

3.4.2.1.2 Manufacturing processes

PVC is produced from vinyl chloride monomer that is reacted to form polymer chains. The plastic is extruded through dies into pipe of the required and wall thickness. Depending on the method used to join the pipe in the field, the pipe may be made with bell-and-spigot ends or with plain ends suitable for solvent welding, mechanical joints, or threading. Threaded connections are not recommended for temperatures above 110 °F (43 °C). PVC wall thicknesses are available in Schedules 40, 80, and 120, as well as in "Dimension Ratios (DR)." DR, sometimes called standard dimension ratio (SDR), is the ratio of the OD of the pipe to the wall thickness and is inversely proportional to the working pressures (see Table 3.7).

Table 3.7 PVC dimension ratios

SDR	Working pressure (psi)	Nominal pipe size (in.)	OD (in.)	Average ID (in.)	Min. wall (in.)	Nominal (wt/ft. lb/ft.)
13.5	315	1/2	0.840	0.696	0.062	0.110
21	200	3/4	1.050	0.910	0.060	0.136
21	200	1	1.315	1.169	0.063	0.180
21	200	1-1/4	1.660	1.482	0.079	0.278
21	200	1-1/2	1.900	1.700	0.090	0.358
21	200	2	2.375	2.129	0.113	0.550
21	200	2-1/2	2.875	2.581	0.137	0.797
21	200	3	3.500	3.146	0.167	1.168
21	200	3-1/2	4.000	3.597	0.190	1.520
21	200	4	4.500	4.046	0.214	1.927
21	200	5	5.563	5.001	0.265	2.948
21	200	6	6.625	5.955	0.316	4.185
21	200	8	8.625	7.756	0.410	7.069
26	160	1	1.315	1.175	0.060	0.173
26	160	1-1/4	1.660	1.512	0.064	0.233
26	160	1-1/2	1.900	1.734	0.073	0.300
26	160	2	2.375	2.173	0.091	0.456
26	160	2-1/2	2.875	2.635	0.110	0.657
26	160	3	3.500	3.210	0.135	0.966
26	160	3-1/2	4.000	3.672	0.154	1.250
26	160	4	4.500	4.134	0.173	1.569
26	160	5	5.563	5.108	0.214	2.411
26	160	6	6.625	6.084	0.255	3.414
26	160	8	8.625	7.921	0.332	5.784
26	160	10	10.750	9.874	0.413	8.971
26	160	12	12.750	11.711	0.490	12.620
26	160	14	14.000	12.860	0.538	15.205
26	160	16	16.000	14.696	0.615	19.877
26	160	18	18.000	16.533	0.692	25.156

Continued

Table 3.7 Continued

SDR	Working pressure (psi)	Nominal pipe size (in.)	OD (in.)	Average ID (in.)	Min. wall (in.)	Nominal (wt/ft. lb/ft.)
26	160	20	20.000	18.370	0.769	31.057
26	160	24	24.000	22.043	0.923	44.744
41	100	18	18.000	17.061	0.439	16.348
41	100	20	20.000	18.956	0.488	20.196
41	100	24	24.000	22.748	0.585	29.064

3.4.2.2 Chlorinated polyvinyl chloride

Chlorinated polyvinyl chloride (CPVC) is a thermoplastic, similar to PVC, that is manufactured from the same resin as PVC but undergoes an additional reaction in which chloride replaces some of the hydrogen in the monomer. This reaction yields a chlorine content between 63 and 69 wt.% compared to PVC with a 57 wt.%. The result is a higher temperature at which CPVC softens that allows CPVC pipe to be used at temperatures up to 200 °F (93 °C; see Table 3.8). Like PVC, CPVC must never be used in compressed gas service and should not be installed outdoors without protection from ultraviolet exposure.

Table 3.8 CPVC pipe temperature derating factors

Operating temp		Derating factor
(°F)	(°C)	
73	23	1.00
80	27	1.00
90	32	0.91
100	38	0.82
110	43	0.77
120	49	0.65
130	54	0.62
140	60	0.50
150	66	0.47
160	71	0.40
170	77	0.32
180	82	0.25
200	93	0.20

Factors for derating CPVC due to temperature.

3.4.2.2.1 Applications

Since CPVC offers higher strength at elevated temperatures than PVC, it is used in hot- and potable cold-water service in buildings. In addition, it is also used to handle corrosive fluids. CPVC can support temperatures up to 200 °F (93 °C).

3.4.2.2.2 Manufacturing processes

CPVC pipe is extruded from resins in the same manner as PVC pipe. It is available in Schedules 40 and 80 as well as in SDR in sizes ¼ in. through 12 in. CPVC is usually cream-colored but may also be gray and white.

3.4.2.3 Polyethylene

Polyethylene (PE) is a polymer thermoplastic that may be used in underground applications. It belongs to a class of polymers know as polyolefins. PE can tolerate abuse and may be deformed without losing its strength. The design stress is 630 psi at 73.4 °F (23 °C) and the maximum service temperature is 180 °F (82 °C).

3.4.2.3.1 Applications

PE is used to transport water or low-pressure gas. It does not corrode and offers very good flow characteristics since the surfaces are smooth. Its resistance to corrosion makes it a more economical choice for underground piping than coated and wrapped carbon steel.

3.4.2.3.2 Manufacturing processes

PE resin is extruded into pipe diameters ranging from ½ to 63 in. in diameter. It is often pigmented solid black but may be coextruded with other colors as stripes to denote specific services. The wall thickness is determined using the "dimension ratio" that divides the diameter by the wall thickness. This provides a ratio that is based on an allowable working pressure for all of the diameters in a given DR.

3.4.2.4 Polypropylene

Polypropylene (PP) is a polymer thermoplastic, similar to polyethylene. Like polyethylene, it belongs to a class of polymers know as polyolefins. PE can tolerate abuse and may be deformed without losing its strength.

3.4.2.4.1 Applications

Polypropylene is used where resistance to sulfur-bearing compounds is useful, such as saltwater disposal lines, low-pressure gas gathering systems, and crude oil flow piping. The design stress is 630 psi at 73.4 °F (23 °C) and the maximum service temperature is 210 °F.

3.4.2.4.2 Manufacturing processes

The manufacturing processes are the same as those of polyethylene.

3.4.2.5 Reinforced thermosetting resin pipe

Reinforced thermosetting resin pipe (RTRP) is a composite material with wide use due to its chemical resistance and strength. Unlike thermoplastic pipe that is manufactured by extruding the plastic through a die that is designed for the diameter and wall thickness desired, RTRP has a fixed shape once cured and the shape cannot be changed. The resins are thermosetting epoxy or polyester and the glass fibers are embedded within these resins to impart mechanical strength. The orientation of the fibers and the resin blend can be manipulated to obtain the designed quality for the specific application.

3.4.2.5.1 Applications

Fiberglass-RTRP is the most widely used plastic pipe used in upstream oil and gas facilities. RTRP is used to transport chemicals in liquid and vapor phases. It is frequently used in upstream oil and gas installations both above- and belowground. The maximum design stress levels range from 4000 to 6300 psi, depending on the grade. The maximum temperature rating is 200-300 °F, depending on the type of resin binder used. RTRP diameters range from 1 in. (25 mm) to 108 in.; Table 3.9 summarizes the pressures and temperatures discussed. Since the technology of plastic pipe manufacturing is advancing rapidly, it is recommended that the designer verify the pipe characteristics with the manufacturer before purchasing plastic pipe. RTRP pipes are often called by their commercial names, for example, Bondstrand (Ameron). Bondstrand pipe is easily recognizable by the characteristic "black" color.

3.4.2.5.2 Manufacturing processes

Manufactured by winding resin-impregnated glass fibers in cross-angle layers around a steel mandrel, this process is accomplished one of two ways: A series of rotating heads wind the glass filament around a nonrotating mandrel and a nonrotating head moves longitudinally along a rotating mandrel. Epoxy, vinyl-epoxy, and polyester resin systems are used. Curing the resin after application to obtain a thorough bond with the fibers is a key step. Curing is accomplished after the resin-impregnated glass fibers are wound by circulating steam through the hollow forming mandrel or by heating the pipe in a gas-fired heater or oven.

Table 3.9 Plastic pipe design properties

Material	Design stress (psi) at 73.4 °F	Temperature rating (°F)
PVC	1000 to 2000[a]	0 to 150[a]
CPVC	2000[a]	0 to 120[a]
Polypropylene	630[a]	30 to 210[a]
Polyethylene	400 to 630[a]	−30 to 180[a]
Fiberglass	4000 to 6300[b]	−20 to 200-300[a]

[a]See Table 1, Appendix B, ASME B31.3.
[b]Cyclic pressure, 150×10^6 cycles. See Tables 2 and 3, Appendix B, ASME B31. 3.

3.4.2.5.3 Joining methods

The major limiting factor controlling the use of RTRP is the joining method. The two methods used are glues and mechanical means, that is, threads. Glues are the least expensive and most commonly used method. Tapered bell-and-spigot pipe ends are glued together with epoxy cement. Epoxy cement effectiveness is governed by temperature, setting time, and the way it is applied. Eight-round form threads either out or molded directly onto upset pipe ends or molded and cemented to the pipe ends are also commonly used. This method is preferred for most oil and gas installations, especially when the operating pressure exceeds 200 psi.

3.5 Insulating materials

3.5.1 Mineral wool

Mineral wool insulation is suitable for temperatures up to 1200 °F (649 °C). It is made from basalt rock and steel slag with an organic binder. The binder requires that a heat-up schedule be maintained for temperatures above 450 °F (232 °C). During the heat-up phase, some of the resin will begin a controlled decomposition that requires adequate ventilation to vent the vapors. Mineral wool is water-repellant, yet vapor-permeable, and can be used outdoors. A metal jacket is recommended to protect the insulation from physical damage as well as weatherproofing. The insulation is cut with a knife and wired to the pipe. Mineral wool has a thermal conductivity of 0.25 BTU-in./h-ft.^{2}-°R (0.035 W/mK) at 100 °F (24 °C) and a density of 4.4 lb/ft.^{3} (70 kg/m^3).

3.5.2 Calcium silicate

Calcium silicate is a lightweight, porous, chalky insulation suitable for temperatures up to 1200 °F (649 °C). It is cut with a handsaw and wired to the pipe. It is available in preformed shapes to fit pipes and a variety of fittings and is then covered with an aluminum metal jacket. It has a thermal conductivity of 0.50 BTU-in./h-ft.^{2}-°R (0.072 W/mK) at 400 °F (204 °C) and a density of 14.5 lb/ft.^{3} (232 kg/m^3). Calcium silicate loses its insulating properties when it gets wet so it must be protected from moisture. A lightweight insulating cement should be used over any gaps between fittings.

3.5.3 Fiberglass

Preformed fiberglass pipe insulation is suitable for temperatures from −50 to 250 °F (−46 to 121 °C) and has a thermal conductivity of 0.30 BTU-in./h-ft.^{2}-°R (0.04 W/mK). It is available in sizes up to 34 in. It is also available with a factory-installed jacket bonded to aluminum foil and reinforced with a fiberglass scrim. The jacket serves as a vapor barrier and a barrier to physical damage. The pieces

are cut with a knife and taped together. Fiberglass is a good choice for dry locations, but if it becomes wet, it must be replaced.

3.5.4 Cellular glass

Cellular glass insulation is suitable for temperatures from −450 to 900 °F (−268 to 482 °C). It is a closed-cell material that makes it an excellent choice for locations subject to moisture. It is impermeable to liquids and it does not burn. It may also be used for underground applications and is available in a wide range of preformed shapes. It has a thermal conductivity of 0.29 BTU-in./h-ft.^{2}-°R (90.039 W/mK) at 75 °F (24 °C) and a density of 3-6 lb/ft.^{3} (932.8 kg/m^3).

3.5.5 Foam synthetic rubber

Preformed foam synthetic rubber insulation is suitable for temperatures between −297 and 220 °F (−183 to 105 °C). It is available in sizes up to 6 in. in NPS. It is used primarily for plumbing applications. It is used to prevent condensation on cold service pipe. It is slipped over or slit and wrapped around the pipe. Butt joints and seams are sealed with a special adhesive. It has a thermal conductivity of 0.27 BTU-in./h-ft.^{2}-°R (0.039 W/mK) at 75 °F (24 °C) and a density of 3-6 lb/ft.^{3} (48-96 kg/m^3).

3.5.6 Extruded polystyrene

Extruded polystyrene is a rigid thermoplastic foam insulation suitable for temperatures in the range of −297 to 165 °F (−183 to 74 °C). It is used for cold lines to prevent surface condensation. It degrades when exposed to sunlight and thus must be covered. It has a thermal conductivity of 0.259 BTU-in./h-ft.^{2}-°R (0.037 W/mK) at 75 °F (24 °C) and a density of 1.6 lb/ft.^{3} (26 kg/m^3).

3.6 Overview of ASME B31 Code requirements

3.6.1 Background

Material selection for a given service is not covered by the piping code. Chapter III of ASME B31.3, §323.5 states in part "Selection of materials to resist deterioration in service is not within the scope of the Code." It is impossible for the code to provide guidance to the unlimited process applications covered by the piping code. *ASME B31.3* only lists materials that are commonly used. *Table 326.1* lists materials permitted for components and are included in the allowable stress tables. The designer is not prevented from using materials at temperatures for which allowable stresses are not listed in *ASME B31.3 Code. Chapter III* provides rules for qualification of unlisted materials and for use of materials outside of the temperature limits for which allowable stresses are provided.

ASME B31.3 identifies materials by using the appropriate ASTM designations, for example, A106 instead of the *ASME Boiler and Pressure Vessel Code (BPVC)* designation, for example, SA106. The "SA" (ferrous) and "SB" (nonferrous) designation identifies the material as being ASME BPVC material. ASME BPVC-listed materials meet the specifications of *ASME Section II, Part B*. The "SA" and "SB" materials correspond to the ASTM specification designations and can be used interchangeably in piping systems. Chapter III of ASME B31.3 provides detailed rules covering notch toughness requirements for materials and exemptions from impact testing along with specific limitations for some materials, for example, ductile iron.

3.6.2 Allowable stress tables

Appendix A, Table A-1, of B31.3 lists the allowable stresses for use with the metallic materials, other than bolting, and Table A-2 lists the allowable stresses for bolting. Table 3.10 is a typical page of allowable stress values from Code Table A-1. Materials in Code Table A-1 are grouped by alloy content. The alloy groups are iron, carbon steel, low and intermediate alloys, stainless steel, copper and copper alloys, nickel and nickel alloys, titanium and titanium alloys, zirconium and zirconium alloys, and aluminum alloys. Each alloy group is separated into pipes and tubes, plates and sheets, forgings and fittings, bar, and castings.

In addition to material being grouped by alloy content and specification number, additional information is provided, for example, P-number or S-number, specified minimum tensile and yield strengths. As shown in Code Table A-1 of the B31.3 (Table 3.10), the numbers listed in the third column are P-numbers unless a number is preceded by an "S," in which case it is the S-number. The specified minimum tensile and yield strengths are from the material specifications.

The ASME BPVC, Section IX, assigns P-numbers that group alloys for weld procedure qualification purposes, based on composition, mechanical properties, and weldability. The S-numbers are similar to P-numbers in other respects (refer to §328.2.1(f)). As shown in Table 3.10, column 5, numbers in parentheses refer to notes for Appendix A Tables. The designer should review the notes prior to using a material. Notes (4) through (7) provide specific guidance on features of the allowable stress tables. For example, refer to Code Table A-1 (refer to Table 3.10) a single vertical bar is a "warning" indicating that use of material at the designated temperature is affected by a referenced note. If the bar is to the left of the table entry, it affects the use of the material at a temperature below that of the entry. If the bar is to the right of the table entry, it affects the use of the material above that of the entry. On the other hand, double bars prohibit the use of the material below or above some temperature. When the double bars are adjacent to a stress value in the table, the code prohibits the use of the material above the corresponding temperature or above some lower temperature. The placement to the left or right of the table entry has the same meaning as with a single bar. A note indicates the specific temperature limitation. When the double bars are to the left of the "minimum temperature" column, they prohibit the use of the material below the minimum temperature. Double bars follow requirements that are shown elsewhere in the code; they do not add prohibitions that are not listed

Table 3.10 Basic allowable stresses in tension for metals (ASME B31.3, Table A-1) (1 of 4)

DOES NOT INCLUDE QUALITY FACTORS

BASIC ALLOWABLE STRESSES IN TENSION FOR METALS[1]

Numbers in Parentheses Refer to Notes for Appendix A Tables; Specifications are A STM Unless Otherwise Indicated

Material	Spec. no.	P-No. or S-No. (5)	Grade	Notes	Min. temp., °F (6)	Specified min. strength, ksi Tensile	Specified min. strength, ksi Yield	Min. temp. to 100	200	300
Carbon Steel (Cont'd)										
Pipes and Tubes (2) (Cont'd)										
…	A 53	1	B	(57)(59)						
…	A 106	1	B	(57)	B					
…	A 333									
…	A 334	1	6	(57)	-50	60	35	20.0	20.0	20.0
…	A 369	1	FPB	(57)	-20					
…	A 381	S-1	Y35	…	A					
…	API 5L	S-1	B	(57)(59)(77)	B					
…	A 139	S-1	C	(8b)	A	60	42			
…	A 139	S-1	D	(8b)	A	60	46	20.0	20.0	20.0
…	API 5L	S-1	X42	(55)(77)	A	60	42	20.0	20.0	20.0
…	A 381	S-1	Y42	…	A	60	42	20.0	20.0	20.0
…	A 381	S-1	Y48	…	A	62	48	20.6	19.7	18.7
…	API 5L	S-1	X46	(55)(77)	A	63	46	21.0	21.0	21.0
…	A 381	S-1	Y46	…	A	63	46	21.0	21.0	21.0

…	A 381	S-1	Y50	…	A	64	50	21.3	20.3	19.3
A 516 Gr. 65	A 671	1	CC65	(57)(67)	B	65	35	21.7	21.3	20.7
A 515 Gr. 65	A 671	1	CB65							
A 515 Gr. 65	A 672	1	B65	(57)(67)	A	65	35	21.7	21.3	20.7
A 516 Gr. 65	A 672	1	C65	(57)(67)	B					
…	A 139	S-1	E	(8b)	A	66	52	22.0	22.0	22.0
…	API 5L	S-1	X52	(55)(77)	A	66	52	22.0	22.0	22.0
…	A 381	S-1	Y52	…	A	66	52	22.0	22.0	22.0
A 516 Gr. 70	A 671	1	CC70	(57)(67)	B	70	38	23.3	23.1	22.5
A 515 Gr. 70	A 671	1	CB70							
A 515 Gr. 70	A 672	1	B70	(57)(67)	A	70	38	23.3	23.1	22.5
A 516 Gr. 70	A 672	1	C70	(57)(67)	B					
…	A 106	1	C	(57)	B	70	40	23.3	23.3	23.3
A 537 Cl. 1 (≤ 2½ in. thick)	A 671	1	CD70							
A 537 Cl. 1 (≤ 2½ in. thick)	A 672	1	D70	(67)	D	70	50	23.3	23.3	22.9
A 537 Cl. 1 (≤ 2½ in. thick)	A 691	1	CMSH70							
…	API 5L	S-1	X56	(51)(55)(71)(77)	A	71	56	23.7	23.7	23.7
…	A 381	S-1	Y56	(51)(55)(71)	A	71	56	23.7	23.7	23.7

READ THESE !!!

DESIGN MIN TEMP. NORMALLY OK W/O IMPACT TESTING

elsewhere. As an example, double bars are used for materials that are only permitted for use in Category D Fluid Service. The reason for this is because the definition of Category D Fluid Service requires that the design temperature be between −20 °F (−29 °C) and 366 °F (186 °C).

For materials that are allowed to exceed 2/3 of the specified minimum yield strength at temperature, Table A-1 indicates where the values exceed this. Allowable stress values shown in *italics* exceed 2/3 of the specified minimum yield strength but are less than 90% of the expected minimum yield strength at temperature. Values shown in bold are at 90% of the expected minimum specified yield strength at temperature. The designer is allowed to interpolate linearly between temperatures for which allowable stresses are shown. The use of materials above the maximum temperature for which allowable stresses are provided is allowed as long as it is not specifically prohibited by double bars.

3.6.3 High-temperature service

ASME B31.3 allows the use of materials above the highest temperature for which allowable stresses are listed in Appendix A. The code allows the use of materials above the highest temperature allowed in listed standards. For example, ASME B16.5 limits the use of Type 304L stainless steel flanges to temperatures at or below 800 °F (427 °C). ASME B31.3 does not prohibit their use at higher temperatures. For example, Type 304L flanges can be used satisfactorily at temperatures higher than 1500 °F (815 °C) if properly designed/rated. Code §302.2.1 makes the owner responsible for the extension of pressure-temperature ratings of a component beyond the ratings listed in the standard. It's the designer's responsibility to determine the serviceability of the material and the allowable stresses. The allowable stresses are determined the same way as for unlisted materials.

3.6.4 Temperature service

The tables in B31.3, Appendix A, show the allowable stress under the column labeled "Minimum Temperature" to 100 °F (38 °C). This does not mean the material is limited to temperatures above the minimum temperature either directly or by reference to Figure 323.3.2A (refer to Figure 3.10). The minimum temperature is the "breakpoint" in impact-test requirements. If a material is used below the minimum temperature, the same allowable stresses are used as are provided under the column "Minimum Temperature" under 100 °F (38 °C). Even though materials typically become stronger as the temperature is decreased, the designer is not allowed to take credit.

3.6.5 Impact test requirements

ASME B31.3 Code requires impact testing when there is a risk of brittle fracture. The risk is due to the combination of material condition, thickness, toughness, and stress. Code Table 323.2.2 (refer to Table 3.11) lists the requirements for impact testing for

Table 3.11 Basic allowable stresses in tension for metals (ASME B31.3, Table A-1) (2 of 4)

SINGLE BAR: CAUTION RE USE ABOVE THIS TEMPERATURE—SEE NOTE

DOUBLE BAR: DO NOT USE ABOVE THIS TEMPERATURE (366°F PER NOTE)

Basic allowable stress *S*, ksi (1), at metal temperature, °F (7)														
400	500	600	650	700	750	800	850	900	950	1000	1050	1100	Grade	Spec. No.
													Carbon Steel (Cont'd)	
													Pipes and Tubes (2) (Cont'd)	
													B	A 53
													B	A 106
													6	A 333
20.0	18.9	17.3	17.0	16.5	13.0	10.8	8.7	6.5	4.5	2.5	1.6	1.0	6	A 334
													FPB	A 369
													Y35	A 381
													B	API 5L
													C	A 139
...	...	...	...	...	...	...	...	...	...	...	...	...	D	A 139
20.0	...	...	...	...	...	...	...	...	...	...	...	...	X42	API 5L
20.0	...	...	...	...	...	...	...	...	...	...	...	...	Y42	A 381
17.8	16.9	16.0	15.5	...	...	...	...	...	...	...	...	...	Y48	A 381
21.0	...	...	...	...	...	...	...	...	...	...	...	...	X46	API 5L
21.0	...	...	...	...	...	...	...	...	...	...	...	...	Y46	A 381
18.4	17.4	16.5	16.0	...	...	...	...	...	...	...	...	...	Y50	A 381
20.0	18.9	17.3	17.0	16.8	13.9	11.4	9.0	6.5	4.5	2.5	...	...	CC65	A 671
													CB65	A 671
20.0	18.9	17.3	17.0	16.8	13.9	11.4	9.0	6.5	4.5	2.5	1.6	1.0	B65	A 672
													C65	A 672
...	...	...	...	...	...	...	...	...	...	...	...	...	E	A 139
22.0	...	...	...	...	...	...	...	...	...	...	...	...	X52	API 5L
22.0	...	...	...	...	...	...	...	...	...	...	...	...	Y52	A 381
21.7	20.5	18.7	18.4	18.3	14.8	12.0	9.3	6.5	4.5	2.5	...	...	CC70	A 671
21.7	20.5	18.7	18.4	18.3	14.8	12.0	9.3	6.5	4.5	2.5	1.6	1.0	CB70	A 671
22.9	21.6	19.7	19.4	19.2	14.8	12.0	...	...	...	...	...	...	B70	A 672
													C70	A 672
													C	A 106
													CD70	A 671
22.9	22.9	22.6	22.0	21.4	...	...	...	...	...	...	...	...	D70	A 672
													CMSH70	A 691
23.7	...	...	...	...	...	...	...	...	...	...	...	...	X56	API 5L
23.7	...	...	...	...	...	...	...	...	...	...	...	...	Y56	A 381

various materials. Column A lists requirements when the design minimum temperature is at or above the minimum temperature listed in Code Table A-1 (Table 3.10) or Code Figure 323.2.2A (Figure 3.5). These are temperatures are at which the likelihood of brittle fracture is considered to be less. Column B provides requirements for when the design minimum temperature is below the minimum temperature in Code Table A-1 (Figure Table 3.5) or Code Figure 323.2.2A (Figure 3.5).

By definition, Category D Fluid Service must be greater than −20 °F (−29 °C) and no impact testing is required for materials used in piping in this category. Carbon

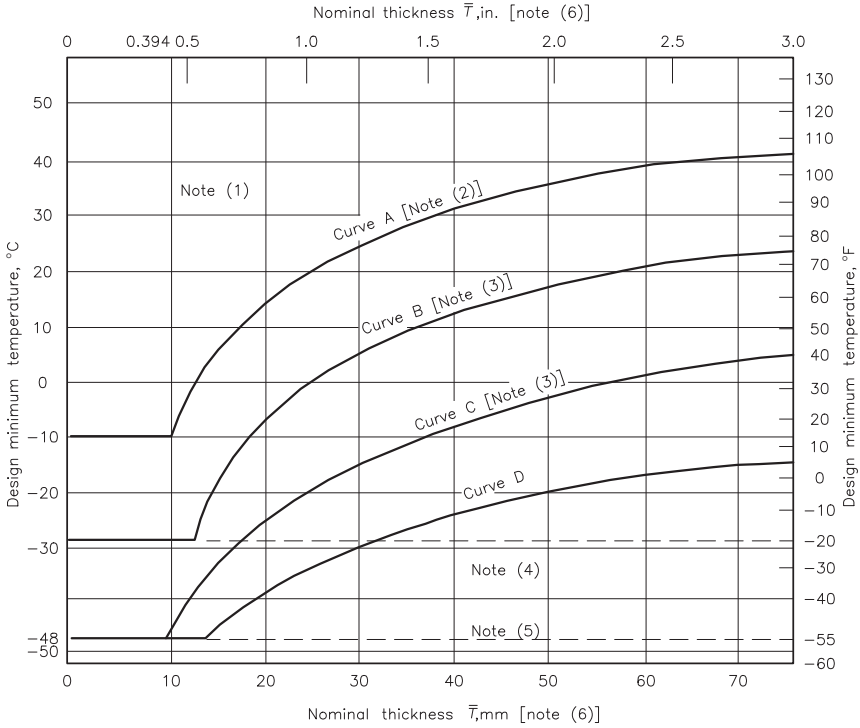

Notes:
(1) Any carbon steel material may be used to a minimum temperature of −29°C (−20°F) for Category D Fluid Service.
(2) X Grades of API 5L, and ASTM A 381 materials, may be used in accordance with Curve B if normalized or quenched and tempered.
(3) The following materials may be used in accordance with Curve D if normalized:
(a) ASTM A 516 Plate, all grades;
(b) ASTM A 671 Pipe, Grades CE55, CE60, and all grades made with A 516 plate;
(c) ASTM A 672 Pipe, Grades E55, E60, and all grades made with A 516 plate.
(4) A welding procedure for the manufacture of pipe or components shall include impact testing of welds and HAZ for any design minimum temperature below −29 °C (−20°F), except as provided in Table 323.2.2, A−3(b).
(5) Impact testing in accordance with para. 323.3 is required for any design minimum temperature below −48 °C (−55 °F) except as permitted by Note (3) in Table 323.2.2.
(6) For blind flanges and blanks, T̄ shall be 1/4 of the flange thickness.

Figure 3.5 Minimum temperature without impact testing for carbon steel materials (ASME B31.3, figure 323.2.2A). See ASME B31.3, Table A-1, for designated curve for a listed material.

steel is limited to Category D Fluid service and thus does not need to be impact-tested. Thus, the minimum temperatures listed in the allowable stress tables are for materials other than carbon steels. Code Figure 323.2.2A (Figure 3.5) is similar to the curve of ASME BPVC, Section VIII, Division 1. The primary differences are that it provides more detailed treatment of piping materials and curve B, which covers many common carbon steel piping materials, was shifted so that the minimum temperature was −20 °F (−29 °C) through ½ in. (13 mm) wall thickness (Tables 3.12–3.13).

The design minimum temperature, shown in Code Figure 323.2.2A (Figure 3.5) is the minimum temperature that the metal can experience during service. When the design minimum temperature is below the minimum temperature shown in the code, impact testing is required. This requires using impact-test-qualified weld procedures and impact-tested materials shown in Code Table 323.3.1. When the temperature is at or above the minimum temperature shown in the code, there are different requirements listed for the base material, for example, column A(a) Table 323.2.2A (Table 3.10) and the weld metal and heat-affected zone as shown in column A(b). When impact testing is required for the weld metal, this is satisfied by impact testing done as part of the weld procedure qualification testing (refer to Note (2)).

Code Figure 323.2.2B (Figure 3.6) similar to ASME BPVC, Section VIII, Division 2, Figure AM 218.3, provides a reduction in the minimum temperature, without impact testing, for carbon steel material when the stress in the piping is less than the maximum allowable stress. Division 2 curve is used because it is consistent with ASME B31.3 allowable stress, for example, 1/3 of tensile strength. For minimum design metal temperature of −55 °F (−48 °C) and above, the temperature reduction provided in Code Figure 323.2.2B (Figure 3.6) may be applied to the minimum permissible temperature. For minimum design metal temperatures below −55 °F (−48 °C) and at or above −155 °F (−104 °C), carbon steel is permitted if the stress ratio defined in general note (a) of Code Figure 323.2.2B (Figure 3.6) is 0.3 or less. Per Code Table 323.2.2 (Figure 3.6), note (3) this exemption also applies from −20 °F (−29 °C) to −155 °F (−104 °C) for austenitic stainless steel, intermediate-alloy steels, high-alloy ferritic steels, and duplex stainless steels.

The stress ratio must consider both hoop-type and longitudinal stresses. The stress ratio is the maximum of the following:

- Nominal pressure stress, based on minimum pipe wall thickness less allowances, divided by "S" at the design minimum temperature.
- For piping components with pressure ratings, the pressure for the condition under consideration divided by the pressure rating at the design minimum temperature.
- Combined longitudinal stress due to pressure, dead weight, and displacement strain (stress intensification factors are not included in this calculation) divided by "S" at the design minimum temperature. When calculating longitudinal stress, the forces and moments shall be calculated using nominal dimensions less corrosion, erosion, and mechanical allowances.

The calculated stress, which is compared to the allowable stress at the design minimum temperature, is calculated for the loads that are present at the condition being

Table 3.12 Basic allowable stresses in tension for metals (ASME B31.3, Table A-1) (3 of 4)

ITALIC : STRESS EXCEEDS 2/3

BOLD : STRESS = 90% Sy

Material	Spec. no.	P-No. or S-No. (5)	Grade	Notes	Min. temp., °F(6)	Specified min. strength, ksi Tensile	Yield	Min. temp. to 100	200	300	400	500	600
Stainless Steel (3) (4) (Con'd)													
Pipes and Tubes (2) (Cont'd)													
18Cr-8Ni pipe	A 430	8	FP304	(26)(31)(36)	-425								
18Cr-8Ni pipe	A 430	8	FP304H	(26)(31)(36)	-325	70							
18Cr-8Ni tube	A 269	8	TP304	(14)(26)(28)(31)(36)	-425								
18Cr-8Ni pipe	A 312	8	TP304	(26)(28)	-425								
Type 304 A 240	A 358	8	304	(26)(28)(31)(36)	-425	75	30	20	20	20	18.7	17.5	16.4
18Cr-8Ni pipe	A 376	8	TP304	(20)(26)(28)(31)(36)	-425								
18Cr-8Ni pipe	A 376	8	TP304H	(26)(31)(36)	-325								
18Cr-8Ni pipe	A 409	8	TP304	(26)(28)(31)(36)	-425								
18Cr-8Ni pipe	A 312	8	TP304H	(26)	-325	75	30	20	20	20	18.7	17.5	16.4
18Cr-8Ni	A 452	8	TP304H	(26)	-325	75	30	20	20	20	18.7	17.4	16.5
18Cr-10Ni-Mo	A 451	8	CPF8M	(26)128)	-425	70	30	20	20	20	19.4	18.1	17.1
18Cr-10Ni-Cb	A 452	8	TP347H	…	-325	75	30	20	20	20	20	19.9	19.3
20Cr-Cu tube	A 268	10	TP443										
27Cr tube	A 268	101	TP446	(35)	-20	70	40	23.3	23.3	21.4	20.4	19.4	18.4
25-10Ni-N	A 451	8	CPE20N	(35)(39)	-325	80	40	26.7	26.2	24.9	23.3	22	21.4
23Cr-4Ni-N	A 789												
23Cr-4Ni-N	A 790	10H	S32304	(25)	-60	87	58	29	27.9	26.3	25.3	24.9	24.5
12¾.Cr	A 426	6	CPCA-15	(10)(35)	-20	90	65	30	…	…	…	…	…

22Cr-5Ni-3Mo	A 789												
22Cr-5Ni-3Mo	A 790	10H	S31803	(25)	-60	90	65	30	30	28.9	27.9	27.2	26.9
26Cr-4Ni-Mo	A 789												
26Cr-4Ni-Mo	A 790	10H	S32900	(25)	-20	90	70	30	…	…	…	…	…
25Cr-8Ni-3Mo-W-Cu-N	A 789												
25Cr-8Ni-3Mo-W-Cu-N	A 790	S-10H	S32760	(25)	-60	109	80	36.3	34.4	34	34	34	…
25Cr-7Ni-4Mo-N	A 789												
25Cr-7Ni-4Mo-N	A 790	10H	S32750	(25)	-20	116	80	38.7	35	33.1	31.9	31.4	31.2
Plates and Sheets			THE BAR HERE MEANS A NOTE AFFECTS MIN TEMP.										
18Cr-10Ni	A 240	8	305	(26)(36)(39)	-325	70	25	16.7	…	…	…	…	…
12Cr-Al	A 240	7	405	(35)	-20	60	25	16.7	15.3	14.8	14.5	14.3	14
18Cr-8Ni	A 240	8	304L	(36)	-425	70	25	16.7	16.7	16.7	15.6	14.8	14
16Cr-12Ni-2Mo	A 240	8	316L	(36)	-425	70	25	16.7	16.7	16.7	16.7	15.5	14.4
18Cr-Ti-Al	A 240		X8M	(35)	-20	65	30	20	…	…	…	…	…
18Cr-8Ni	A 167	S-8	3028	(26)(28)(31)(36)(39)	-325	75	30	20	20	20	18.7	17.4	16.4
18Cr-Ni	A 240	8	302	(26)(36)	-325	75	30	20	20	20	18.7	17.4	16.4

Table 3.13 Basic allowable stresses in tension for metals (ASME B31.3, Table A-1) (4 of 4)

ITALIC : STRESS EXCEED 2/3 Sy

BOLD : STRESS = 90 Sy

USE OF MATERIAL AT A TEMP ABOVE THE BAR IS AFFECTED BY A NOTE

Basic allowable stress S, ksl (1), at metal temperature, °F (7)																		Grade	Spec. No.
650	700	750	800	850	900	950	1000	1050	1100	1150	1200	1250	1300	1350	1400	1450	1500		
																		Stainless steel (3) (4) (Cont'd) Pipe and Tube (2) (Cont'd)	
																		FP304H	
																		FP304H	
																		TP304	
																		TP304	
16.2	16.0	15.6	15.2	14.9	14.6	14.4	13.8	*12.2*	9.7	7.7	6.0	4.7	3.7	2.9	2.3	1.8	1.4	304	A 358
																		TP304	A 376
																		TP304H	A 376
																		TP304	A 409
16.2	16.0	15.6	15.2	14.9	14.6	14.4	*13.8*	*12.2*	9.7	7.7	6.0	4.7	3.7	2.9	2.3	1.8	1.4	TP304H	A 312
16.2	15.9	15.5	15.1	14.9	14.6	14.3	*13.8*	*12.2*	9.8	7.6	6.0	4.7	3.6	2.8	2.2	1.8	1.4	TP304H	A 452
16.7	16.2	15.8	15.5	14.7	*14.4*	*14.0*	*13.4* 1	11.4	9.3	8.0	6.8	5.3	4.0	3.0	2.3	1.9	1.4	CPF8M	A 451
18.9	18.6	18.5	18.2	18.1	18.1	18.1	18.0	*17.7*	*14.2*	10.5	7.9	5.9	4.3	3.2	2.5	1.8	1.4	TP347H	A 452
																		TP443	A 268
18.0	17.5	16.9	16.2	15.1	13.0	6.9	4.5	...	...	...	...	...	...	...	...	...	...	TP446	A 268
21.3	21.2	21.1	21.0	20.8	20.5	...	...	...	...	...	...	...	...	...	...	...	...	CPE20N	A 451
																			A 789
...	...	...	...	...	...	...	...	...	...	...	...	...	...	...	...	...	...	S32304	A 790
...	...	...	...	...	...	...	...	...	...	...	...	...	...	...	...	...	...	CPCA-15	A 426
																			A 789
...	...	...	...	...	...	...	...	...	...	...	...	...	...	...	...	...	...	S31803	A 790

…	…	…	…	…	…	…	…	…	…	…	…	…	…	…	…	…	…	…	S32900	A 789 A 790
…	…	…	…	…	…	…	…	…	…	…	…	…	…	…	…	…	…	…	S32760	A 789 A 790
…	…	…	…	…	…	…	…	…	…	…	…	…	…	…	…	…	…	…	S32750	A 789 A 790
																			Plates and Sheets	
…	…	…	…	…	…	…	…	…	…	…	…	…	…	…	…	…	…	…	305	
13.8	13.5	11.6	11.1	10.4	9.6	8.4	4.0	…	…	…	…	…	…	…	…	…	…	…	405	A 240
13.7	13.5	13.3	13.0	12.8	*11.9*	*9.9*	7.8	6.3	5.1	4.0	3.2	2.6	2.1	1.7	1.1	1.0	0.9		304L	A 240
13.2	12.9	12.6	12.4	12.1	11.8	11.5	11.2	10.8	*10.2*	*8.8*	6.4	4.7	3.5	2.5	1.8	1.3	1.0		316L	A 240
…	…	…	…	…	…	…	…	…	…	…	…	…	…	…	…	…	…	…	X8M	A 240
16.1	15.9	15.6	15.2	14.9	14.3	*13.7*	…	…	…	…	…	…	…	…	…	…	…	…	302B	A 167
16.1	15.9	15.6	15.2	14.9	14.6	14.3	*13.7*	…	…	…	…	…	…	…	…	…	…	…	302	A 240

Note: Specifications are ASTM unless otherwise indicated. For Notes, see ASME B31.1, Notes for Appendix A Tables.

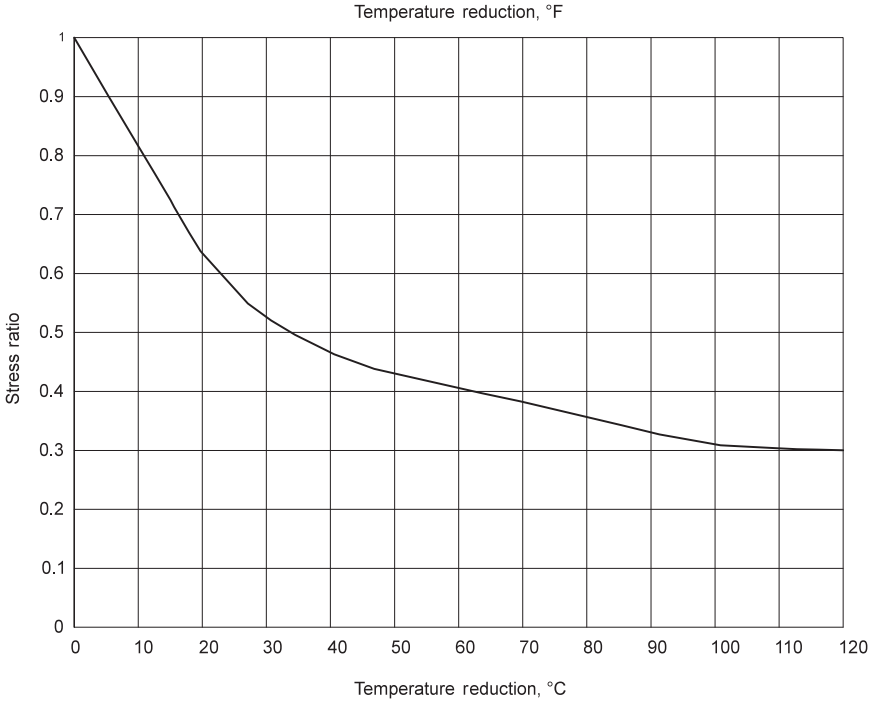

General notes:

(a) The stress ratio is defined as the maximum of the following:

(1) nominal pressure stress (based on minimum pipe wall thickness less allowances) divided by *S* at the design minimum temperature;

(2) for piping components with pressure ratings, the pressure for the condition under consideration divided by the pressure rating at the design minimum temperature;

(3) combined longitudinal stress due to pressure, dead weight, and displacement strain (stress intensification factors are not included in this calculation) divided by *S* at the design minimum temperature. In calculating longitudinal stress, the forces and moments in the piping system shall be calculated using nominal dimensions and the stresses shall be calculated using section properties based on the nominal dimensions less corrosion, erosion, and mechanical allowances.

(4) Loadings coincident with the metal temperature under consideration shall be used in determining the Stress Ratio as defined above.

Figure 3.6 Reduction in minimum design metal temperature without impact testing (ASME B31.3, Figure 323.2.2B).

considered. Stress intensification factors are not required to be included when calculating the longitudinal stress in the piping system. The stress is considered to be sufficiently low that even if a crack were to be initiated at some local high-stress region, it would be stopped advancing when it entered the general low-membrane-stress regions of the piping system.

Two additional requirements are provided for systems to be eligible for the low-stress exemptions:

- The piping shall be subjected to a hydrostatic test at no less than 1.5 times the design pressure.
- Except for piping with nominal wall thickness of ½ in. (13 mm) or less, the piping system shall be safeguarded (refer to ASME B31.3, Appendix G) from external loads, such as maintenance loads, impact loads, and thermal shock.

Thinner sections are less susceptible to brittle fracture, because of the reduced constraint. When the maximum Charpy specimen has a width along the notch of less than 0.098 in. (2.5 mm), impact testing is not required. This exemption is limited to design minimum temperatures above −55 °F (−48 °C) or the minimum temperature listed in ASME B31.3, Table A-1 (Table 3.10), whichever is less for carbon steel and other alloys listed in the third row of Code Table A-1.

3.6.6 Unlisted material qualification

A listed material is one that is listed in one of the allowable stress tables and/or one that is permitted in a component standard listed in ASME B31.3, Table 326.1. Code §323.4 addresses the use of unlisted materials along with use of materials at temperatures above the maximum temperature for which allowable stresses are provided in the code. It is the designer's responsibility to determine the allowable stresses and determine the suitability of the material for the service. Code §323.12 states unlisted materials may be used if

- "they conform to a published specification covering chemistry, physical and mechanical properties, method and process of manufacture, heat treatment and quality control,"
- "and otherwise meet any applicable requirements of ASME B31.3, and allowable stresses are determined in accordance with the ASME B31.3 Code rules or on more conservative basis."

The first requirement can be satisfied if the material is in accordance with some published standard, such as ASTM or API standard. The allowable stress basis is provided in ASME B31.3, §302.3. The allowable stresses provided for use with ASME BPVC, Section VIII, Division 2, are based on criteria consistent with ASME B31.3 and can be used directly. The allowable stresses provided for use with ASME BPVC, Section VIII, Division 1, are slightly more conservative for some materials and temperatures and can be used. Essentially, the only difference is that the margin on tensile strength in 1/3.5 versus 1/3.

Further Reading

[1] M. Frankel, 1996. Facility Piping Systems Handbook, McGraw Hill, Inc., ISBN 0-07-021891-9.
[2] Pipe Fitters Handbook, Grinnell Supply Sales Company, Exter, NH.
[3] M.L. Nayyar, 1999. Piping Handbook, McGraw-Hill, Inc., ISBN 0-07-046881-8.
[4] NAVCO Piping Datalog, National Valve and Manufacturing Company, Pittsburg, PA 1984

[5] E. Avallone, T. Baumeister, Marks' Standard Handbook for Mechanical Engineers, McGraw-Hill, ISBN 0-07-004123-7, 2006.
[6] Codes and Standards Training Institute (CASTI), ASME Piping Codes, Edmonton, AB, Canada, 2012.
[7] ASME B31.1, Standard for Power Piping, ASME, New York, 2012.
[8] ASME B31.3, Standard for Process Piping, ASME, New York, 2012.
[9] ASME B31.4, Standard for Liquid Transportation Systems for Hydrocarbons, Liquid Petroleum Gas, Anhydrous Ammonia and Alcohols, ASME, New York, 2012.
[10] ASME B31.8, Standard for Gas Transmission and Distribution Piping Systems, ASME, New York, 2012.
[11] API RP 14E, Recommended Practice for the Design and Installation of Offshore Production Platform Systems, API, Washington, DC, 2007.
[12] ASME B16.5, Standard for Steel Pipe Flanges and Flanged Fittings NPS ½ through NPS 24 Metric/Inch, ASME, New York, 2003.
[13] API Specification 6A, Specification for Wellhead and Christmas Tree Equipment, 19th ed., API, Washington, DC, 2004.
[14] ASME B16.11, Standard for Forged Steel Fittings, Socket Welding, and Threaded, ASME, New York, 2012.
[15] NACE MR-01-75, Standard Material Requirements—Metals for Sulfide Stress Cracking and Stress Corrosion Cracking Resistance in Sour Gas Oilfield Equipment for Sulfide Stress Cracking Resistant Metallic Material for Oilfield Equipment, NACE, Houston, 2012. Sections 3 and 5.
[16] ASME, The 2013 ASME Boiler and Pressure Vessel Code, ASME, Fairfield, New Jersey, 2013. Section VIII, IX.
[17] ASME SPEC 6F, Technical Report on Performance of API and ASME End Connections in a Fire Test According to API Specification 6A, third ed., API, Washington, DC, 2012.
[18] ASME SPEC 6FA, Specification for Fire Testing Valves, third ed., API, Washington, DC, 1999.
[19] API RP 14J, Recommended Practice for Design and Hazard Analysis of Offshore Production Facilities, second ed., API, Washington, DC, 2001.
[20] API RP 14C, Recommended Practice for Analysis, Design, Installation, and Testing of Basic Surface Safety Systems for Offshore Production Facilities, seventh ed., API, Washington, DC, 2001.
[21] ASME Standard A53, Standard for Seamless Carbon Steel Pipe for High Temperature Service, ASME, New York, 2002.
[22] ASME Standard A106, Standard for Seamless Carbon Steel Pipe for High Temperature Service, ASME, New York, 2002.
[23] API Standard 5L, Specification for Line Pipe, 19th ed., API, Washington, DC, 2004.
[24] ASME Standard B16.9, Standard for Factory Made Wrought Steel Butt-Welding Fittings, ASME, New York, 2013.
[25] ASME Standard A105, Standard for Carbon Steel Forgings for Piping Applications, ASME, New York, 2012.
[26] ASME Standard A234, Standard Specification for Pipe Fittings of Wrought Iron Carbon Steel and Alloy Steel for Moderate and Elevated Temperatures, ASME, New York, 2012.
[27] ASME Standard A420, Standard Specification for Pipe Fittings of Wrought Carbon Steel and Alloy Steel for Low Temperature Service, ASME, New York, 2012.
[28] ASME Standard A694, Carbon and Alloy Steel for Pipe Flanges, Fittings, Valves and Parts for High Pressure Transmission Services, ASME, New York, 1998.

[29] API Standard 6D, Standard Specification for Steel Gate, Plug and Check Valves for Pipeline Service, API, Washington, DC, 1998.
[30] API Standard 6H, Standard Specification for End Closures, Connections, and Swivels, API, Washington, DC, 1998.
[31] MSS Specification 44, Specification for Steel Pipeline Flanges, Manufacturer's Standardization Society of the Valves and Fittings Industry Inc., Vienna, Virginia, 1998.
[32] MSS Specification 75, Specification for High Test Wrought Butt Welding Fittings, Manufacturer's Standardization Society of the Valves and Fittings Industry Inc., Vienna, Virginia, 1998.
[33] NACE Standard MR01-76, Standard Specification for Metallic Materials for Sucker Rod Pumps for Corrosive Oilfield Environments, NACE, Houston, 2000.
[34] NACE RP 200, Recommended Practice for Steel Cased Pipeline Practices, NACE, Houston, 2003.
[35] NACE RP 572, Recommended Practice for Design, Installation, Operation, and Maintenance of Impressed Current Deep Ground Beds, NACE, Houston, 2003. Sections 3 and 5.
[36] API Standard 1104, Standard Specification for Welding of Pipelines and Related Facilities, 19th ed., API, Washington, DC, 1999.
[37] API Standard 571, Standard Specification for Piping Code-Inspection, Repair, Alteration and Re-Rating of In-Service Piping Systems, second ed., API, Washington, DC, 1999.
[38] API Standard 574, Standard Specification for Inspection Practices for Piping System Components, second ed., API, Washington, DC, 1999.
[39] B. Wilson, Detail Engineering and Layout of Piping Systems, second ed., 2010. ISBN 928-1-926633-18-3.
[40] A. Parisher Roy, A. Rhea Bobert, Pipe Drafting and Design, third ed., Gulf Professional Publishing, Houston, Texas, 2012.
[41] Charles Becht IV, Process Piping: The Complete Guide to ASME B31.3, third ed., ASME Press, New York, 2009.
[42] D.R. Sherwood, J. Whistance Dennis, The Piping Guide, Syentek Book Company, San Francisco, CA, 1991.
[43] Piping Engineering, sixth ed., Tube Turns Inc., 1986.
[44] L.-C. Peng, T.-L. Peng (Alvin), Pipe Stress Engineering, ASME Press, New York, 2009.
[45] B. Silowash, Piping Systems Manual, McGraw Hill, New York, NY, 2010.
[46] Control Valve Handbook, Fisher-Rosemount, 1999.

Piping system components

4

4.1 Fittings

4.1.1 General considerations

Connecting process components with pipe requires that the pipe joints be connected to form a continuous path. Various fittings are required to make turns and side connections and a means to insert instrumentation and control equipment. The selection of a pipe fitting depends upon factors such as the following:

- Pipe diameter
- Pipe material
- Pressure and temperature ratings
- Service requirements

4.1.2 Methods of connecting pipe

The most commonly used connections in the oil industry include the following:

- Threaded connections
- Socket-welded connections
- Butt-welded connections
- Bell and spigot
- Groove and clamp

4.1.2.1 Threaded connections

Threaded couplings are the easiest and quickest method of connecting pipe (Figure 4.1). However, there are a number of disadvantages. Threaded couplings are difficult to maintain a leak-proof connection, due to interference fit, in sizes greater than 3 in. (76.2 mm). There is an effective reduction in wall thickness when the threads are cut. The standard thread is a sharp "V" that creates a stress concentration and lowers the pipe's resistance to bending moments and cycling stresses. Threaded couplings are available up to 12 in. (304.8 mm). Many old larger diameter screw-end pipelines have been "back-welded" at the couplings to eliminate leaks.

Onshore practice is to use threaded pipe and couplings on pipe 2 in. (50.8 mm) and smaller in noncritical services. Most companies do not use threaded pipe and couplings larger than 3 in. (76.2 mm) nominal size. Offshore practice is to use threaded pipe and couplings on nominal pipe size (NPS) 1/2 in. (12.7 mm) up to 1½ in. (38.1 mm). Threaded connections may be used for the following:

- Pipe-to-pipe (coupling)
- Pipe-to-fitting
- Pipe-to-flange
- Fitting-to-fitting (nipple)
- Fitting-to-flange (nipple)

Surface Production Operations. http://dx.doi.org/10.1016/B978-1-85617-808-2.00004-3
Copyright © 2016 Elsevier Inc. All rights reserved.

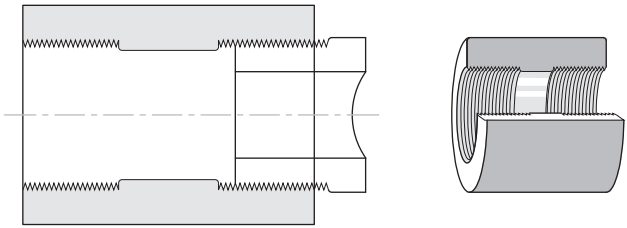

Figure 4.1 Threaded coupling.

ASME B31.3 states threaded pipe and connections should be avoided where corrosion, severe erosion, or cyclic loading is anticipated. Figure 4.2 provides the American standard pipe threaded dimensions.

Threaded fittings have pressure class designations of 2000, 3000, and 6000 (refer to ASME B16.11, Table 2):

- Pressure class 2000 psig cold working pressure (CWP) is to be used with schedule 80/XS.
- Class 3000 psig CWP is to be used for Schedule 160 and 600# piping class.
- Class 6000 psig CWP is to be used for XXS and 900# piping class.

NOMINAL PIPE SIZE, IN.	PIPE THREADS			LENGTH OF THREADED SECTION SCREWED INTO FITTING. IN.	SIZE OF DRILL FOR PIPE TAP. IN.
	NUMBER OF THREADS. IN.	DIA. AT END OF PIPE. IN.			
		TOP OF THREAD	BOTTOM OF THREAD		
1/8	27	0.393	0.334	5/16	21/64
1/4	18	0.522	0.433	7/16	27/64
3/8	18	0.656	0.568	7/16	9/16
1/2	14	0.816	0.701	9/16	11/16
3/4	14	1.025	0.911	9/16	29/32
1	11 ½	1 283	1.144	11/16	1 1/8
1 1/4	11 ½	1.626	1.488	11/16	1 15/16
1 1/2	11 ½	1.866	1.727	11/16	1 23/32
2	11 ½	2.339	2 199	3/4	2 3/16
2 1/2	8	2.819	2.619	1 1/16	2 9/16
3	8	3.441	3.241	1 1/8	3 3/16
3 1/2	8	3.938	3.738	1 3/16	3 11/16
4	8	4.434	4.234	1 3/16	4 3/16
5	8	5.490	5.290	1 5/16	5 1/4
6	8	6.546	6.346	1 3/8	6 5/16
8	8	8.534	8.334	1 7/16	8 5/16
10	8	10.645	10.445	1 5/8	10 7/16
12	8	12.633	12.433	1 3/4	12 27/64

Figure 4.2 American standard pipe thread dimensions.

4.1.2.1.1 Applications

- Typically used in small pipe sizes in both "on-plot" and "off-plot" facilities.
- Mainly used for utility systems (air, water, etc.) where material may be affected by welding, for example, galvanized carbon steel. *Note:* In the case of galvanized pipe, the NPS can go up to 4 in. (101.6 mm).

4.1.2.1.2 Advantages

- Easily made from pipe and fittings on site
- Minimizes fire hazard when installing piping in areas where flammable gases or liquids are present

4.1.2.1.3 Disadvantages

- Use not permitted by ASME B31.1 and B31.3, if severe erosion, crevice corrosion, shock, or vibration is anticipated.
- Possible leakage of joint.
- Seal welding may be required (ASME B31.1 states that seal welding shall not be considered to contribute to the strength of the joint). Normally, in "on-plot" installations, seal welding is used on all screwed connections within the facility except pipe carrying air, inert gases, or water. In "off-plot" installations, seal welding is used on all screwed piping used in hydrocarbon service and piping carrying toxic or corrosive service.
- Strength of the pipe is reduced, as forming the screw thread reduces the wall thickness.

Figure 4.3 shows the ratings of pipe, fittings, and valves that are commonly together. *Note:* This is a general guide and should not be a substitute for project-specific specifications.

4.1.2.2 Socket-welded connections

Socket-welded couplings, as shown in Figure 4.4, are available in sizes up to 3 in. Socket-welding fittings have pressure class designations of 3000, 6000, and 9000 (refer to ASME B16.11, Table 2):

- Pressure class 3000 psig CWP is to be used for Schedule 80/XS.
- Pressure class 6000 psig CWP is to be used for Schedule 160 seamless tubing.
- Pressure class 9000 psig CWP is to be used with XXS.

Each class can be furnished in carbon steel, carbon-molybdenum, chromium molybdenum, and stainless steels. *Note:* ASME does not reference any allowable CWP on any of these fittings.

Socket-welded flanges are available up to 2½ in. (63.5 mm) in diameter in ASME classes 150, 300, 600, 900, and 1500. A square-cut pipe end is inserted in the fitting socket, and the pipe and fitting are welded together on the outside with a fillet weld. This type of fitting is especially useful for joining small pipe where butt-welded metal icicles can get inside the pipe to clog or restrict flow. API RP 14E recommends 1½ in. (38.1 mm) or less should be socket-welded for hydrocarbon service above ANSI class 600, hydrocarbon service above 200 °F, hydrocarbon service subject to vibration, and glycol service.

SCREWED PIPING					
CARBON-STEEL PIPE & FORGED-STEEL FITTINGS					
METHOD OF JOINING VALVE, FITTING, OR EQUIPMENT			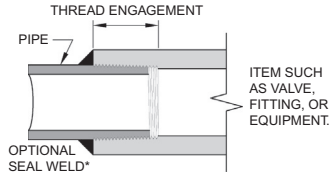 * ASME B31.1.0 states that seal welding shall not be considered to contribute to strength of the joint		
MAXIMUM LINE SIZE NORMALLY THREADED			NPS 1½		
AVAILABILITY OF FORGED-STEEL THREADED FITTINGS			NPS 1½ to NPS 4		
COMPATIBLE SCHEDULE NUMBER AND WEIGHT CLASS	PIPE	SCHEDULE NUMBER	SCH 40	SCH 80	-
		WEIGHT CLASS	STD	XS	XXS
	FITTINGS CLASS		2000	**3000**	6000
	MINIMUM FOR MECHANICAL STRENGTH IS 3000				
VALVES					
MINIMUM ASME PRESSURE RATINGS	CONTROL VALVES		ASME 300 CLASS		
	ALL OTHER VALVES		ASME 600 CLASS		

Figure 4.3 Screwed piping: ratings of pipe, fittings, and valves that are commonly used together.

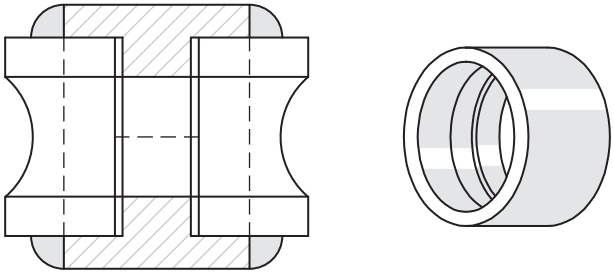

Figure 4.4 Socket-welded coupling.

Most companies allow socket-welded construction only up to 1½ in. (38.1 mm) pipe in critical services. Socket-welded end gate and globe valves can be installed with these fittings. For repair and valve replacement in confined spaces, the socket-welded end valve can be inserted over the cutoff pipe nipple and reweld without turning the valve body. Crevices in the fittings can be objectionable because of the retention of material that later becomes a contaminant. In other services, corrosion can start at such crevices. When used around vibrating machinery, the socket-welded connector should be well braced. Since it is used only on small pipe, it may be subjected to severe stresses at relatively low vibration frequencies. Supporting the assembly will increase

its natural frequency, reduce displacement, and avoid high bending moments at the connection.

4.1.2.2.1 Applications

- Typically used on process pipe carrying flammable and toxic fluids where no leakage can be tolerated. The exception to this rule is where threaded ends must be used where needed for
  - Closures that may not be permanent (plugs and caps)
  - Instrument connections (pressure, temperature, level or flow)
  - Hose connections and sample points
  - Vendors threaded connections
- Used in ASME 300 and 600 steam service.

4.1.2.2.2 Advantages

- Easier alignment on small lines than butt welding. Tack welding is unnecessary.
- No weld metal can enter the bore.
- When properly made, the joint will not leak.

4.1.2.2.3 Disadvantages

- ASME B16.11 recommends a 1/16 in. gap to prevent weld from cracking under thermal stresses. The 1/16 in. recess in the joint provides a pocket for liquids to accumulate, which could lead to corrosion.
- Not permitted by ASME B31.1 and B31.3 if severe vibration or crevice corrosion is anticipated.

Figure 4.5 shows the ratings of pipe, fittings, and valves that are commonly used together. *Note:* This is a general guide and should not be a substitute for project-specific specifications.

4.1.2.3 Butt-welded connections

Most pipes 2 in. (50 mm) in diameter and above used in hydrocarbon service are joined by butt welding (Figure 4.6). Pipe ends are normally beveled to a 37½° angle (depends on weight of pipe), to a point 1/16 in. from the internal surface of the pipe. Pipe ends are then spaced 1/16 in. apart and joined by weld metal. Butt welding provides the strongest of all pipe connections and when properly welded, it is stronger than the pipe wall.

4.1.2.3.1 Applications

- Used for most process and utility piping both “on-plot” and “off-plot”

4.1.2.3.2 Advantages

- Most practicable way of joining larger pipes and fittings, which offers reliable, leak-proof joints

4.1.2.3.3 Disadvantages

- The end of the pipe is beveled as shown in Figure 4.6. Fittings are similarly beveled by the manufacturer. The two parts are aligned, properly gapped, and tack-welded, and then, a continuous weld is made to complete the joint.

SOCKET-WELD PIPING					
CARBON-STEEL PIPE & FORGED-STEEL FITTINGS					
METHOD OF JOINING FITTING, VALVE, OR EQUIPMENT			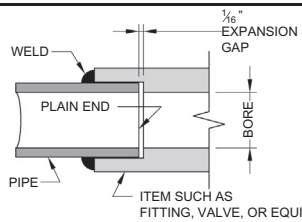 * ASME B16.11 recommends a 1/16th-inch gap to prevent weld from crackling under thermal stress		
MAXIMUM LINE SIZE NORMALLY SOCKET WELDED			NPS 1½		
AVAILABILITY OF FORGED-STEEL SOCKET-WELDING FITTINGS			NPS ⅛ to NPS 4		
COMPATIBLE SCHEDULE NUMBER AND WEIGHT CLASS	PIPE	SCHEDULE NUMBER	SCH 80	SCH 160	-
		WEIGHT CLASS	XS	-	XXS
	FITTINGS	SCHEDULE NUMBER	3000	6000	9000
		WEIGHT CLASS	SCH 40	SCH 160	XXS
PIPE NPS 1½ AND SMALLER IS USSUALLY ORDERED TO ASTM SPECIFICATION A-106 Grade B.					
VALVES					
MINIMUM ASME PRESSURE RATINGS		CONTROL VALVES	ASME 300 CLASS		
		ALL OTHER VALVES	ASME 600 CLASS		

** Socket -ended fittings are only made in class 3000, 6000, and 9000 (ASME B16.11)

Figure 4.5 Socket-welded piping: ratings of pipe, fittings, and valves that are commonly used together.

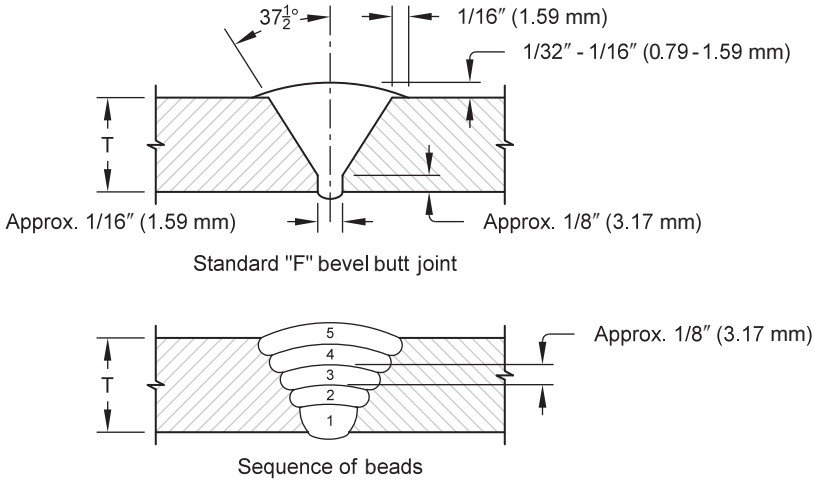

Figure 4.6 Two sections of pipe butted together for welding.

BUTT-WELDED PIPING			
CARBON-STEEL PIPE & FORGED-STEEL FITTINGS			
METHOD OF JOINING TO BEVEL-ENDED PIPE, FITTING, VALVE, OR EQUIPMENT	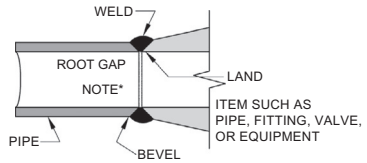		
MINIMUM LINE SIZE NORMALLY BUTT-WELDED	NPS 2		
WEIGHT OF PIPE & FITTINGS NORMALLY USED. CHOICE OF OTHER MATERIALS OR HEAVIER-WEIGHT PIPE & FITTINGS WILL DEPPEND ON PRESSURE, TEMPERATURE &/OR THE CORROSION ALLOWANCE REQUIRED. NPS 2 AND LARGER PIPE IS USUALLY ORDERED TO ASTM A-53, Grade B.	NOMINAL PIPE SIZE:	NPS 2 TO NPS 6	NPS 8 AND LARGER CALCULATE WALL THICKNESS FROM APPROPRIATE ASME CODE
	SCHEDULE NUMBER	SCH 40	SCH 20 or SCH 30
	WEIGHT CLASS	STD	---
VALVES			
PRESSURE RATING CLASS	NPS 2 AND LARGER VALVES	ASME CLASS 150, 300, 400, 600, 900,1500, 2500 ACCORDING TO SYSTEM PRESSURE (ASME 400 SELDOM USE)	
	NPS 1½ AND SMALLER VALVES	SEE FIGURES 4-3 AND 4-5	
	CONTROL VALVES	ASME 300 CLASS	

*A 'Tacking ring' may be inserted between any butt-welding joint prior to welding. Preventing weld spatter and icicles of weld metal from forming inside the pipe during welding

Figure 4.7 Butt-welded piping: ratings of pipe, fittings, and valves that are commonly used together.

Figure 4.7 shows the ratings of pipe, fittings, and valves that are commonly used together. *Note:* This is a general guide and should not be a substitute for project-specific specifications.

4.1.3 Temporary quick connections and couplings

4.1.3.1 Quick connections

There are two connectors specifically designed for temporary use. The first is the "lever" type with double lever clamping, such as the Victaulic "Snap-Joint" and Ever-Tite "standard." The second is the "screw" type with a captive nut, that is, "hose connector."

These connectors are typically used to temporarily connect process vessels. Some temporary connectors include a built-in valve. For example, "Ever-Tite" manufactures a double shut-off connector.

4.1.3.2 Bolted quick couplings

Depending on joint and gasket and the service conditions, these connections can be used in either temporary or permanent installations. These couplings are particularly useful for constructing short-run process installations, making repairs and facility modifications.

4.1.3.3 Couplings for grooved components and pipe

These couplings are used with steel, cast iron, reinforced fiberglass plastic, and plastic pipe. The ends are either grooved, welded, or cemented to the pipe ends. Fittings, such as the Victaulic and Gruvagrip couplings, are available for low-pressure (less than 100 psi) water service. Pipe ends are held together by coupling or clap lips that fit into pipe grooves. The connection is sealed by tightening the clamps against a resilient ring seal. Temporary lines aboveground can be quickly assembled or disassembled. These connectors are not fire-safe, and if used in combustible material service, care should be exercised to keep them out of areas where danger of fire exists. Figure 4.8 shows an example of the Victaulic coupling.

4.1.3.4 Compression sleeve couplings

These couplings are typically used for air, water, oil, and gas. Manufacturers include Victaulic, Dresser, and Smith-Blair. These couplings allow quick fitting and removal, joint may take up deflection and expansion, and end preparation is not required. These couplings are used for single specialized applications, such as engine exhausts and low-pressure water lines. Figure 4.9 shows an example of the Dresser coupling.

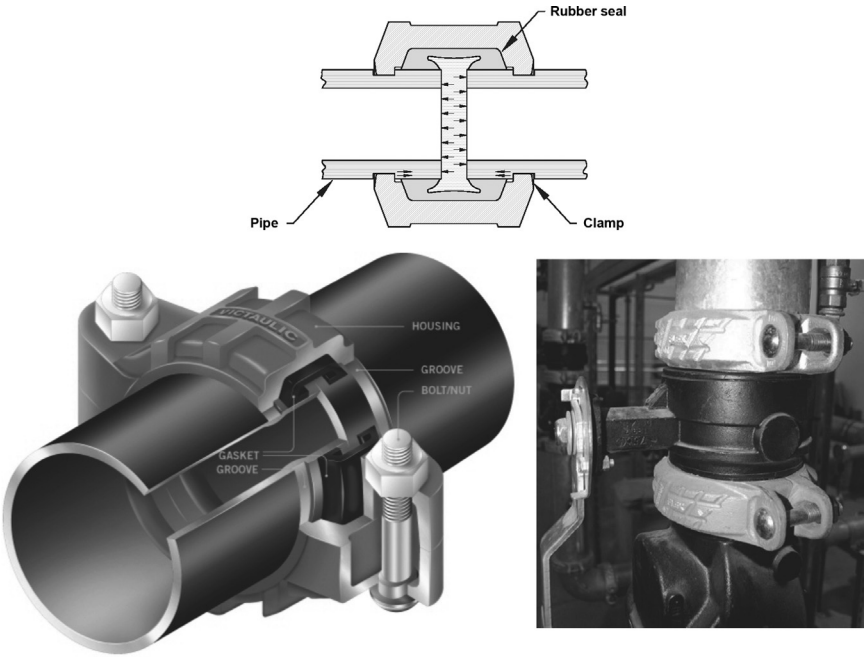

Figure 4.8 Victaulic coupling.

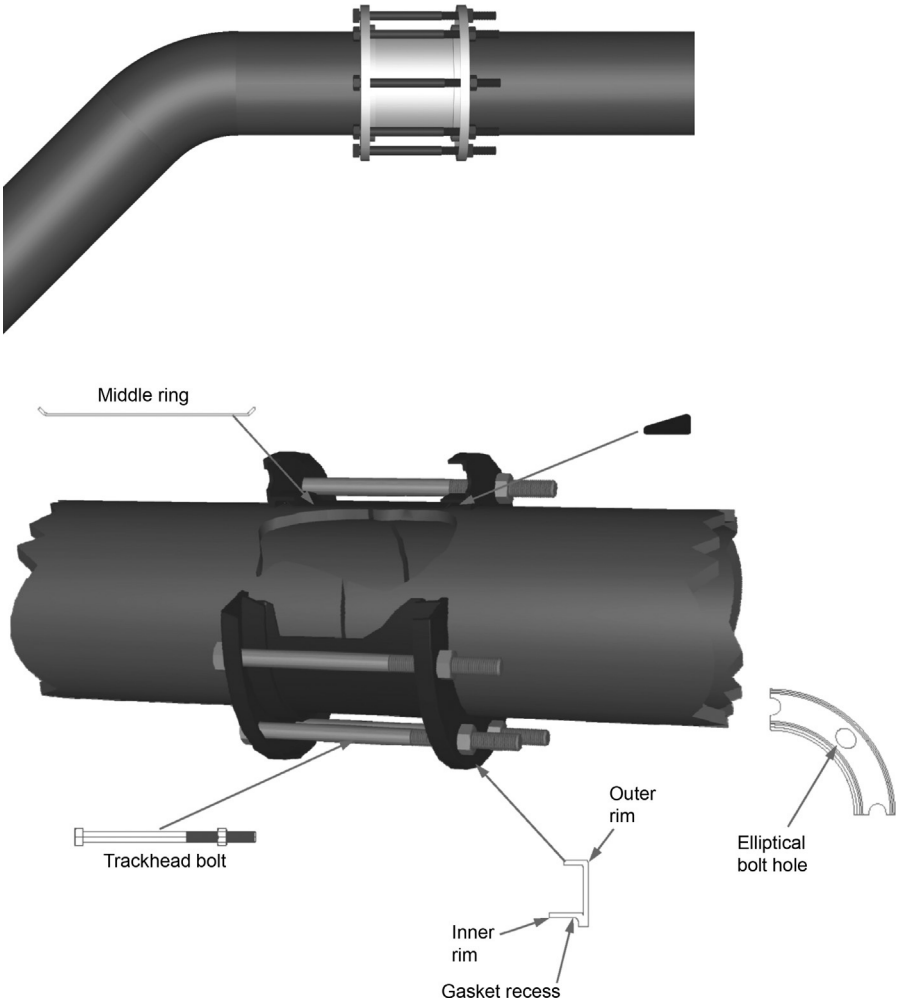

Figure 4.9 Dresser coupling.

4.1.4 Expansion joints and flexible piping

4.1.4.1 Expansion joints

As the temperature of a fluid increases, the pipe expands. This expansion can be taken up by rerouting or respacing the pipe, using expansion loops, using cold springs, and using bellows. Figure 4.10 shows a simple bellows-type expansion joint that can be used to accommodate movement and absorb vibration in piping systems.

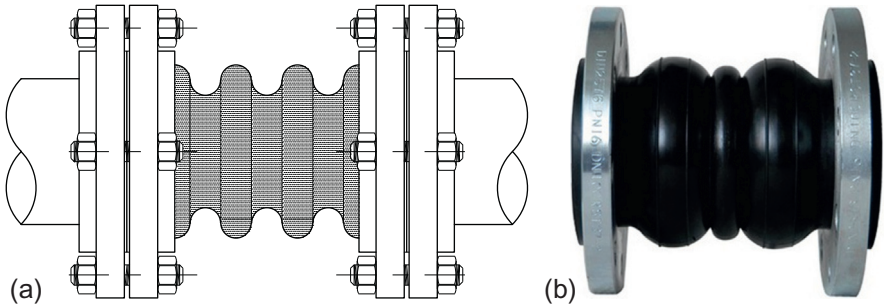

Figure 4.10 Bellows-type expansion joint.

4.1.4.2 Flexible piping

Rigid pipes with "swivel" joints or "ball" joints are used to fill and empty tankers and railcars. When there is a need for a temporary connection or where vibration or movement occurs, flexible hoses are commonly used. These hoses are available in chemical-resistant and/or armored in regular or jacketed forms.

4.1.4.3 Bell and spigot

Sewage and some unpressurized drain systems may use cast iron pipe with bell and spigot connections. Figure 4.11 shows the more frequently encountered bell and spigot types.

Lead joint (a) is accomplished by melting and pouring lead around the spigot in the bell end of the pipe. After the lead has cooled to the temperature of the pipe, the joint is caulked using pneumatic or hand tools until thoroughly compacted with the caulking material and made water tight.

Cement joint (b) is started at the bottom with the cement mixture, and the mixture then caulked. Pipe with cement joints must not be filled with water until after 12 h has elapsed.

Roll-on joint (c) requires a round rubber gasket that is slipped over the spigot before it is pushed in the bell. Braided jute is tamped behind the gasket, after which the remaining space is filled with a bituminous compound.

Push-on gasket joint (d) is made by seating a circular rubber gasket inside the contour of the socket bell. The slightly tapered pipe end permits the gasket to fit over the internal bead in the socket. A special lever action tool, manually operated, then allows the bell and spigot past the gasket, which is thereby compressed as it makes contact with the bottom of the socket.

Mechanical joint and pipe joint should be thoroughly cleaned to remove oil, grit, and excess coating and then painted with a soap solution. Cast iron gland is then slipped on the spigot end with the lip extension toward the socket (or bell) end. The rubber gasket, also painted with the soap solution, is placed on the spigot end but with its thick end toward the gland. The entire section of the pipe is pushed forward to seat the spigot into the bell; the cast iron gland is moved into position for bolting.

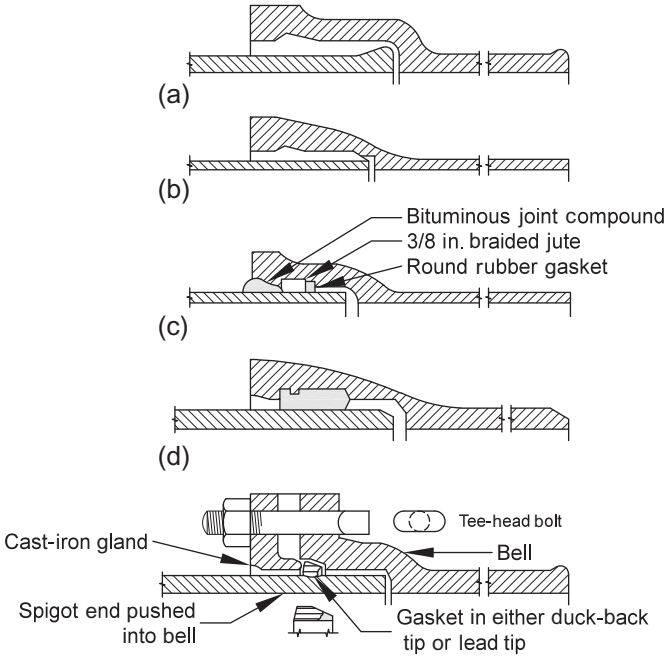

Figure 4.11 Typical cast iron bell and spigot joints. (a) Bead-type spigot. (b) Plain-end-type spigot. (c) Roll-on joint. (d) Pushed-on spigot (into bell joint).

4.1.5 Fittings

Each piping system must include fittings. Fittings are used to make

- changes in direction,
- changes in pipe size,
- side connections,
- closures.

4.1.5.1 Elbows and return bends

Elbows make a 90° or 45° change in direction of the run of pipe. Numerous types of elbows are available (Figure 4.12). Each type serves a specific need. Elbows normally used are "long radius" (LR) with centerline radius of curvature equal to 1½ times the NPS for NPS ¾ in. larger sizes. "Short-radius" (SR) elbows with centerline radius of curvature equal to NPS are also available. 90° LR elbows with a straight extension at one end ("long tangent") are available in standard weight (STD).

4.1.5.1.1 90° LR elbow

It provides a change in direction with a reasonably priced fitting that has a relatively low pressure loss.

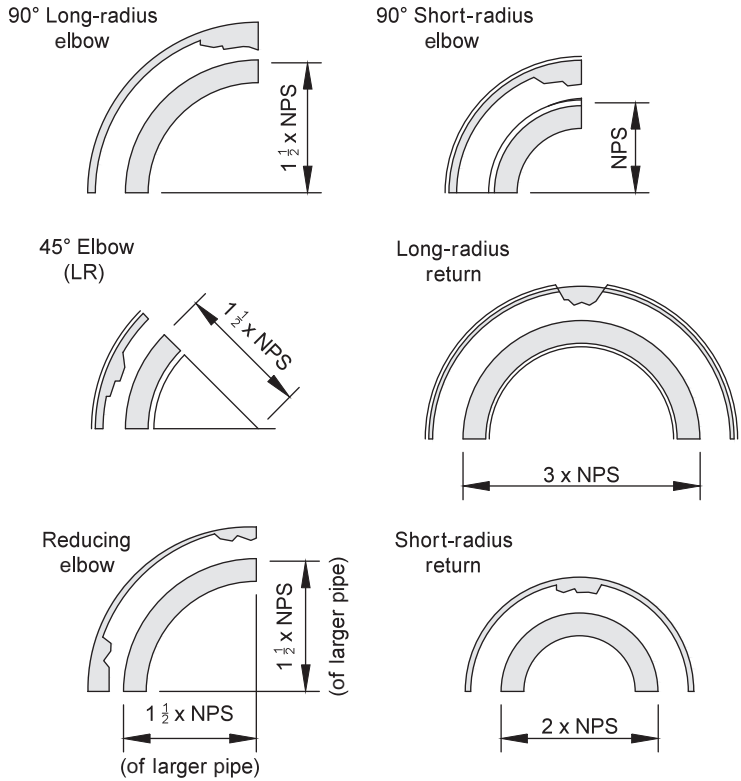

Figure 4.12 Elbows and return bends.

4.1.5.1.2 90° SR elbow

It is used when space limitations do not allow the use of LR ells. Radius of curvature is 1.0 times the NPS of the pipe compared with 1.5 for the LR ell.

4.1.5.1.3 45° LR elbow

It provides a means to offset pipe or make a gentle change in direction and is available only in the LR design for butt welding

4.1.5.1.4 Reducing elbow

It makes a 90° change in direction with a change in line size. It has a centerline radius of curvature 1½ times the nominal size of the pipe to be attached to the larger end.

4.1.5.1.5 Return bends

Return bends change direction of flow to 180° and are used to construct heating coils and tube bundles for heaters, vents on tanks, etc. They are available in short, long, and extra long radii and are often used in blowdown manifolds as they reduce the number of welds and thus the cost of fabrication. Bends are made from straight pipe. Common

bending radii are 3 and 5 times the NPS (3R and 5R). Manufacturers usually keep 3R bends in stock. Larger radius bends can be custom-made, usually by hot bending. Only seamless or ERW is suitable for bending.

4.1.5.2 Tees

Tees provide the best connection for branching or combining flow through a side outlet. Figure 4.13 shows a standard and reducing outlet tee. None of the tees require reinforcement.

4.1.5.2.1 Straight butt-welding tee

The side outlet of the standard tee is the same size as the running (straight-through) ends. They are typically used to fabricate bypasses and connect equal-size lines.

4.1.5.2.2 Reducing butt-welding tee

Reducing butt-welding tees are used to connect small inlets or distribution lines. For flow splitting, the side connection may be used for the main flow and the running connections with reducers used for the reduced flow split streams.

4.1.5.3 Reducer (or increaser)

Reducer or increaser joins a larger pipe to a smaller pipe (refer to Figure 4.14).

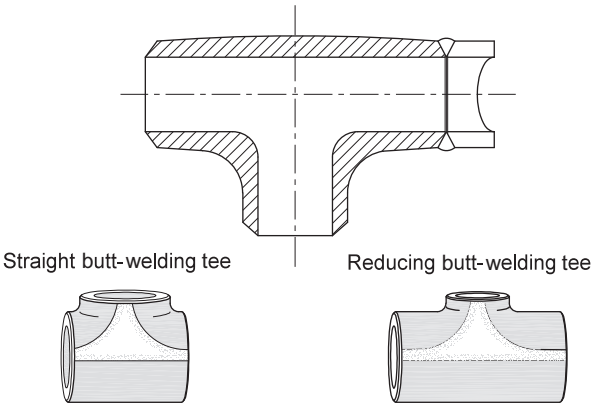

Figure 4.13 Tees.

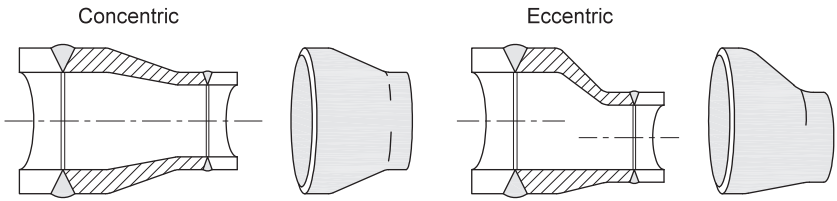

Figure 4.14 Reducers (or increasers).

4.1.5.3.1 Concentric reducer

Used for vertical aboveground and belowground pipe

4.1.5.3.2 Eccentric reducer

Used when it is necessary to keep either the top or the bottom of the line level to prevent gas or liquid traps in piping.

4.1.5.3.3 Swages

Used to connect butt-welded piping to smaller screwed or socket-welded piping (Figure 4.15). Used as an alternative to the reducer when greater reductions in line size are required. Regular swages in concentric or eccentric form give an abrupt change in line size, as do reducers. The "venturi" swage allows smoother flow.

4.1.5.4 Welding outlets

These fittings offer an alternative means of connecting into the main run and do not require reinforcement. Forged fittings incorporate a beveled end which allows them to be welded to a larger diameter pipe. Welding outlets are beveled on the opposite end to match the weld end of the pipe to be used on the side outlet. These fittings require that an opening be provided through the pipe wall either before attaching the fitting or by subsequently hot tapping the main line. Welding fittings do not provide as much lateral support as a tee or saddle connection. They provide a more corrosive environment and smaller hole openings.

4.1.5.4.1 Olets®

Olets® are reinforced connections used for process and utility connections. Weldolet®, Elbolet®, etc. are registered trademarks of Bonney Forge Corporation and/or its affiliated companies. The Olet® trademarks, brands, and product names

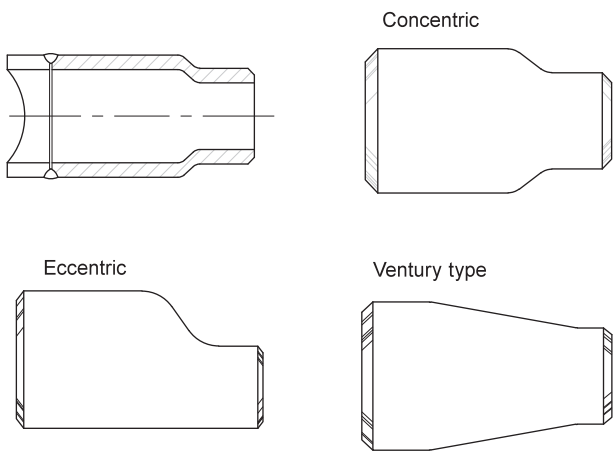

Figure 4.15 Swages.

of Bonney Forge Corporation's products belong exclusively to Bonney Forge Corporation and/or its affiliated companies and are protected from copying and simulation under national and international trademark and copyright laws and treaties throughout the world.

Most Olets® are stamped with three numbers. The branch end of the fitting has a fixed size—½ in., for example. The run size may be variable (e.g., 3-8 in.). This means that the Olet® will fit a pipe run of 3-8 in. in diameter.

4.1.5.4.2 Weldolet®

Weldolet makes a 90° branch, full-size or reducing, on straight pipe (Figure 4.16) and allows closer manifolding than is possible with tees. Flat-based Weldolets are available for connecting to pipe caps and vessel heads.

4.1.5.4.3 Elbolet®

Elbolet® makes a reducing tangent branch on LR and SR elbows (Figure 4.17).

4.1.5.4.4 Latrolet®

Latrolet® makes a 45° reducing branch on straight pipe (Figure 4.17).

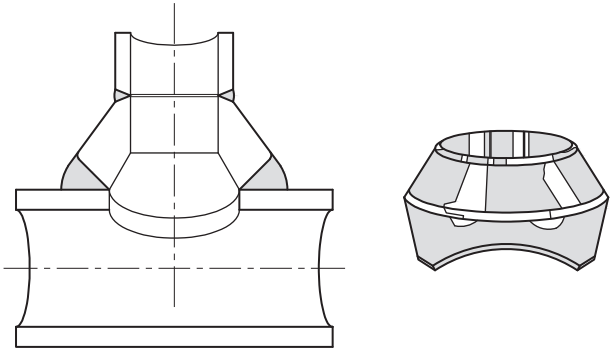

Figure 4.16 Weldolet.

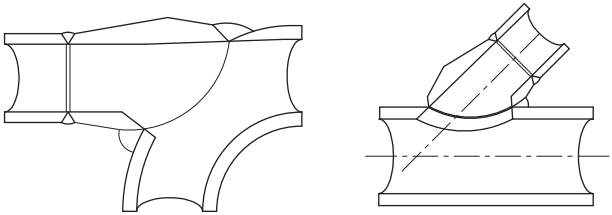

Figure 4.17 Elbolet (left) and butt-welded Latrolet (right).

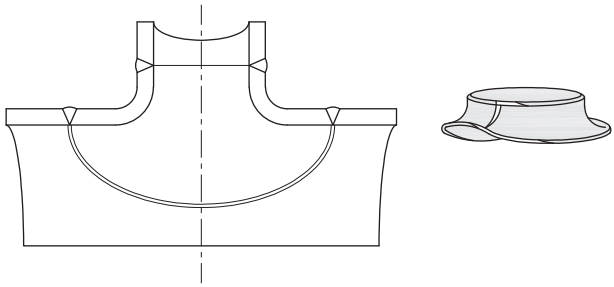

Figure 4.18 Sweepolet.

4.1.5.4.5 Sweepolet®

Sweepolet® makes a 90° reducing branch from the main run of pipe (Figure 4.18). They were primarily developed for high-yield pipe used in oil and gas transmission lines. They provide good flow pattern and optimum stress distribution.

4.1.5.5 Hot tapping

Hot tapping is a method of assessing or cutting a hole into a live/pressurized pipeline, process line, water line, and tanks for the purpose of adding a line or connection without shutting in the service or interrupting the process flow. A hot tap requires a "hot tap fitting" or tie-in point to be welded into place so that the hot tap equipment can be operated. This procedure allows one to save precious time and reduce costly downtime in production and start-up costs.

Hot taps can be performed on various systems containing oil, gas, water, process products, steam, and various other products.

4.1.5.6 Branch connections

A branch connection is made when the pipe header has either an equal or smaller size branch line connected to it. The type of branch connection to be used is specified in the piping specifications and should conform to whatever piping code is applicable to the project. Generally, many choices exist including the following:

- Unreinforced fabricated tee (stub-in)—where the branch is stubbed into the header with no reinforcing—restricted to utility lines of low pressure/temperature ratings
- Reinforced fabricated tee—branch reinforcement calculation to comply with applicable B31 Code
- Branch connection fitting (Olet®)

4.1.5.6.1 Mechanical strength

Industry practice is to use a tee unless the nominal branch size is less than ½ of the nominal diameter of the run.

4.1.5.6.2 API RP 14E

Does not recommend using repads (reinforcement) due to the difficulty in examining the welds. Recommended branch connection schedule is shown in Figure 4.19.

1	2	3	4	5	6	7	8	9	10	11	12	13	14	15	16
NOMINAL BRANCH SIZE (inches)	NOMINAL RUN SIZE (inches)														
	½	¾	1	1½	2	2½	3	4	6	8	10	12	14	16	18
½	SWT	SWT	SWT	SWT	6SC	6SC	6SC	6SC	6SC	6SC	6SC	6SC	6SC	6SC	6SC
¾		SWT	SWT	SWT	SOL	6SC	6SC	6SC	6SC	6SC	6SC	6SC	6SC	6SC	6SC
1			SWT	SWT	SOL	SOL	SOL	6SC	6SC	6SC	6SC	6SC	6SC	6SC	6SC
1½				SWT	TR	SOL	SOL	SOL	6SC	6SC	6SC	6SC	6SC	6SC	6SC
2					T	RT	RT	RT	WOL	WOL	WOL	WOL	WOL	WOL	WOL
2½						T	RT	RT	WOL	WOL	WOL	WOL	WOL	WOL	WOL
3							T	RT	RT	WOL	WOL	WOL	WOL	WOL	WOL
4								T	RT	RT	WOL	WOL	WOL	WOL	WOL
6									T	RT	RT	RT	WOL	WOL	WOL
8										T	RT	RT	RT	RT	WOL
10											T	RT	RT	RT	RT
12												T	RT	RT	RT
14													T	RT	RT
16														T	RT
18															T

Legend

T	Straight Tee (Butt Weld)
RT	Reducing Tee (Butt Weld)
TR	Straight Tee and Reducer or Reducing Tee
WOL	Welded nozzle or equivalent (Schedule of Branch Pipe)
SOL	Socketweld couplings or equivalent— 6000* Forged Steel
SWT	Socketweld Tee
6SC	6000# Forged Steel Socketweld Coupling (% inch and smaller threadbolts or screwed couplings may be used for sample, gage, test connection and instrumentation purposes)

Figure 4.19 API RP 14E recommended branch connection schedule. (Courtesy of API)

4.1.5.6.3 ASME B31.3

Reinforcement is required except where

- a tee is used,
- a coupling is used where the branch size is 2 in. or less and branch size is less than ¼ the diameter of the run,
- integrally reinforced branch connection fitting that has been pressure-tested (Weldolet®).

Note: Reinforcing can be provided by the run and branch pipe themselves if they have additional thickness over that required for pressure containment and other allowances.

Example: An unreinforced "stub-in" connection can be acceptable when the design pressure of the system is very low relative to the theoretical allowance design pressure of the piping used (e.g., low-pressure ASME 150 systems). The concern for these types of connections is "secondary stress" failure, rather than "primary stress" failure.

4.1.5.7 Closures

Closures are used to terminate the end of pipe. Pipe caps and plugs are used to terminate manifolds that will not be extended. Other closures may be made with valves or blind flanges if access to the pipe is necessary for inspection and cleaning on anticipated tie-ins.

4.1.5.7.1 Caps

They are used to seal the end of a pipe (Figure 4.20).

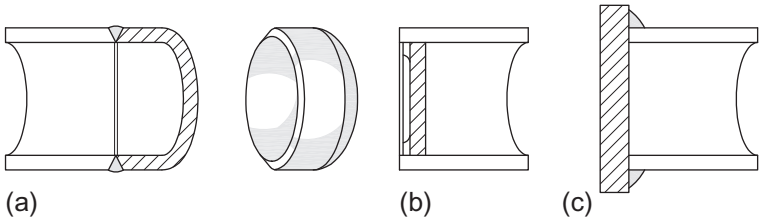

Figure 4.20 Cap and flat closures. (a) Butt-welding cap. (b) Flat closure. (c) Plate closure.

4.1.5.7.2 Flat closures

Flat closures are cut from plate stock by the fabricator.

4.1.5.7.3 Bar stock plug

Seals the threaded end of a fitting (Figure 4.21).

4.1.5.8 Flanges

All flange designs, sizes, and configurations are governed by ASME. Flanges produce a bolted joint in piping, which can be broken by undoing the bolts. Flanges are manufactured out of forged steel or cast iron and have pressure-temperature ratings that comply with the piping specifications:

- Cast iron 125# and 250#
- Forged steel 150#, 300#,400#, 600#, 900#, 1500#, and 2500#

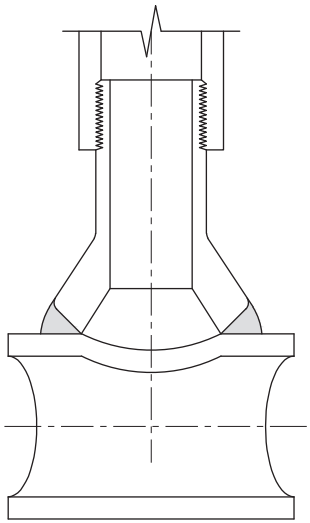

Figure 4.21 Bar stock plug.

The assembly making up a piping connection with flanges includes the following:

- Two flanges that ensure the transmission of the tightening stress in order to compress the sealing gasket
- The sealing gasket that must avoid any fluid leak to the outside if the piping is pressurized internally or air inlets in the event of vacuum piping
- Bolting that generates the necessary tightening stress to compress the sealing gasket

A flange is made up of a plate that has been drilled to have bolts inserted. One face of the plate has been machined for the contact with the gasket, and the other face has an end for the connection to the pipe. Flanged assemblies are used for all pipe sizes, for example, NPS ½ to 80 in.

Flanges are used to

- connect flange-to-flange,
- connect flange-to-line equipment (valves, strainers, removable spools, orifice fittings, etc.),
- connect flange process equipment (vessels, pumps, etc.).

Flange connections are specified for piping 2 in. (50.8 mm) and larger. A variety of flanges for making equipment pipeline connections, all supplied in accordance with ASME standards, are shown in Figures 4.22–4.24. Particular attention should be paid when tightening flanges not to distort the gasket and keep the contact faces parallel. Cross tightening must be used.

Flanges are characterized by the following:

- Nominal diameter that is equal to that of the pipe or the tubular connection they mate against.
- "Nominal pressure (PN)" rating that corresponds to their resistance to pressure at a given temperature. Flange PN ratings are given in maximum allowable pressure (MAP) in bar at 100 °F (37.8 °C).

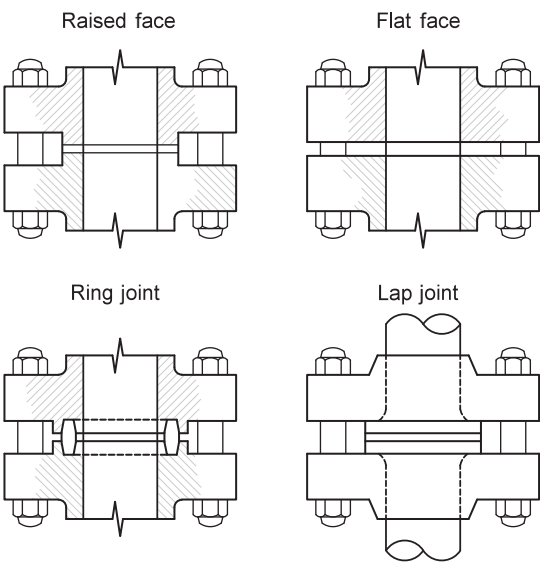

Figure 4.22 Most commonly used flange facings.

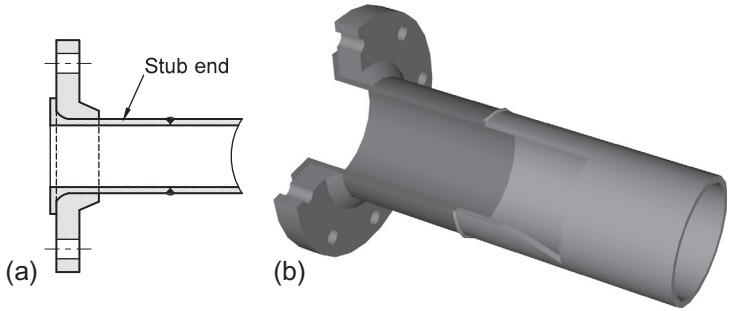

Figure 4.23 Lap joint flange (with stub end).

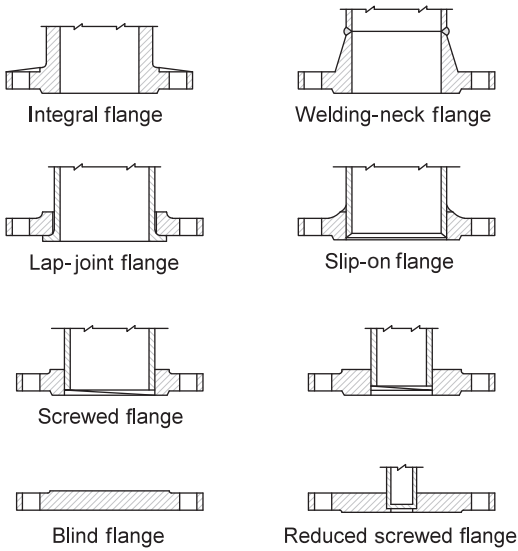

Figure 4.24 Standard steel pipe flanges.
(Courtesy of ASME B16.5)

- PN rating corresponds to a class number that defines the MAP at operating temperature. PN ratings do not provide a proportional relationship between different PN numbers, whereas class numbers do. Class numbers are therefore recommended before PN ratings.

ISO designation (PN rating)	ASME (class numbers)
PN 20	150#
PN 50	300#
PN 100	600#
PN 150	900#
PN 250	1500#
PN 420	2500#

- *Type of flange:* welding neck (WN), slip-on (SO), socket-welded (SW), lap joint (LJ), threaded, and blind flange (BF)

- *Flange facing:* flat face (FF), raised face (RF), and ring type joint (RTJ)
- *Material:* cast iron, carbon steel, stainless steel, galvanized carbon steel, copper-nickel, etc.

4.1.5.8.1 Flange facings and finishes

Many facings for flanges are offered by flange manufacturers, including various "tongue-and-groove" types, which must be used in pairs. Only four types of facing are widely used (refer to Figure 4.22).

Flange "finish" refers to the type of surface produced by matching the flange face, which contacts the gasket. The two types of finish are "smooth" and "serrated." Raised face forged steel flanges are machined to provide a "serrated concentric" groove, or a "serrated spiral" groove finish to the raised face of the flange. The "serrated spiral" finish is the most common and is the "standard" finish furnished by manufacturers. The "smooth" finish is a "special" order option and is primarily used where gaskets will not be used.

4.1.5.8.2 Raised face

The raised face facing is used for approximately 80% of all flanges. The raised face is 1/16 in. high for ANSI class 150 and 300 flanges, and 1/4 in. for all other classes. Class 250 cast iron flanges and flanged fittings also have 1/16 in. raised face.

Many of the manufacturer's catalogs give "length through hub" dimensions, which include the 0.06-inch raised face on flanges in ANSI class 150 and 300. However, they usually exclude the 0.25-in. raised face on flanges in ANSI classes 400 through 2500.

4.1.5.8.3 Flat face

Most common uses are for mating with nonsteel flanges on bodies of pumps and for mating with class 125 cast iron valves and fittings. Flat face is used with a gasket whose outer diameter equals that of the flange. This reduces the danger of cracking a cast iron, bronze, or plastic flange when the assembly is tightened.

4.1.5.8.4 Ring joint

The ring joint facing, used with either an oval section or octagon section gasket, is used in high-pressure and high-temperature applications in both upstream operations and the petrochemical industry. They are the more expensive facing and considered the most efficient for high-temperature and high-pressure service. Both flanges of a pair are identical. The facing is not prone to damage in handling as the surfaces in contact with the gasket are recessed.

4.1.5.8.5 Lap joint

Lap joints are shaped to accommodate the stub end (Figure 4.23). The combination of flange and stub end presents similar geometry to the raised face flange and can be used where severe bending stresses will not occur. The lap joint flange is economical if costly pipe such as stainless steel is used because the flange can be carbon steel, and only the lap joint stub end needs to be furnished in the line material. A stub

end is used in a lap joint, and the cost of the two items must be considered. If both stub end and flange are of the same material, they would be significantly more expensive than a weld neck flange.

4.1.5.8.6 Standard flanges (Figure 4.24)

4.1.5.8.6.1 Integral flanges Integral flanges are flanges that have been forged or cast on to fittings, valves, pumps, and other process equipment.

4.1.5.8.6.2 Weld neck flanges (Figure 4.25) Weld neck flanges have a hub that is gradually tapered down as it approaches the corresponding pipe wall at the small end. It is the most commonly used weld-on flange and is preferred for severe service conditions such as high pressures and hot/cold temperatures and where shock or vibration may be encountered. Flanges in alloy steels must have a composition comparable with the pipe to which they are welded. When a mismatch exists, a transition piece must be used between the flange and the pipe.

4.1.5.8.6.3 Lap joint flanges Lap joint flanges have a lap equal to the pipe wall thickness and are among the weakest of the standard types of flanges (true on very large pipes with thin walls). They are used in joining expensive nonferrous piping (generally with short-stub ends and welded-on and bolted together by flanges bearing on the stub lips). A seal is effected between the stub lips using suitable gaskets. It is used when piping of exotic materials is required so that the flanges may be made of less expensive material.

4.1.5.8.6.4 Screwed pipe flanges Screwed pipe flanges are restricted to small sizes and to low pressures and temperatures. Cast iron screwed Ganges is limited to nonpressurized water services. They are usually installed where a transition from welded to screw-end pipe is necessary.

4.1.5.8.6.5 Slip-on flanges (Figure 4.26) Slip-on flanges require double fillet welds, front (internal) and back (external), and are favored by some designers because the pipe does not have to be cut very accurately. It is weaker than a welding neck flange and is not to be used on services with frequent thermal cycling. The pocket

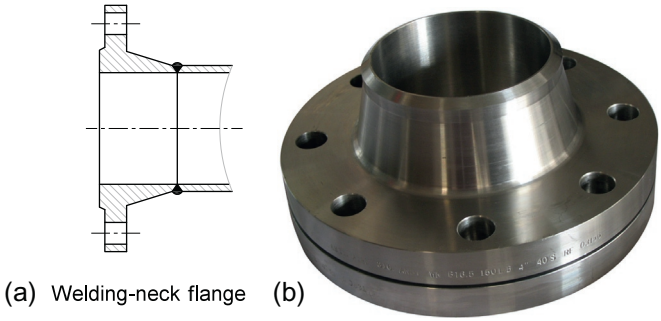

Figure 4.25 Weld neck flange.

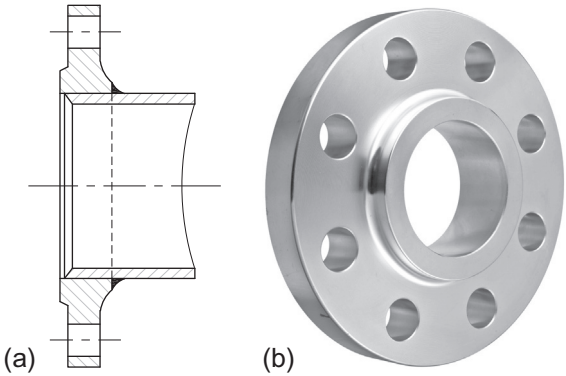

Figure 4.26 Slip-on flange.

formed between the pipe and the flanges can be objectionable when liquid or sediment settles out of the fluid. Never use slip-on flanges in hydrogen or hydrogen sulfide service as hydrogen will accumulate in the cavity between welds and may contribute to weld failure.

4.1.5.8.6.6 Reduced screwed flanges Reduced screwed flanges are designated by the size of the pipe tapping required for the screwed end pipe.

4.1.5.8.6.7 Blind flanges Blind flanges are used to blank off connections. They may be installed on access openings, such as manifolds, or on pipe ends provided for inspection.

4.1.5.8.7 Specialty flanges (Figure 4.27)

4.1.5.8.7.1 Long weld neck flanges Long weld neck flanges are used for connections on pressure vessels and heat exchangers. Their lengths are generally 5-12 in.

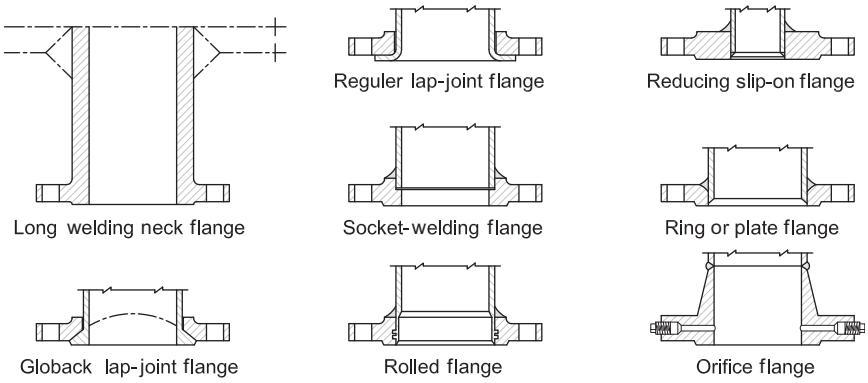

Figure 4.27 Speciality flanges.

and the standard bore is equal to the NPS. The heavy wall of the flange neck generally provides the reinforcement necessary for the vessel opening.

4.1.5.8.7.2 Globack lap joint flanges Globack lap joint flanges provide greater strength and stiffness of the lap and ease of bolt hold alignment of the loose flanges on spherical surfaces.

4.1.5.8.7.3 Regular lap joint flanges Lap joint flanges are rarely used on carbon steel pipe and restricted to low pressures and temperatures that require expensive nonferrous materials, but which can be joined with inexpensive steel flanges.

4.1.5.8.7.4 Socket-welded flanges Socket-welded flanges are approximately equivalent to the slip-on type. They are used where socket-welded fittings are specified and are generally limited to 2 in. and smaller sizes. For some services, the crevice at the pipe base of the socket may promote contamination of products and can also encourage corrosion.

4.1.5.8.7.5 Rolled-on flanges Rolled-on flanges are seldom encountered. They are limited to the terminal fittings of oil refinery heaters. These flanges are sometimes used in joining thin-walled stainless steel pipe in Schedules 5 and 10, which have an area too thin for threading. These pipes are installed in stainless steel raised-type inserts that are provided with serrations for rolling in the pipe ends with an expanding tool. The inserts are part of the flanges, which are bolted with a gasket at the faces.

4.1.5.8.7.6 Reducing slip-on flanges (Figure 4.28) Reducing slip-on flanges are preferable to reduced screwed flanges for a permanent leak-proof joint.

4.1.5.8.7.7 Ring or plate flanges Ring or plate flanges are designed for large-size openings on low-pressure equipment fabricated from steel plates.

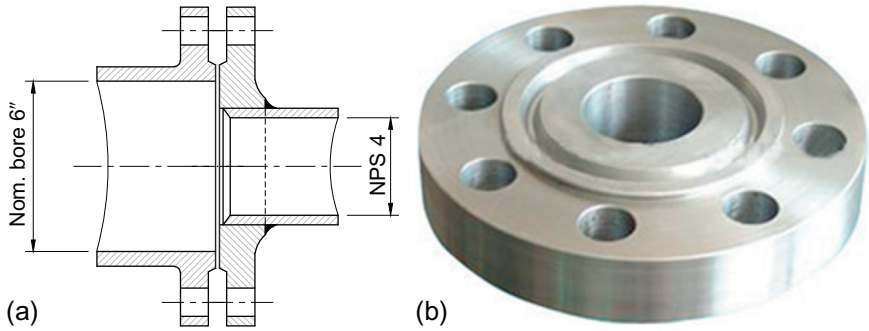

Figure 4.28 Reducing slip-on flange.

4.1.5.8.7.8 Orifice flanges Orifice flanges are manufactured for mounting an orifice plate between the welding neck flanges. To provide these flanges with a sufficient thickness for a ½ in. tapped meter connection, they are supplied with a minimum 300 ANSI class rating.

4.1.5.8.8 Flange gaskets

Flange gaskets are used to make a fluid seal between the two flanges. The two common gasket patterns are the full face, used for flat-faced flanges, and the ring type, used for raised face flanges. The choice of gasket material is based on the following:

- Pressure, temperature, and corrosive nature of the fluid
- Code or environmental requirements
- Whether maintenance or operations require repeated uncoupling
- Cost

Figure 4.22 shows flange facings and types of gaskets used with the various flange facings. Table 4.1 provides some characteristics of gaskets that will aid in selection.

4.1.5.8.8.1 Flat gasket Flat gaskets, also called soft gaskets, can be made of paper, cloth, rubber, or composition fibers for moderate services. They are often made up with a mixture of elastomers, PTFE, and synthetic fibers. To improve the mechanical strength, a very thin layer of metal can be added in the middle of the gasket thickness during the manufacturing process. There are also molded soft

Table 4.1 Gasket characteristics

Gasket material	Example uses	Maximum temperature (˚F)	Available thickness (in.)
Synthetic rubbers	Water, air	250	1/32, 1/16, 3/32, 1/8, 1/4
Vegetable fiber	Oil	250	1/64,1/32,1/16, 3/32, 1/8
Synthetic rubbers with cloth insert ("Cl")	Water, air	250	1/32, 1/16, 3/32, 1/8, 1/4
Solid teflon	Chemicals	500	1/32, 1/16, 3/32,1/8
Compressed asbestos	Most	750	1/64,1/32, 1/16, 1/8
Carbon steel	High-pressure fluids	750	
Stainless steel	High-pressure and/or corrosive fluids	1200	
Spiral-wound:			
SS/teflon	Chemicals	500	Most used thickness for spiral-wound gaskets is 0.175 Alternative gasket thickness: 0.125
CS/ asbestos	Most	750	
SS/asbestos	Corrosive	1200	
SS/ceramic	Hot gases	1900	

gaskets most often made up with fluorinated polymers that have a good resistance to chemicals.

The substitutes for asbestos are elastomer gaskets made of synthetic fibers plus binder of a laminated graphite with or without a metal core. They can be used at low temperature and between 392 °F (200 °C) and 1022 °F (550 °C) depending on their type. Fluorinated polymer gaskets cannot be used for temperatures greater than 392 °F (200 °C).

4.1.5.8.8.2 Metal-clad gaskets Metal-clad gaskets consist of the following two types:

- *Flat gasket with a metal jacket:* These gaskets are made with a metal jacket around an elastomer compound, making up the core of the gasket. They consist of 1/16 in. compressed Garlock Blue-Gard Style 3000 or equal and are used for ASME 150 and 300 class flanges in services up to 350 °F.
- *Spiral wound gasket:* These gaskets are made with a strip of graphite, nonas, ceramic, mica, or PTFE and wound in a spiral at the same time as a V-shaped metal sheet, usually in stainless steel. They are used in higher pressure and temperatures above 350 °F (662 °C) and conform to ASME B16.21. They offer better control over seating stresses on the gasket and are less susceptible to overtorquing, high temperatures, or cycle service. They are suitable for use with flat face and raised face flanges and specified for high-pressure/temperature service or where corrosive or toxic fluids are present. The following are manufacturer's designation: Flexitallic "CGI," Lamons "WRI," and Garlock "RWI." Another type of spiral wound gasket consists of an outer steel centering ring with inner winding consisting of a metal band and filler material (Flexitallic "CG," Lamons "WR," or Garlock "RW"). They provide additional radial strength to prevent gasket blowout and act as a compression stop. They are general-purpose gaskets suitable for use with flat face and raised face flanges. The advantage is that windings are confined on both inside and outside and thus cannot extrude when subjected to stress. These materials are specified to avoid the use of spiral wound asbestos with 304 stainless windings, which is a carcinogen.

4.1.5.8.8.3 Solid metal gaskets These gaskets are made with a solid metal or with thin corrugated metal sheets. They are used in very sensitive conditions of pressure and temperature. There are four main types:

- Ring type joint (RTJ) gasket (solid metal)
- Flat gasket—smooth, serrated, or stock (solid metal)
- Thin corrugated gasket with or without filler (thin corrugated sheets)
- Lens gaskets (solid metal)

Some of these gaskets can be reused after inspection, contrary to soft and metal-plastic gaskets that must be systematically scrapped.

4.1.5.8.8.4 Tongue-and-groove Metal-jacketed asbestos gasket requires a relatively high contact pressure to effect a seal. Gasket is confined in the groove and must be prevented from slipping out during the assembling of the flange or when the flange is being taken apart. It prevents gasket blowouts while in operation. Each flange is labeled with a T (tongue) and a G (groove). The face of the tongue should face the direction of flow. Some refineries order control valves with both integral

flanges with groove ends to facilitate ordering and provide interchangeability at some later date.

4.1.5.8.8.5 Ring type joint It is adapted to high pressure, requires low seating force, and is relatively immune to leakage under sudden temperature changes. ASME B16.20 and 0.21 assign higher service pressure ratings to flanges equipped with ring joints than to flanges with other standard facings. For example, in gaseous hydrocarbon service, Class 600# and above and, for liquid hydrocarbon service, class 900# and above require RTJ. Cadmium-plated soft iron or low carbon rings are used (soft iron is used for ASME 600 and 900). 304 and 316 stainless steels are used.

4.1.5.8.8.6 Insulating It is often required that adjacent parts of a pipe be electrically insulated from one another. An insulating gasket is installed between the flange parts. The gasket electrically insulates the flange faces, and sleeves and washers insulate the bolts from one or both flanges as shown in Figure 4.29.

4.1.5.8.9 Bolts for flanges

Bolting is the last component of a flange connection set. The purpose of the bolting is to resist the forces generated by internal pressure and to compress the gasket, thus assuring a good seat. Carbon steel is the usual material used for bolting in normal service conditions. When used in a marine environment, it is recommended to protect the bolting against corrosion by using corrosive-resistant cladding on the bolts.

As shown in Figure 4.30, two types of bolts are available: the machine bolt, which uses one nut, and the stud bolt, which uses two nuts. Stud bolts have displaced regular bolts for bolting flanges. The advantages of using stud bolts are the following:

- Easily removed if corroded
- Reduces confusion with other bolts
- Can be made from round stock in less frequently used sizes and materials

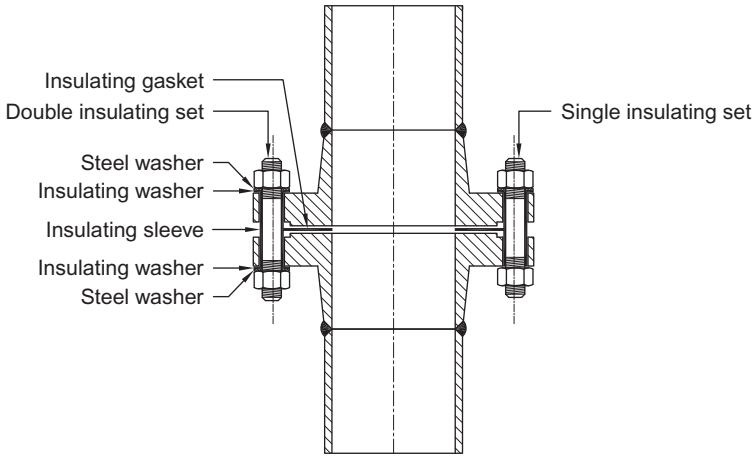

Figure 4.29 Insulating gasket set.

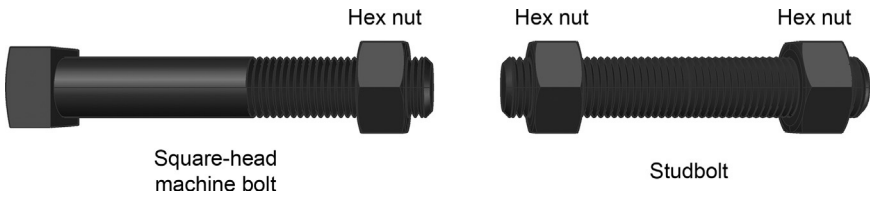

Figure 4.30 Machine square head bolt and nut (left) and stud bolt and nut (right).

The tightness of flanges is ensured by the compression of the gasket due to bolt tightening by means of the following:

Low-pressure service conditions:

- Flat spanner
- Box spanner
- Adjustable spanner

Intermediate pressure service conditions:

- Hammer wrench
- Pneumatic/hydraulic tools

High-pressure service conditions and/or large NPS:

- Bolt tensioner

A bolt tensioner system provides the following:

Advantages

- Ease of use
- Balanced tightening
- Strength control
- Protection of surface equipment

Disadvantages

- Stud bolt over length of 1D or 50 mm
- Cost of bolt tensioning device

4.1.6 Threaded fittings

4.1.6.1 Threaded

Threaded fittings (Figure 4.31) are available in a wide variety of materials than weld end including cast iron, malleable iron, steel, and various exotic materials. Pipe ends are joined by couplings and a variety of elbows are available for making changes in direction. In addition to tees for branch connections, a cross is available for a four-way junction. Sections subject to removal may be connected by ground joint unions.

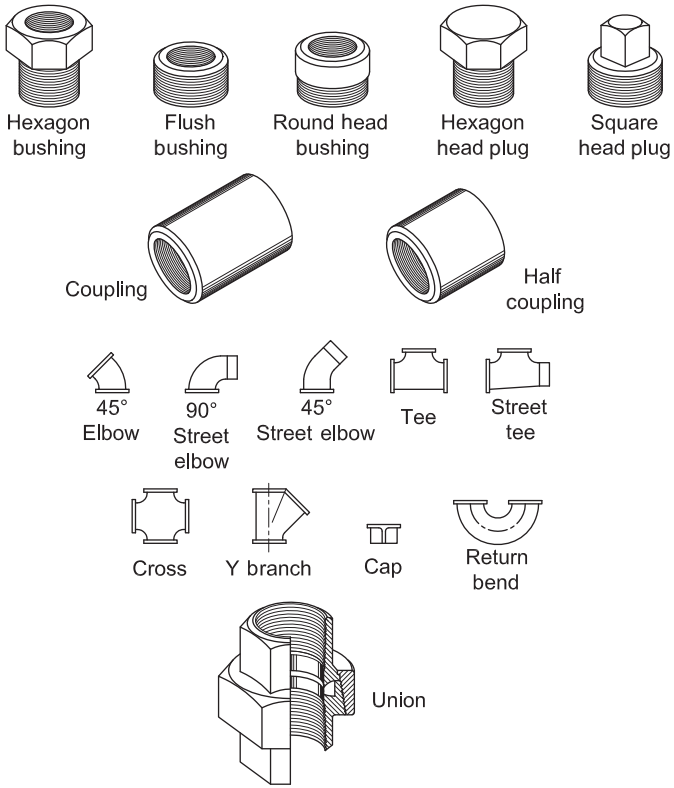

Figure 4.31 Threaded pipe fittings.

4.1.6.2 Socket-welded

Socket-welded fitting types (Figure 4.32) are in effect threaded fittings with the threads machined off leaving a shoulder to limit pipe insertion depth. Pipe connectors are either flanges or ground lip unions.

4.1.6.3 Nipples

A nipple joins fittings, valves, strainers, etc. A nipple is nothing more than a short length of pipe either fully threaded (close nipples) or threaded at both ends (TBE) or plain one end and threaded one end (POE-TOE). They are available in a variety of lengths.

A tank nipple is used for making a screwed connection to a nonpressurized vessel or tank in low-pressure service (less than 15 psig). The overall length is usually six inches with a standard taper pipe thread at each end. On one end only, the tapered pipe runs into an ANSI lock nut thread.

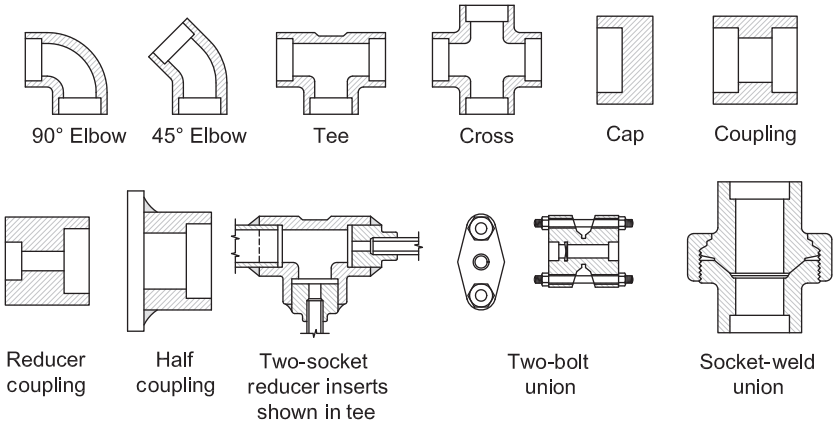

Figure 4.32 Socket-welded fittings.

4.1.6.4 Union

A union makes a joint that permits easy installation, removal, or replacement of lengths of pipe, valves, or fittings in screwed piping systems. For example, to remove a valve, one must have at least one adjacent union, and to remove piping from a vessel with thread connections, each outlet from the vessel should have one union between the valve and the vessel.

4.1.7 Temporary line closures

4.1.7.1 In-line closures

A leak-proof method of stopping flow in a piping system is necessary when

- a change in process fluid in the pipe is to be made and cross contamination is to be avoided, and
- periodic maintenance is to be carried out and a hazard would be presented by flammable and/or toxic material passing a valve.

One of the following methods of temporary closure can be used:

- Line blind valve
- Line blind and spectacle plate (Figure 4.33)
- Double block-and-bleed (DBB) (Figure 4.34)
- Removable spool (Figure 4.35)

The construction of a line blind varies. A line blind valve incorporates a spectacle plate sandwiched between two flanges, which may be expanded or tightened, allowing the spectacle plate to be reversed. Constant-length line blind valves are also available, which are made to ANSI dimensions for the run of the line. Table 4.2 compares the four in-line temporary closures.

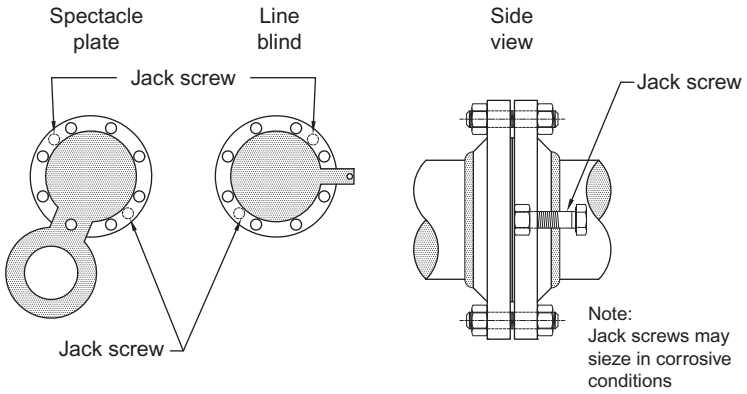

Figure 4.33 Spectacle plate (left) and line blind (right) closures.

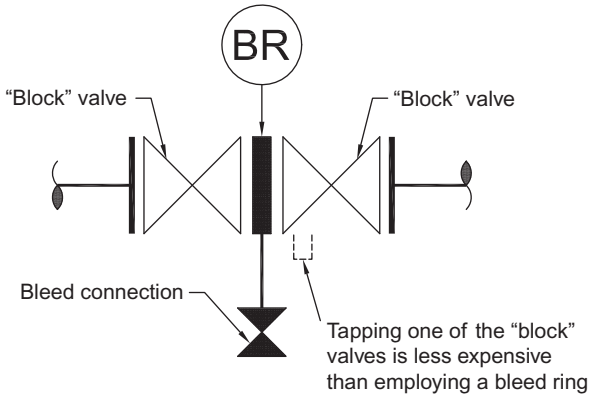

Figure 4.34 Double block-and-bleed closure.

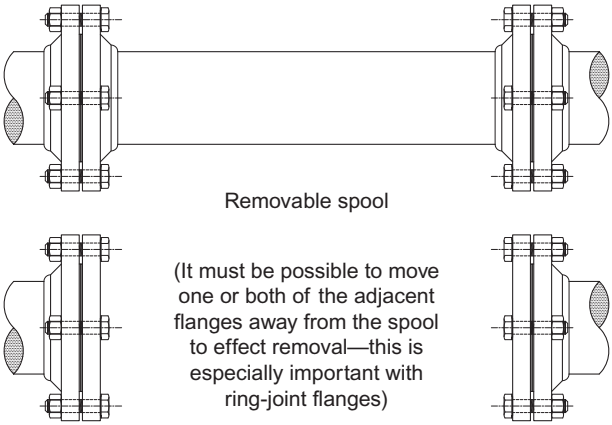

Figure 4.35 Removable spool.

Table 4.2 **In-line closures**

Closure/Criteria	Line blind valve	Spectacle plate or line blind	Double block and bleed	Removable spool
Overall cost	Least expensive	Moderate expense depending on frequency of changeover		Most expensive
Manhours for double changeover	Negligible	1 to 3	Negligible	3 to 6
Initial cost	Complete	Low	Very high	High
Degree of shut off	Complete	Complete	Doubtful	Complete
Visual indication	Yes	Yes	Yes, but suspect	Yes

If a line is to be temporary closed with a DBB, both valves are closed and the fluid between is bled off with the bleed valve. The bleed valve is then left open to show whether the other valves are tightly shut.

4.1.7.2 Closures for pipe ends and vessel openings

Temporary bolted closures include blind flanges using flat gaskets or ring joints, T-bolt closures, and hinged closures. Blind flanges are commonly used in piping systems for cleaning, inspection, and providing for future expansion. Hinged closures are often installed on vessels.

4.2 Valves

4.2.1 General considerations

The satisfactory performance of any piping system depends to a large extent upon the proper selection and location of the valves that control and regulate the flow of fluids to the connected equipment. Valves are made in a variety of designs, which are intended to perform a number of specific functions. The wide range of valve types available requires that the designer has knowledge of the characteristics of each valve type in order to select the proper valve for a specific application.

4.2.2 Valve specifications

4.2.2.1 API standards

- API Specification 6A describes flange standards.
- API Specification 6B extends data to include 30,000 psi wellhead equipment.

- API Specification 6D covers pipeline valves.
- API Specification 6F covers test procedures for classifying a valve "fire-safe."
- API Standards 593 through 609 provide standards for the manufacture of valves for use in refinery services. They also cover flanges and the various types of valves.

4.2.2.2 ASME standards

- ASME B16.5 provides dimensional standards for flanges.
- ASME B16.10 covers face-to-face and end-to-end standard dimensions.
- ASME B16.34 covers flanged, threaded, and welded-end flanges and covers the following range of valves:
  - Flanged valves: ASME class 150-2500
  - Butt-welded valves: ASME class 150-4500
  - Threaded valves less than 2½″ (63.5 mm): ASME class 150-2500
  - Socket-welded valves less than 2½″ (63.5 mm): ASME class 150-4500

4.2.2.3 MSS standards

- MSS SP72 covers ball valves with flanged or butt-welded ends for general service.
- MSS SP99 covers noncode-compliant instrument valves.
- MSS SP105 covers code-compliant instrument valves (needle valves).
- MSS SP110 covers ball valves—threaded, socket-welded, solder joint, grooved, or flange end.

4.2.3 End connections

Valves are manufactured in various end connections including screw-end, socket-welded, butt-welded, and flanged. Special connections may be specified such as union, grooved, and Grayloc connectors. Screw-end valves require less labor for connections and thus cost less than other types. Socket-welded and butt-welded valve ends must be machined within established tolerances and are more expensive than screw-end valves. Flanged valves require more metal and extensive machining of the end, which results in a much higher cost. Valves of all types are available in various metals that are suitable for a specific corrosive or temperature service. For corrosive fluids, it is always best to consult with a metallurgist, corrosion engineer, or valve manufacturer.

4.2.4 Valve terminology

Nominal size—refers to the pipe size for which the valve was designed.
Reduced port—a valve passage whose flow area is less than that of the pipe.
Full port—a valve whose port dimensions are equal to the pipe dimensions.
Seating element—refers to the part of the valve that fits against the seats to create a seal. This is the gate or disk in gate valves, the ball in ball valves, the plug in plug valves, and the disk in globe and butterfly valves.
Fire-safe—valves that meet the fire test specifications of API RP 6F (geared toward API 6D) or API 607 (latest edition) (geared toward ASME B16.34 soft-seated valves).

4.2.5 Valve parts

4.2.5.1 General considerations

Table 4.3 provides guidance for classifying valves according to their function.

4.2.5.2 Valve parts

The parts that make up a valve include the following:

- The "disk" and "seat" that directly affect flow.
- The "stem" that moves the disk—in some valves, fluid under pressure does the work of a stem.
- The "body" and "bonnet" that house the stem.
- The "operator" that moves the stem.

The term "trim" is commonly used to refer to the moving parts of the valve and the seat. This includes the stem, stem packing, and seal elements.

4.2.5.2.1 Disk, seat, and port

Figure 4.36 illustrates various types of disk and port arrangements and mechanisms used for stopping or regulating flow. The moving part that affects flow is called the "disk" regardless of its shape, and the nonmoving part it bears on is called the "seat." The "port" is the maximum internal opening for flow, that is, when the valve is fully open. Disks may be actuated by the flowing fluid or be moved by a stem having a linear, rotary, or helical movement. The stem can be moved manually or be driven hydraulically, pneumatically, or electrically, under remote or automatic control, or mechanically by weighted lever or spring.

The size of the valve is determined by the size of its end, which connects to the pipe. The port size may be smaller.

4.2.5.2.2 Stem

The two categories of screwed stems are the following:

- Rising stem (Figures 4.37 and 4.38)
- Nonrising stem (Figure 4.39)

Rising stem (gate and globe) valves are made with either "inside screw" (IS) or "outside screw" (OS). The OS type has a yoke on the bonnet and the assembly is

Table 4.3 Uses of valves

Valve action	Explanation
On/off	Stopping or starting flow
Regulating	Varying the rate of flow
Checking	Permitting flow in one direction only
Switching	Switching flow along different routes
Discharging	Discharging fluid from a system

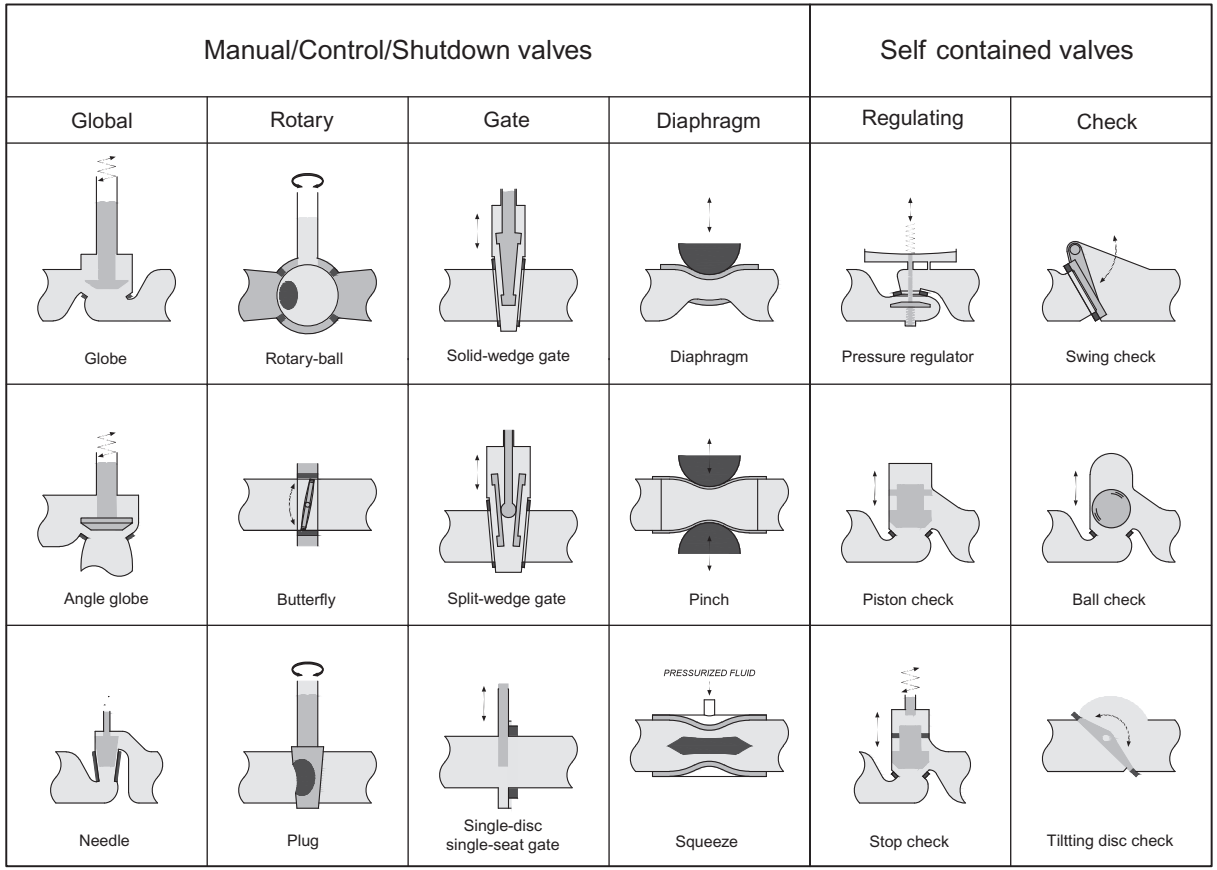

Figure 4.36 Basic valve mechanisms.

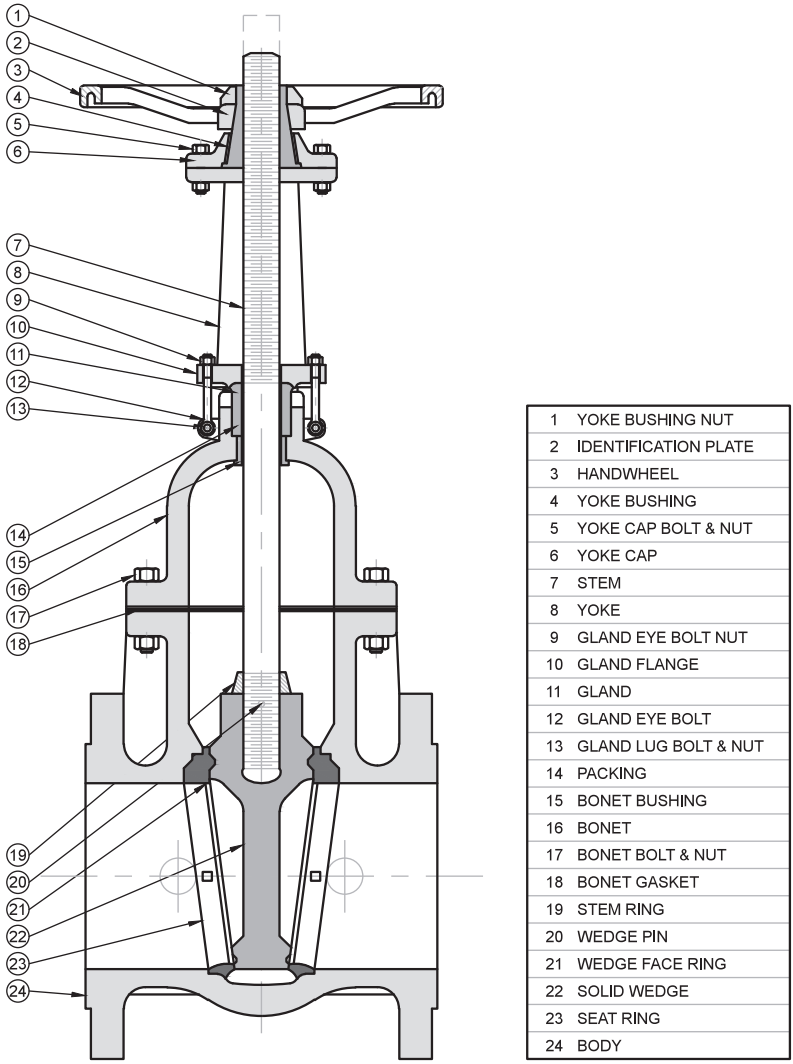

Figure 4.37 Gate valve (OS&Y, bolted bottom, and rising stem).

referred to as "outside screw and yoke" (OS&Y). Either the handwheel can rise with the stem or the stem can rise through the handwheel.

Nonrising stem valves are the gate type. The handwheel and stem are in the same position whether the valve is open or closed. The screw is inside the bonnet and in contact with the fluid.

For both types of stems, a stem extension is used where it is necessary to operate a valve through a floor or platform. Rods fitted with a universal joint may also be used to bring a valve handwheel within an operator's reach.

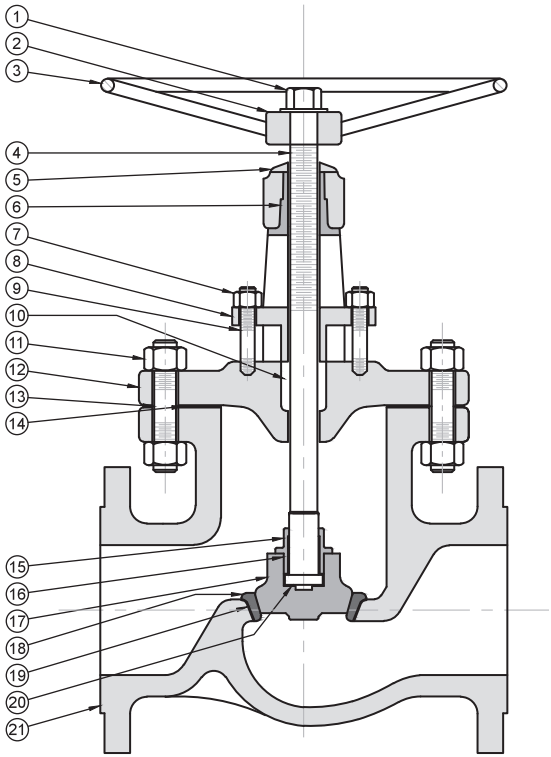

1	HANDWHEEL NUT
2	IDENTIFICATION PLATE
3	HANDWHEEL
4	STEM
5	YOKE BUSHING NUT
6	YOKE BUSHING
7	GLAND STUD NUT
8	GLAND
9	GLAND STUD
10	PACKING
11	BONNET BOLT NUT
12	YOKE BONNET
13	BONNET STUD BOLT
14	BONNET GASKET
15	LOCK NUT
16	LOCK NUT WASHER
17	PLUG DISC
18	SEAT RING
19	SEAT RING GASKET
20	THRUST PLATE
21	BODY

Figure 4.38 Globe valve (OS&Y, bolted bottom, and rising stem).

Depending on the size of the required valve and availabilities, selection of stem type can be based on whether

- it is undesirable for the fluid to be in contact with the threaded surfaces,
- an exposed screw is liable to be damaged by abrasive atmospheric dust.

It is necessary to see if the valve is open or closed.

In addition to the aforementioned types of stem used with gate and globe valves, most other valves have a simple rotary stem. Rotary ball and butterfly valves have a rotary stem, which is moved by a permanent lever, or tool applied to a square boss at the end of the stem.

4.2.5.2.3 Bonnet

The bonnet joins the moving parts of the valve to the body. The three types of attachment for valve bonnets are the following:

- Screwed (including union)
- Bolted
- Welded

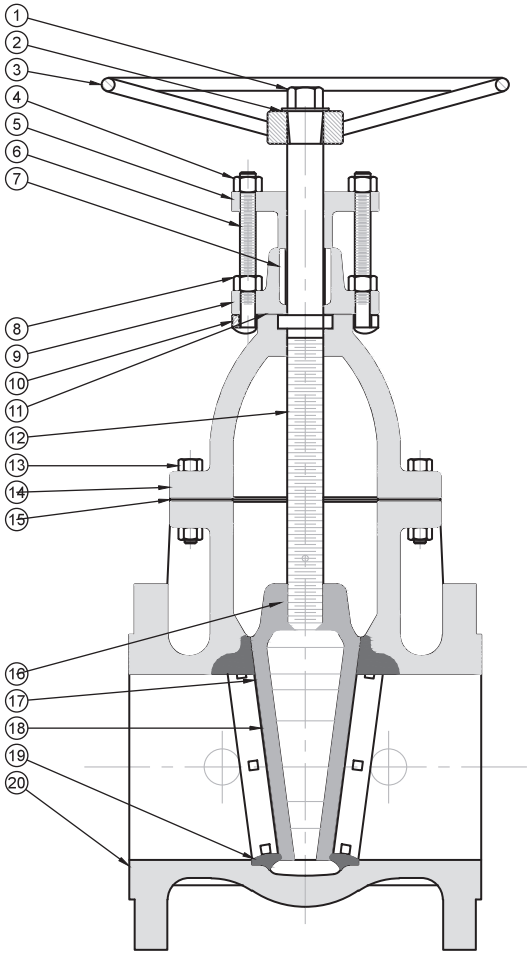

1	HANDWHEEL NUT
2	IDENTIFICATION PLATE
3	HANDWHEEL
4	GLAND BOLT NUT
5	GLAND
6	GLAND BOLT
7	PACKING
8	PACKING BOX NUT
9	PACKING BOX
10	PACKING BOX BOLT (NOT SHOWN)
11	PACKING BOX GASKET
12	STEM
13	BONNET BOLT & NUT
14	BONNET
15	BONNET GASKET
16	WEDGE BUSHING
17	WEDGE FACE RING
18	SOLID WEDGE
19	SEAT RING
20	BODY

Figure 4.39 Gate valve (IS, bolted bottom, and nonrising stem).

A screwed bonnet is used in noncritical services, for example, water service. Due to their very low cost, they are used whenever possible. Critical services require the union bonnet for small valves (1½ in. and smaller) and bolted bonnets for larger valves (2 in. and larger). The screwed bonnet may occasionally stick and turn when a valve is opened. Sticking is less of a problem with the union type of bonnet; valves with screwed bonnets are best reserved for services presenting no hazard to personnel. Union bonnets are more suitable for small valves requiring frequent dismantling than the simple screwed type.

In hydrocarbon service, the bolted bonnet has replaced the screw and union bonnet valves. A U-bolt or clamp-type bonnet is offered on some small gate valves for moderate pressures, to facilitate frequent cleaning and inspection.

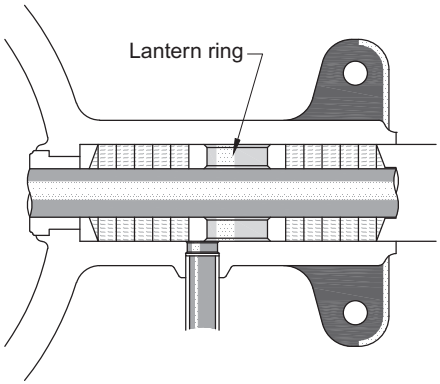

Figure 4.40 Lantern ring.

The "pressure seal" is a variation of the bolted bonnet used for high-pressure valves, usually combined with OS&Y construction. It makes use of line pressure to tighten and seal an internal metal ring or gasket against the body.

The welded connection is a heavier, infrequently used, and more expensive construction normally used for high-pressure service.

A critical factor for valves used for process chemicals is the lubrication of the stem. Care has to be taken in the selection of packing and gland design. As an option, the bonnet may include a "lantern ring" (Figure 4.40), which serves to act either

- as a collection point to drain off any toxic or hazardous seepages or
- as a point where lubricant can be injected.

4.2.5.2.4 Body

The body is the major part of the valve. It is the pressure-containing case for the operating parts and provides connections to the piping. Selecting the proper material for the interior of a valve body is important, especially when the valve handles corrosive or hazardous fluids. Valve bodies and trim are fabricated in a variety of materials. The interior of valves may be lined with a corrosive-resistant alloy.

Valves are connected to pipe, fittings, and other piping accessories by their body ends, which may be butt- or socket-welded, screwed, flanged, or finished for a hose or specialty coupling such as a Victaulic coupling.

4.2.5.2.5 Seal

Packing or seals are used between the stem and bonnet, or body, in nearly all stem-operated valves, whether the stem has a sliding vertical or rotary movement. Metal bellows (Figure 4.41) or a flexible diaphragm ("packless construction") (Figure 4.42) is used to seal the disk or stem when corrosive, flammable, or toxic fluids are handled. Gaskets are used as a seal between a bolted bonnet and valve body. Valves with flanged ends use gaskets to seal against the line

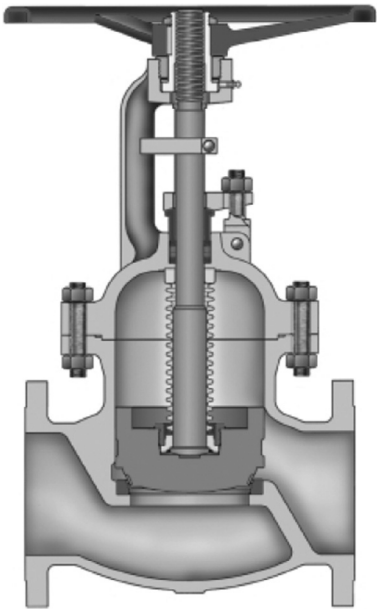

Figure 4.41 Metal bellows valve construction.

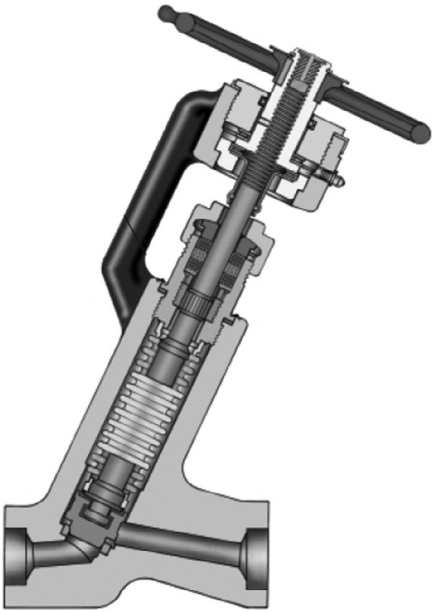

Figure 4.42 Flexible diaphragm "packless" valve construction.

flanges. Butterfly valves extend the resilient seat to also serve as line gaskets. The "pressure seal" bonnet joint utilizes the pressure of the conveyed fluids to tighten the seal (refer to the "pressure seal" discussion under the Bonnet subsection for further explanation).

4.2.6 Valve operators

4.2.6.1 Manual operators

Manual operators are installed on valves so that they can be operated by hand. A hand lever is used to operate the stems of small rotary ball and butterfly valves. A wrench is used for cocks and small plug valves (Figure 4.43).

4.2.6.2 Handwheels

Handwheels are the most common means of rotating the stem on small gate, globe, and diaphragm valves. Additional torque for gate and globe valves is provided by a "hammer blow" handwheel, which is used in lieu of a normal handwheel when easier operation is needed but where gearing is not desired (Figure 4.44).

4.2.6.3 Chain operators

Chain operators allow the operation of a valve that is installed more than 6 ft. (2 m) above grade (Figure 4.45). The stem is fitted with a chainwheel or wrench (for lever-operated valves), and the loop of the chain is brought within 3 ft. (1 m) of the level of

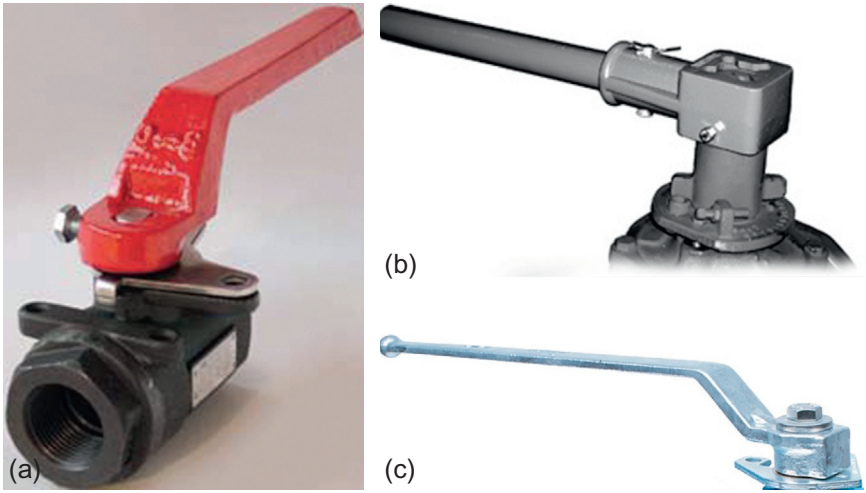

Figure 4.43 Small valve hand levers.

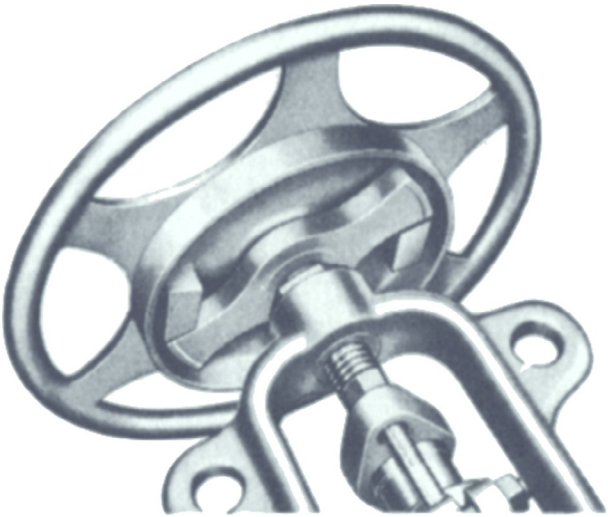

Figure 4.44 Valve handwheel.

Figure 4.45 Chain-operated valve.

the working floor. Universal-type chainwheels that attach to the regular handwheel have caused numerous accidents, especially when used in corrosive environments where an infrequently operated valve has stuck and caused the bolts to fail. This problem does not occur with chainwheels that replace regular valve handwheels.

4.2.6.4 Gear operators

Gear operators are used to reduce the operating torque required to operate a valve. The gear operator provides the mechanical advantage, which makes the valve easier to open and close (Figure 4.46). Plug valves and ball valves, especially in the larger sizes and higher pressure classes, are difficult to open and close. Thus, manual operators should be used to make them easier to operate. Manual gear operators should be considered for valves shown in Table 4.4.

4.2.6.5 Power operators

Power operators are used on very large valves and valves that require automatic operation. Power operators include electric, pneumatic, and hydraulic types. Power operators are used

- where a valve is remote from the process area,
- if the required frequency of operation would require unreasonable human effort,
- if rapid opening and/or closing of a valve is required.

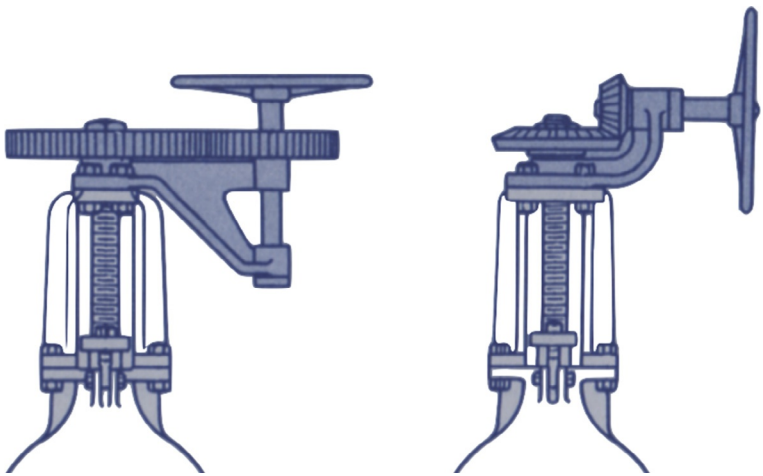

Figure 4.46 Spur gear operator (left) and bevel gear operator (right).

Table 4.4 Gear operator guide

ASME class rating	Size (in.) Gate or globe	Size (in.) Ball or plug
150	14	8
300	12	8
600	10	6
900	10	4
1500	8	3
2500	8	3

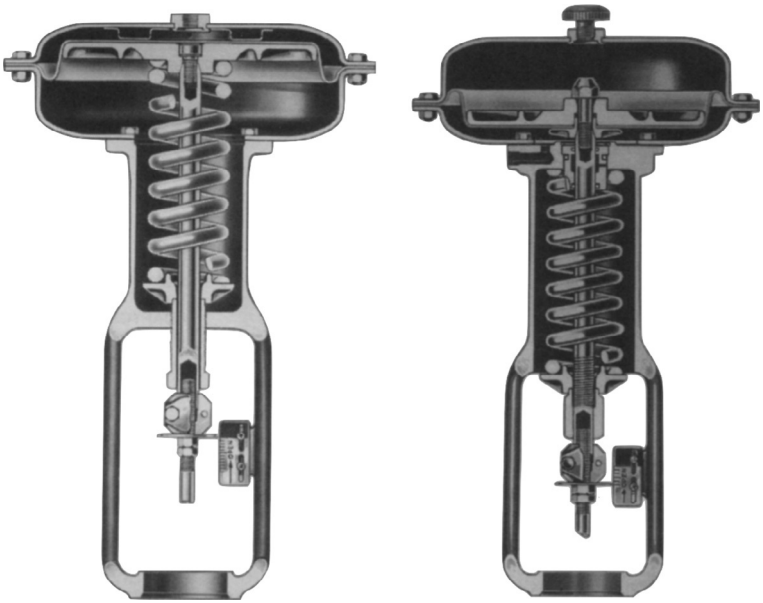

Figure 4.47 Pneumatic diaphragm operator: direct-acting (left); reverse-acting (right). (Courtesy of Fisher-Rosemount)

4.2.6.6 Diaphragm operators

The diaphragm or piston pneumatic-type power operator is the most commonly used, and it uses air or gas as the power source (Figure 4.47). The diaphragm operator uses low-pressure air or gas (15-30 psig) to operate the valve. The main advantages of this type of operator are

- it requires low-pressure air or gas to operate (instrument air is often used),
- it is easy to maintain,
- it has a low cost.

The disadvantages include its inability to provide the large force required to open some valves and slow operating speed.

The diaphragm operator can employ a spring that opposes the force of the air or gas so that the valve will fail closed or open (depending upon the application) when the air or gas signal is lost. Without the spring, the valve action is uncertain when the air or gas signal is lost, and bottled gas may be required to make the valve "fail-safe."

4.2.6.7 Piston operators

The piston operator uses high-pressure air or gas (50-120 psig) or hydraulic oil to operate the valve (Figure 4.48). The advantages of this operator are

- its ability to provide the large force to operate some large valves,
- its fast operating speed.

Figure 4.48 High-pressure piston operator.

Its disadvantages are that

- it requires high-pressure air, gas, or hydraulic fluid, and
- it is more difficult to maintain than the diaphragm type.

Piston operators can have the forces of the air, gas, or hydraulic fluid opposed by a spring so that the valve will fail either opened or closed upon loss of the fluid pressure.

4.2.6.8 Electric operators

Electric operators use an electric motor to open or close the valve. They are not generally used because the valve does not have a "fail-safe" position.

4.2.7 Valve functions

Valve functions are generally broken into two major service categories: on/off service and throttling (regulating flow) service. Valves commonly used in on/off service include gate valves, plug valves, and ball valves. Valves used in throttling service include globe valves, butterfly valves, diaphragm valves, and pinch valves. Some valves can be used in both on/off and regulating services. In addition, there are specialty valves that are designed for specific functions such as minimizing backflow (check valve), switching (three-way diverter valve), and relief.

Valve function may be completed by process and/or safety requirements:

- Normally open (NO) or normally closed (NC)
- Locked open (LO) or locked closed (LC)

Table 4.5 Valve function versus valve type

Function	Corresponding valve type
On/off	Gate and plug valves (conical and spherical)
Flow control	Globe, needle and piston valves
Non return	Check valves (swing, piston, ball, nonslam)
Bleed	Globe and needle valves
Safety	Pressure safety valves (PSV), pressure relief valves (PRV), and temperature safety valves (TSV)

- Car-sealed open (CSO) or car-sealed closed (CSC)
- Shutdown valve (SDV), emergency shutdown valve (ESDV), and blowdown valve (BDV)
- Motor-operated valve (MOV) and remote-operated valve (ROV)

Valves may have different functions. In particular, a valve will be chosen for the function it assumes. See Table 4.5.

Valves are characterized by the following:

- Type
- Nominal diameter (inches)
- ASME class number (150#, 300#, etc.)
- Body and trim material

4.2.7.1 On/off (block) valves

Block valves permit fluids to pass through with minimum flow restriction and pressure loss when fully open and yet provide a tight seal when fully closed. On/off control is most commonly accomplished with gate valves. Most types of gate valves are unsuitable for regulating due to the erosion of the seat and disk that occurs in the throttling position due to vibration of the disk (chattering). In some applications, it may be desirable to use globe valves for on/off service, as they offer tighter shutoff. However, the primary function of globe valves is that of regulating flow.

4.2.7.2 Throttling (regulating) valves

Throttling valves regulate flow by introducing a flow restriction in the flow stream. The flow restriction reduces the area available for flow by changing the direction of flow or by a combination of both. Throttling control is most often accomplished by using a globe valve. For line sizes greater than 6 in., the choice of a valve for throttling service tends to go to suitable gate or butterfly valves. For more satisfactory service, the direction of flow through the valve recommended by the manufacturer is from stem to seat. This configuration assists closure and prevents the disk chattering against the seat when throttling. Flow should be from seat to stem-side when there is a hazard presented by the disk detaching from the stem, thus closing the valve, or if a composition disk is used, as this direction of flow yields less wear.

4.2.7.3 Valves used for both on/off and throttling (regulating) service

The rotary ball and butterfly valves can be used in both on/off and regulating service. The rotary ball valve offers the following:

4.2.7.3.1 Advantages

- Low operating torque
- Available in large sizes
- Compact
- 90° stem movement
- In-line replaceability of all wearing parts

4.2.7.3.2 Disadvantages

- Fluid is trapped within the body (and within the disk on closure).
- Compensation for wear is effected only by resilient material behind the seats.

The latter disadvantage is avoided in the single-seat "eccentric" configuration, which has the ball slightly offset so that it presses into the seat, on closure.

The principle uses are for water, oils, slurries, gases, and vacuum. The valve is available with a ball having a shaped port for regulation.

The butterfly valve offers the advantages of

- rotary stem movement (90° or less),
- compact,
- absence of pocketing.

Butterfly valves are available in all sizes and are used for gases, liquids, slurries, powders, and vacuum. The usual resilient plastic seat has a temperature limitation, but right closure at high temperatures is available with a version having a metal ring seal around the disk. If the valve is flanged, it may be held between flanges of any type. Slip-on and screwed flanges do not form a proper seal with some wafer forms of the valve, in which case the resilient seat is extended to serve also as line gaskets.

4.2.7.4 Valves used to minimize backflow

All valves in this category are designed to permit flow of liquid in one direction and close if flow reverses.

4.2.8 Valve types

The five general valve types are the following:

- Gate
- Plug
- Ball
- Globe
- Butterfly

4.2.8.1 Gate valves

4.2.8.1.1 General considerations

Gate valves are characterized by a "gate" (Figures 4.49 and 4.50) that closes in a plane perpendicular to the flow of fluid. They are used primarily for on/off, nonthrottling service. Shearing of high-velocity flow will cause a partially open disk to vibrate and chatter, which will damage the seating surfaces and prevent a tight seal. They are suitable for most fluids including steam, water, oil, air, and gas. Gate valves

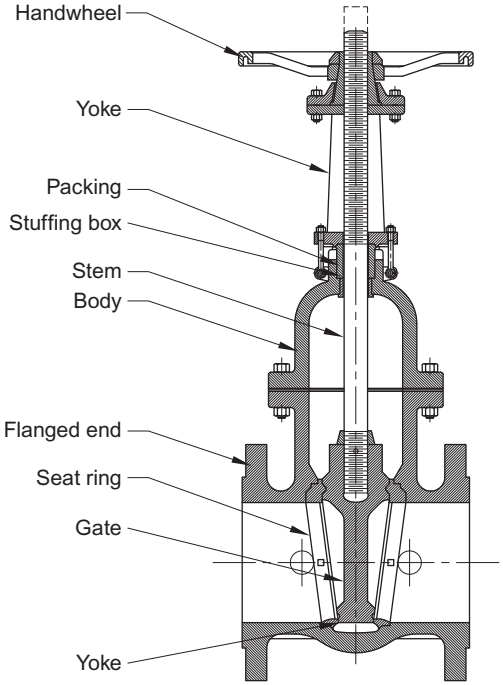

Figure 4.49 Gate valve components.

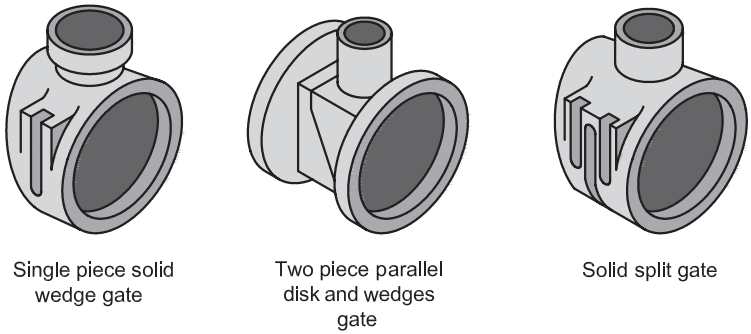

Figure 4.50 Gate designs.

may have either a solid or flexible wedge disk. In addition to on/off service, gate valves can be used for regulating flow, usually in sizes 6 in. and larger, but will chatter unless the disk is fully guided throughout travel.

Gate valves respond slowly, requiring numerous turns of the handwheel, to go from fully open to fully closed. The disks are made in either a solid or flexible wedge disk. Flexible disks were developed to overcome sticking on cooling in high-temperature service and minimize operating torque. High-pressure service of large sizes is usually cheaper than plug or ball.

Gate valves are more commonly used in refineries and petrochemical plants where pressure remains relatively low, but temperature may be very high. Gate valves are used less in upstream oil and gas production facilities due to high operating pressures, long opening/closing times, and severe environmental conditions when operating in marine atmospheres.

The gate valve is a block valve. Due to its design, it cannot control flow; even at the beginning of opening, erosion of the seat and disk occurs, resulting in the destruction of the tight faces.

4.2.8.1.2 Parallel gate valves

Parallel gate valves utilize a parallel-faced, gatelike seating element. A double-disk parallel gate valve has two parallel disks that are forced, on closure, against parallel seats by a "spreader." They are used for liquids and gases at normal temperatures. On the other hand, the seating force in a single-disk parallel gate valve is provided by the fluid pressure acting on either a floating disk or a floating seat. This configuration allows closure with flow in either direction. They are used for liquid hydrocarbons and gases. If the fluid pressure is low, the seating force provided by the fluid pressure may be insufficient to produce a satisfactory seal in metal-sealed valves. If the fluid pressure is high, frequent valve operation may lead to excessive wear of the seating forces; thus, parallel gate valves are normally used for on/off duties that require infrequent operation.

4.2.8.1.3 Full-bore through conduit gate valves

Full-bore through conduit gate valves prevent solids from entering the body cavity. The valve body extends equally on both sides of the valve centerline to form a cavity long enough to contain a disk or gate having a circular port of the same dimension as the pipe internal diameter (full port valve) (Figure 4.51). These valves may be a solid plate or two-piece plate design, which isolates the valve body cavity against the fluid in both the open and closed position. They are used in pipelines that must be scraped or where a full-bore valve is required.

4.2.8.1.4 Wedge gate valves

Wedge gate valves differ from parallel gate valves in that the seating element is wedge-shaped, instead of parallel (Figure 4.52). The disk or wedge can be a single-piece or a two-piece design. The purpose of the wedge shape is to introduce a high supplementary seating load that enables metal-sealed wedge gate valves to seal against not only high but also low fluid pressure. The wedge shape also results in a seal on both sides of the

Figure 4.51 Full-bore through conduit gate valve. (Courtesy of WKM)

gate. Since the disk is in contact with the seats only when the valve is closed, the wedge gate valve offers a maximum resistance to wear, where turbulent flow is present.

4.2.8.1.5 Plug disk gate valves

The plug disk gate valve differs from other gate valves in that it can be used in a throttling service (Figure 4.53). This configuration offers minimum resistance to flow when fully open, a feature common to most gate valves. They are used where minimal pressure drop (unrestricted flow) is required.

4.2.8.2 Plug valves

4.2.8.2.1 General considerations

Plug valves are similar in design to a wooden spigot. The plug valve is a rotary valve in which a plug-shaped seating element is rotated through 90° (1/4 turn) to engage or disengage a port in the plug with the ports in the valve body. The shape of the plug can be either cylindrical or tapered but is generally tapered to allow adjustment of clearance between the plug and the seat on some models (Figure 4.54). The advantages of the plug vale are

- compact,
- rotary 90° stem movement.

The tapered plug tends to jam and requires a high operating torque; this is overcome by the use of a low-friction (Teflon) seat or lubrication (drawback of possible fluid contamination).

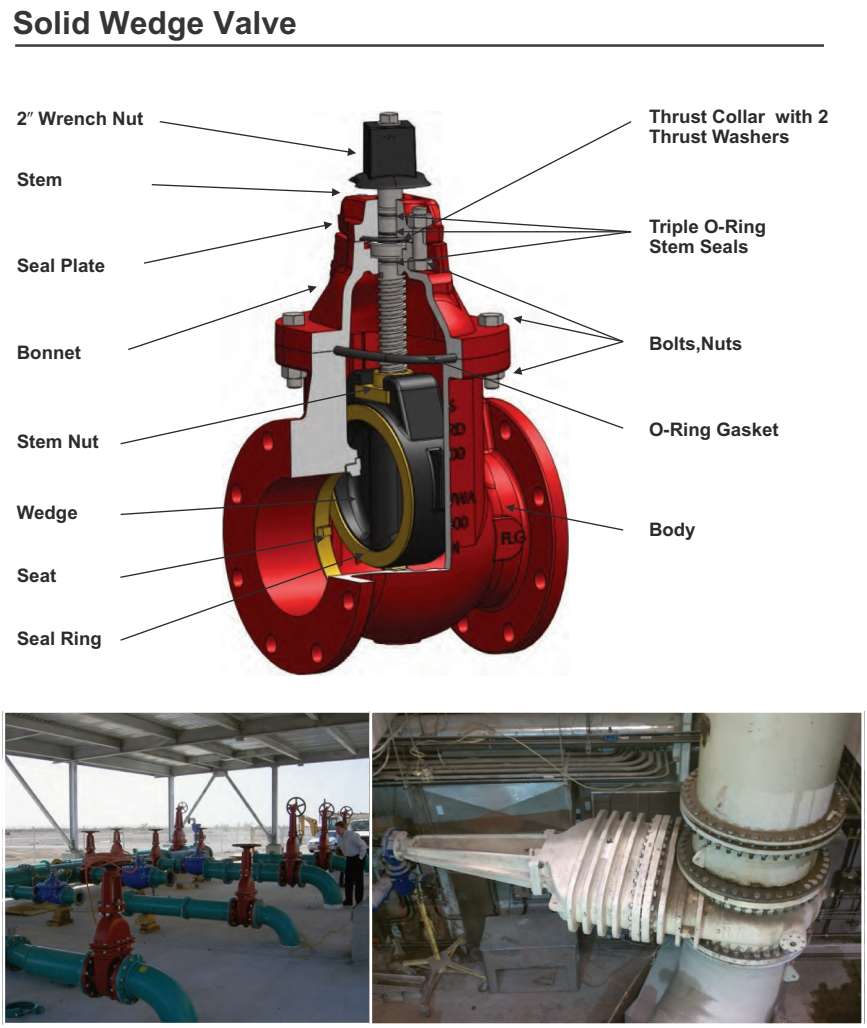

Figure 4.52 Wedge gate valve.

The plug valve port is generally rectangular in cylindrical plugs and truncated triangular in taper plugs. The valve shape permits a slender valve construction of less weight than a full open valve but at the expense of added pressure drop.

Plug valves are used in on/off service and can be used in moderate throttling applications but only in small sizes. They are also used in locations where a valve requires frequent operation, such as reciprocating compressor lead lines and well manifolds. Plug valves are also used for light hydrocarbons, viscous hydrocarbons, gases, and corrosive products. Cylindrical and taper plug valves are exclusively used for stop valves. The pressure drop for plug valves is generally low and disappears when the valve is fully open. They are usually less expensive than ball valves and are manufactured in

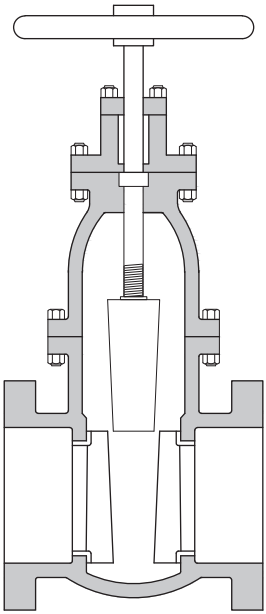

Figure 4.53 Plug disk gate valve.

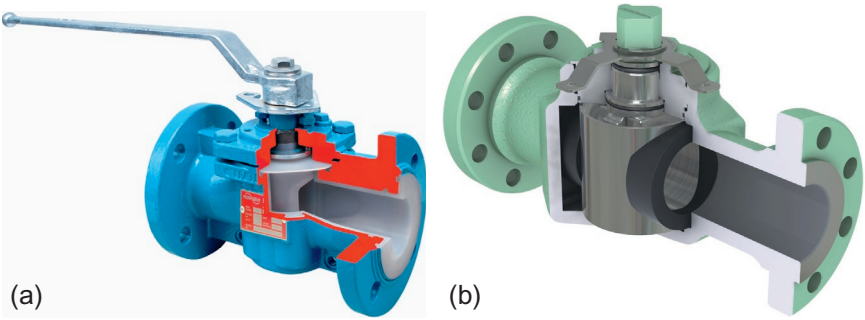

Figure 4.54 Plug valve.

lubricated and nonlubricated designs. The disadvantages of plug valves are its lack of visual indication on opening and closing and it requires lubricated plugs for perfect sealing, except for spherical rotating plugs.

4.2.8.2.2 Lubricated plug valve

In the lubricant configuration, channels surround the ports to ensure positive sealing against both internal and external leakage (Figure 4.55). Lubrication keeps the plug in free working condition and protects the working surfaces from corrosion and wear. A defective seat seal can be restored by injecting additional sealing compound while the valve is in service.

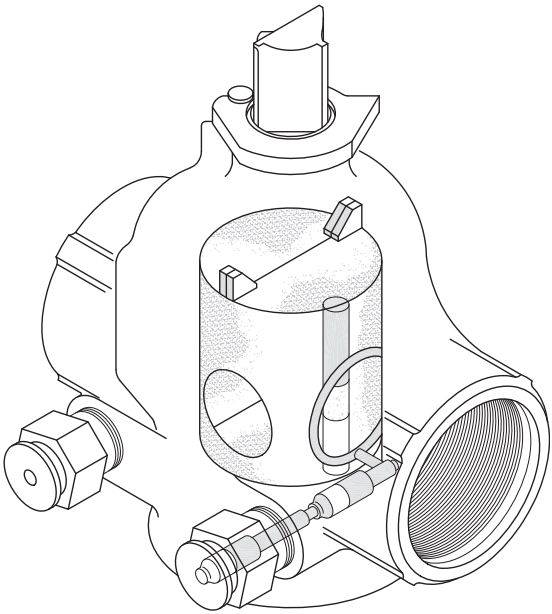

Figure 4.55 Lubricated plug valve with cylindrical plug and circular ports.
(Courtesy of Mission Steel)

Lubricated plug valves are used for abrasive fluids since the seating surfaces are protected in the fully open position from contact with the flowing fluid and a damaged seat seal. If the plug becomes stuck due to infrequent use or as a result of neglected lubrication, the injection of additional sealing compound (lubricant) can lift the plug off the seat and allow the plug to be moved again. Gross neglect can result in the sealant hardening in the channel to such an extent that new sealant cannot be injected.

4.2.8.2.3 Nonlubricated plug valves

The nonlubricated plug valve may either be the lift type or have an elastomer sleeve or plug coating that eliminates the need for lubrication between the plug and seat. The sleeve or coating keeps the friction between the plug and seats low to allow the plug to move freely. They exhibit better sealing characteristics than a metal-to-metal seal and ensure an effective seal is formed against the fluid leakage. Nonlubricated plug valves are used where a positive seal is needed and maintenance must be kept to a minimum.

Nonlubricated plug valves require a minimum amount of installation space, are simple to operate, and are quick-acting in that they only require a quarter-turn to open or close. The taper plug design ensures a close fit and with lubrication, the seal is improved. On the other hand, they require high torque to open or close a valve; thus, it is hard to actuate.

4.2.8.2.4 Dynamically balanced plug valves

The dynamically balanced plug valve reduces the sealing force on the valve and requires less operating torque. In large sizes and at high operating pressures, it is

necessary to install gear or power operators on plug valves to overcome the high torque. Plug valves handling combustible or dangerous materials should be fire-safe.

4.2.8.2.5 Patterns

4.2.8.2.5.1 Short pattern Short pattern plug valves have reduced area plug ports and face-to-face dimensions that are interchangeable with gate valves. This pattern applies to sizes up to 12 in. in ANSI class 150 only.

4.2.8.2.5.2 Regular pattern Regular pattern plug valves have plug ports with areas larger than short or venture patterns. The face-to-face dimensions are interchangeable with gate valves for pressure rating class 300 and higher. Class 150 have face-to-face dimensions that are not interchangeable with gate valves.

4.2.8.2.5.3 Venturi pattern Venturi pattern plug valves have reduced area ports and body throats that are approximately a venture. The face-to-face dimensions are interchangeable with gate valves for pressure rating class 300 and higher. Class 150 have face-to-face dimensions that are not interchangeable with gate valves.

4.2.8.2.5.4 Round-port full-pattern Round-port full-area pattern plug valves have full-area round ports through the valve. The face-to-face dimensions are longer than short, regular, or venturi pattern plug valves. They are not interchangeable with gate valves.

4.2.8.3 Ball valves

4.2.8.3.1 General considerations

Ball valves are used for both on/off and throttling service. Ball valves are similar to plug valves but use a ball-shaped seating element (Figure 4.56). They are quick-opening and require only a quarter-turn to open or close. They require manual or power operators in large sizes and at high operating pressures to overcome the operating torque. They are equipped with soft seats that conform readily to the surface of the ball and have a metal-to-meal secondary seal. If the valve is left partially open for an extended period under a high pressure drop across the ball, the soft seat may

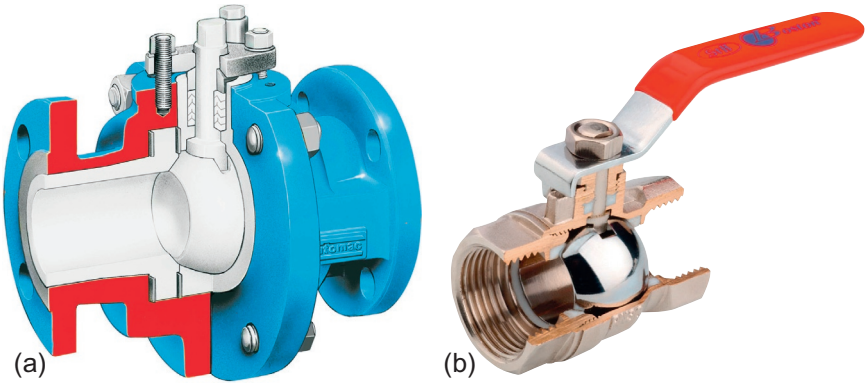

Figure 4.56 Rotary ball valve.

become damaged and may lock the ball in position. Ball valves are best suited for stopping and starting flow but may be used for moderate throttling. Compared with other valves with similar ratings, ball valves are relatively small and light.

Ball valve is the most used fluid shutoff valve in upstream oil and gas production facilities, both onshore and offshore. They are also used in fuel gas systems feeding furnaces. Plug valves present the following advantages:

- Resistance to high pressure
- Compact assembly
- Quick opening and closing
- Easy maintenance
- Can be easily actuated (electrical, pneumatic, or hydraulic actuator)
- Acceptable for pigging operation
- Low pressure drop
- Can be repaired in situ
- Adapted to the different hydrocarbon phases encountered (liquid, gas, and mixture).

Typical ball valve applications include the following:

- Pig valve: Launch and receive small scrapers
- Rising stem: High temperature and erosive fluids
- Q-ball: Flow control and low noise
- Compact DBB: Secure high pressure and/or long period shutoff. *Note:* DBB is a valve arrangement that provides positive isolation. The two (2) block valves in series are closed and the pipe segment between them is depressurized via the bleed valve.

4.2.8.3.2 Reduced port

Most ball valves have a reduced port with a venturi-shaped flow passage that is generally one pipe size smaller than the nominal valve size. The pressure drop through a reduced port valve is generally low enough that the additional cost of a full port valve is not justified.

4.2.8.3.3 Full port

Full port ball valves are required in applications such as hot tapping operations or in a line subject to pigging.

4.2.8.3.4 Operating considerations

Since ball valves open and close so quickly, ball valves may induce water hammer or surge pressures. The hollow ball may trap fluid in the closed position and may cause problems if the valve body is not vented. Abrasive solids suspended in the fluid flow may damage the seats and ball surface because the ball moves across the seats with a wiping motion.

Ball valves handling combustible or dangerous materials should be provided with an emergency seat seal. These emergency seat seals come into operation should the soft seals burn out in a fire (fire-safe). They consist normally of a secondary metal seat in close proximity to the ball so that the ball can float against the metal seat (or vice versa) after the soft seats have deteriorated. Packing materials should be capable of lasting through a fire. Ball valves are classified as either floating ball or trunnion-mounted types.

4.2.8.3.5 Floating ball

In the floating ball configuration, the ball is free to move in the lateral direction. Fluid pressure acting on the ball forces the ball into the seats, giving a tight seal (Figure 4.57). The floating ball is not used in high pressure and large sizes for two reasons. First, the high force of the ball against the seats can deform the seats and affect the low-pressure sealing characteristics of the valve. Second, the same force makes the valve difficult to operate, thus requiring a high torque to overcome the seating force at high-pressure differentials.

4.2.8.3.6 Trunnion-mounted

In the trunnion-mounted configuration, the ball rotates in a fixed position (Figure 4.58). The ball cannot move in the lateral direction because it is held in place by a shaft on the top and the bottom of the ball. The valve creates a seal by either fluid pressure forcing a floating seat ring against the ball or pro-stressing the seats and the ball. Stress can occur as a result of an interference fit between the ball and seal or as a result of a spring-type mechanism. The trunnion ball valve is easier to operate than the floating ball valve and is available in larger sizes and higher pressure classes.

4.2.8.3.7 Orbit ball valve

The orbit ball valve uses a rotating motion and cam action to create a seal (Figure 4.59). Operation requires several turns of the handwheel. With the valve in the open position, clockwise rotation of the handwheel causes the ball to rotate clockwise until the port through the ball is perpendicular to the flow stream. The ball is held away from the seat by the stem so as to avoid abrasion. The last few turns of the handwheel cause a cam surface on the stem to contact a matching surface in the ball to force the ball against the seat for a tight seal. This action makes the orbit valve easier to operate than other types of ball valves and suitable for moderately abrasive services. Orbit ball valves are popular in larger sizes where power operators are required, which are less expensive than an operator for a conventional quarter-turn ball valve.

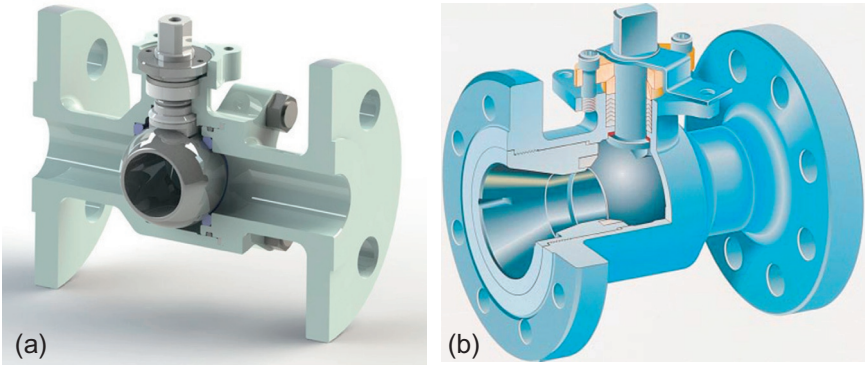

Figure 4.57 Floating ball valve.

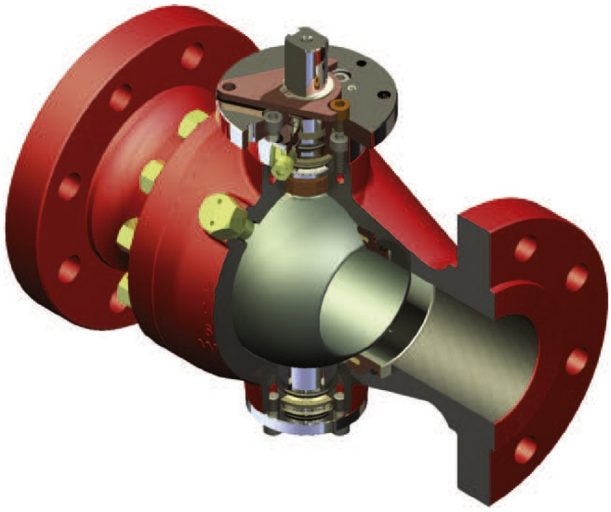

Figure 4.58 Trunnion-mounted ball valve.

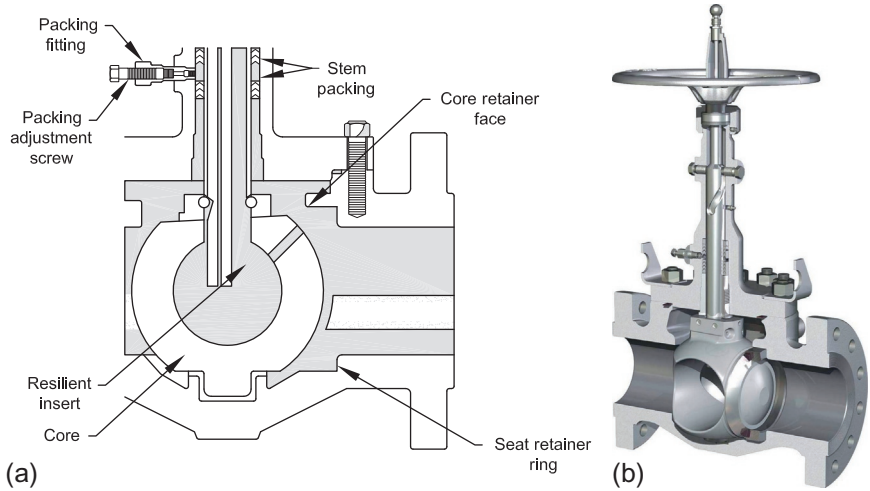

Figure 4.59 Orbit ball valve.
(Courtesy of Orbit, Inc.)

4.2.8.4 Globe valves

4.2.8.4.1 General considerations

Globe valves are valves in which the seating element (disk) is moved on and off perpendicular to the plane of the seat (Figure 4.60). Globe valves are built up to 6 in. (DN 150) to 8 in. (DN 200). The seat opening varies in direct proportion to

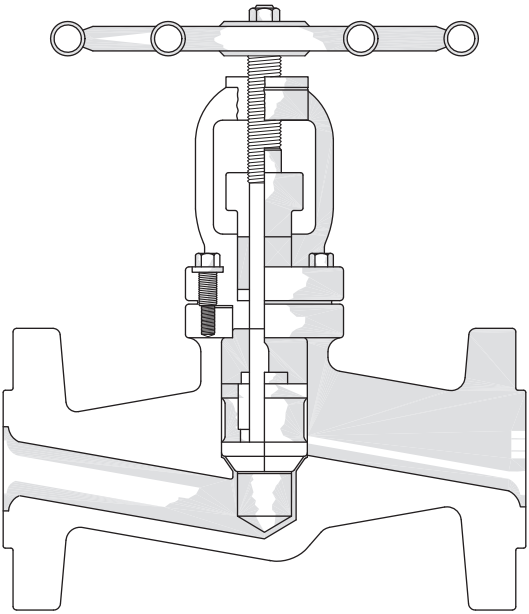

Figure 4.60 Standard pattern globe valve.
(Courtesy of Rockwell International)

the travel of the disk. Globe valves are well suited for applications requiring flow regulation. The seating load can be effectively controlled by the stem, thus giving the globe valve good sealing characteristics. Globe valves are generally used for

- throttling or control applications and where positive shutoff is required;
- on/off duty, provided the high resistance from the change in flow direction is not objectionable;
- applications that require the valve to be operated frequently due to the short travel of the disk between the open and closed positions; and
- applications requiring frequent valve maintenance since the diskj and seat can be replaced fairly rapidly and with minimum difficulty.

4.2.8.4.2 Patterns

4.2.8.4.2.1 Standard pattern The standard pattern is the most common pattern (Figure 4.60). The standard pattern has the highest resistance to flow of all patterns available.

4.2.8.4.2.2 Angle pattern The angle pattern is used when the valve is to be mounted near a pipe bend (Figure 4.61). It offers two advantages over the standard pattern:

- Reduced flow resistance
- Reduces the number of pipe joints and saves a pipe elbow

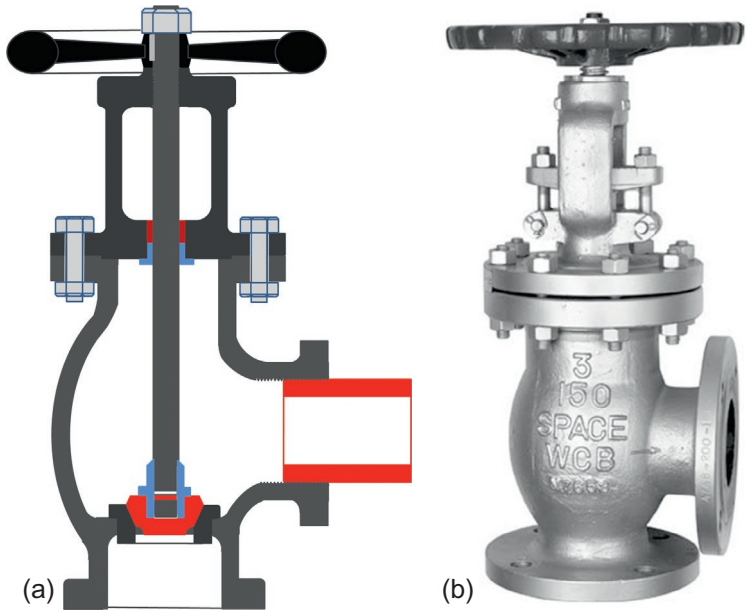

Figure 4.61 Angle pattern globe valve.
(Courtesy of Rockwell International)

4.2.8.5 Butterfly valves

4.2.8.5.1 General considerations

The butterfly valve is a rotary valve in which a disk-shaped seating element is rotated 90° to open or close the flow passage. They are used in throttling service, particularly where large-size valves with automatic actuators are required. Butterfly valves cannot be used where a nonobstructed, full opening is needed. They offer a size and weight advantage over plug and ball valves.

4.2.8.5.2 Types

4.2.8.5.2.1 Wafer-type The wafer-type butterfly valve is installed between two flanges. It requires both flanges to be in place (Figure 4.62).

4.2.8.5.2.2 Lug-type The lug-type butterfly valve is constructed with threaded lugs around the valve's circumference (Figure 4.63). This allows one flange to be removed and the valve can still operate for "dead end" service.

4.2.8.5.3 Classifications

4.2.8.5.3.1 Conventional Conventional butterfly valves are used mainly in low-pressure water service and throttling applications. The seats, disk, and shaft are in the same plane. The seat is obtained by an interference fit between the disk and resilient

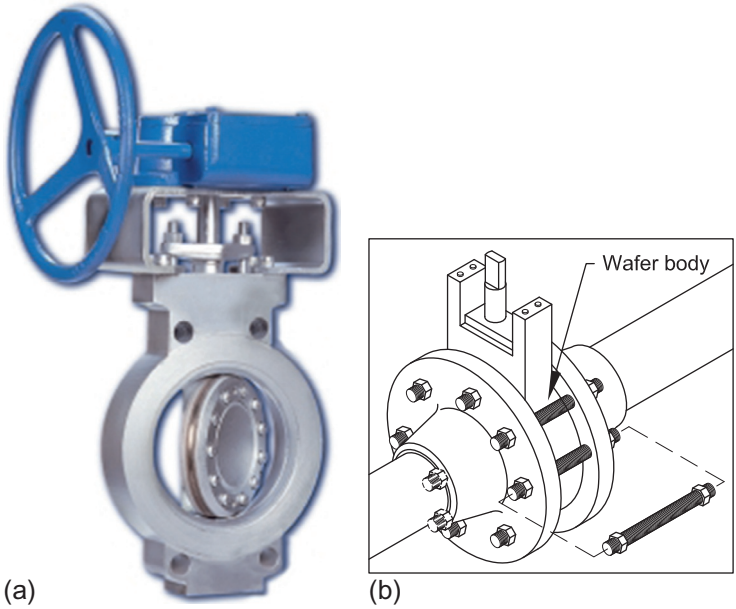

Figure 4.62 Wafer-type butterfly valve.
(Courtesy of Rockwell International and WKM)

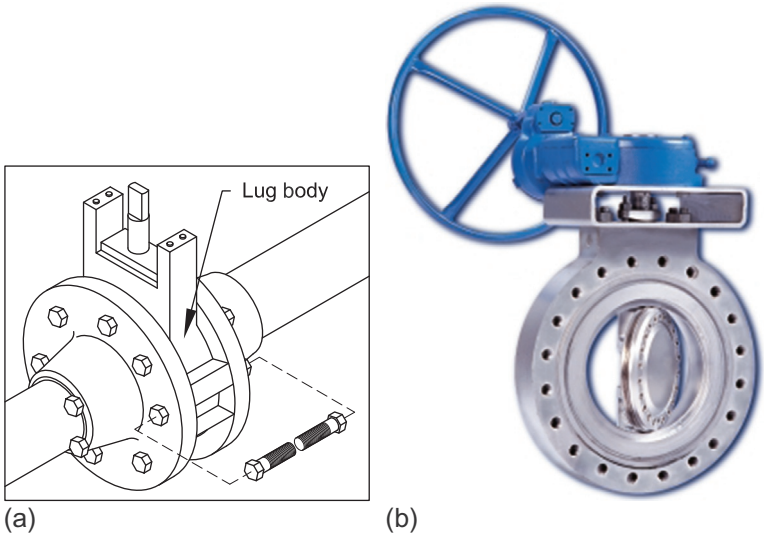

Figure 4.63 Lug-type butterfly valve.
(Courtesy of Rockwell International and WKM)

Figure 4.64 Conventional butterfly valve.

(flexible) liner. This type of fit is shown in Figure 4.64. The tightness of the seat is limited by the operating torque of valve and the seal between the shaft and the liner. The sealing characteristics of this valve are poor and leakage usually occurs.

4.2.8.5.3.2 High performance The high-performance butterfly valve provides good sealing characteristics and a tight shutoff. The disk is essentially an off-center slice of a ball, and the seating mechanism of this valve is similar to that of a ball valve. The disk and seats of this valve are offset from the shaft and shaft sealing in this valve is not critical. Many valves offer a primary seat made of a resilient material and a secondary metal-to-metal seal making them "fire-safe." High-performance butterfly valves are available in pressure classes as high as ANSI 900 and can be used in applications requiring tight shutoff.

4.2.8.6 Special-purpose valves

4.2.8.6.1 General considerations

Special-purpose valves are used where a specific or special function is required. Some functions include

- minimizing backflow,
- routing the flow of fluids through various flow systems,
- assuring a positive, leak-free seal.

In most cases, a typical block valve with certain modifications can function as a special-purpose valve. Special valves discussed in this section include the following:

- Check valves
- Diverter valves
- DBB valves

Control valves and pressure relief valves are a type of special-purpose valve and are discussed in another section.

4.2.8.6.2 Check valves

Check valves are self-actuating valves that minimize the reversal of fluid flow in a piping system. Fluid flow in the desired direction opens the valve, while backflow forces it closed. Check valves are used to

- minimize return flow into a system,
- enable reciprocating pumps and compressors to start at no load,
- prevent centrifugal pumps and compressors from operating in reverse when power is lost.

Check valves are used in lines feeding a secondary system in which the pressure can rise above the primary system. They are classified by the way the seating element moves onto the seat. Classifications include the following:

4.2.8.6.2.1 Swing check In the swing check valve, the seating element swings about a hinge that is mounted outside the seat. The disk swings freely in an arc with the flow area varying with the flow rate. The effect of gravity combined with the reversal of flow causes the disk to seat. As the size of the valve increases, the weight and travel of the disk become excessive for satisfactory valve operation. Thus, valves larger than 24 in. are designed with multiple disks. Swing check valves cause very little pressure drop and is best suited for low-velocity flow service where flow changes are infrequent. If used where high-frequency flow reversals are encountered (such as reciprocating compressor and pump service), the disk will have a tendency to chatter, which may damage the valve seats. Swing check valves are furnished in both regular and full opening pattern (Figure 4.65). The full opening pattern permits the passage of pigs in pipelines.

The regular swing check valve is not suitable if there is frequent flow reversal due to the pounding and wearing of the disk. For gritty liquids, a composition disk is advisable to reduce damage to the seat. Swing check valves may be mounted vertically with flow upward or horizontally. Vertically mounted valves have a tendency to remain open if the flow stream velocity changes slowly. An optional lever and outside weight may be used to assist closing or to counterbalance the disk in part and allow opening by low-pressure fluid.

4.2.8.6.2.2 Wafer check The wafer check valve is installed between regular pipe flanges. Wafer checks are used where space or weight limitations exist. They do not offer a full opening port. The wafer check valve provides closure by two semicircular "doors," both hinged to a central post in a ring-shaped body that is installed between

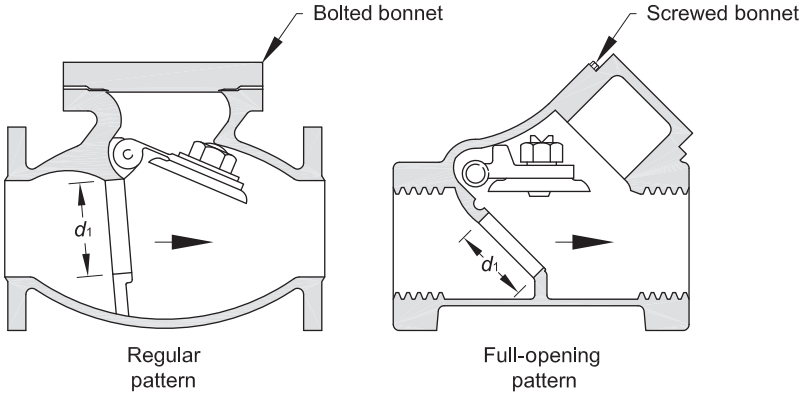

Figure 4.65 Swing check valves.
(Courtesy of Crane Supply)

flanges. They are frequently used for nonfouling liquids, as are compact and low cost. A single disk type is also available.

4.2.8.6.2.3 Split disk, wafer-type The split disk wafer check consists of two spring-loaded D-shaped sealing elements mounted on a rib across the valve bore. The design reduces the weight of the disk by about 50%, compared with single-disk swing check valves. Coupled with spring loading, this valve closes very rapidly.

4.2.8.6.2.4 Tilting disk check The seating element tilts about a hinge that is mounted near, but above, the center of the seat (Figure 4.66). The disk drops on the seat upon closing and lifts out upon opening. It exhibits quicker acting than swing check valves because the center of gravity of the disk halves describes only a short path between the fully open and the closed positions. They are more expensive and more difficult to repair than swing check valves. Tilting disk check valves are suitable where frequent flow reversal occurs. The valve closes rapidly with better closure and less slamming than the swing check valve, which it somewhat resembles. They have a higher pressure drop with large flow velocities and lower pressure drop with small velocities than the comparable swing check valve. They may be installed vertically with the flow upward or horizontally.

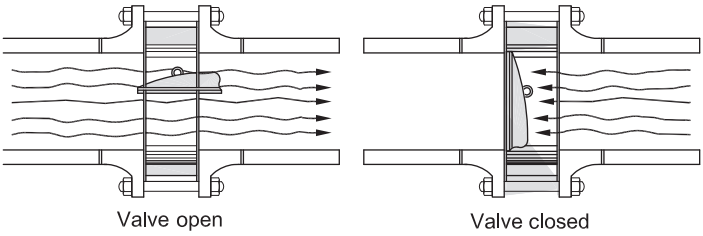

Figure 4.66 Tilting disk check valve.

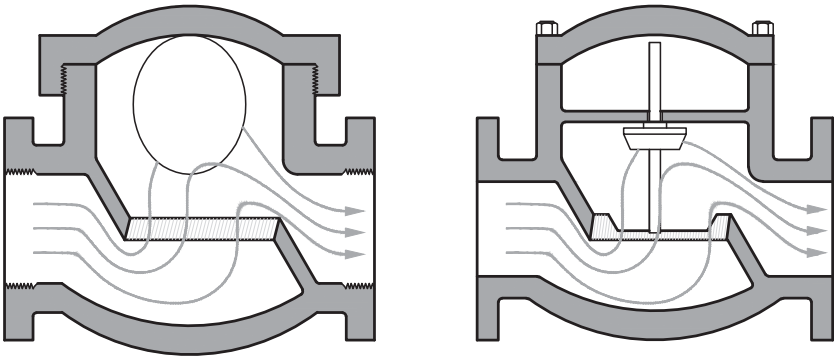

Figure 4.67 Lift check valve.

Tilting disk check valves are normally restricted to applications of low pressure and high flow rates, which cannot be met by the use of swing check valves. These valves cannot be used in lines that must be fully open.

4.2.8.6.2.5 Lift check The lift check resembles the piston check valve. The seating element travels in the direction normal to the plane of the seat. Flow follows a turning course through the valve (Figure 4.67). The disk is equipped with a short guide. Backflow and gravity contribute to seating of the disk and ball, which rise and fall depending on the pressure. Spring-loaded types can be operated in any orientation, but unsprung valves have to be arranged so that the disk will close by gravity. Because the travel lift check valves are shorter than other types of check valves, lift check valves are fast-closing. The lift check creates a larger pressure drop than swing check valves. They are suitable for services where

- frequent changes in flow direction are encountered,
- high-pressure differential can occur,
- low flow rates are involved.

4.2.8.6.2.6 Piston check Conventional check valves tend to wear out the seats or break the moving parts when subjected to pulsating flow created by reciprocating equipment. The piston check valve is suitable where frequent change of direction of flow occurs as these valves are much less subject to pounding with pulsating flow due to the integral dashpot. Spring-loaded types can operate in any orientation. Unsprung valves have to be orientated for gravity closure. These valves are not suitable for gritty service. In the piston check pattern, the seating element, a piston, rides up and down in a cylinder with flow surges (Figure 4.68). The piston settles on the seat to minimize backflow. The seating element (piston) contains a small port that vents the cylinder as the piston rises off its seat. When flow ceases, the pressure in the cylinder is less than pressure in the pipe and retards the speed with which the piston seats itself. The orifice plug can be sized to regulate the flow into the cylinder, creating the appropriate level of cushioning for a given pulsation condition. A pressure spring can be installed above the piston for instantaneous shutoff.

Figure 4.68 Piston check valve.

4.2.8.6.2.7 Diaphragm check The seating element consists of a diaphragm that deflects from or against the seat. Due to pressure and temperature limitations, these valves are normally not used in oil and gas operations.

4.2.8.6.3 Diverter valves

Diverter valves are used to route flow through various piping systems. The valve body contains three or more ports. Ball and plug valves adapt readily to multiport configurations. Figure 4.69 shows some of the flow variations possible with three- and four-way valves. Figure 4.70 shows the details of a three-way ball valve. The direction of flow through multiport valves should be such that the fluid pressure forces the seating element against the port, which is closed. If the pressure acts from the opposite direction, the valve will not seal properly. Diverter valves are commonly used on automatic well test headers and meter prover loops.

Figure 4.71 shows one of the most commonly used diverter valves used on automatic well test headers. The valve is constructed similar to a globe valve and is called a three-way, two-position, plunger and stem valve. Under normal operation, flow enters the common port and exits the upper port. Applying pressure to the valve diaphragm, the upper port is closed and flow passes from the common port to the lower port.

4.2.8.6.4 DBB valves

DBB valves are used where absolute isolation is required. They are used to make certain that the valve will positively shutoff flow with pressure from either end of the

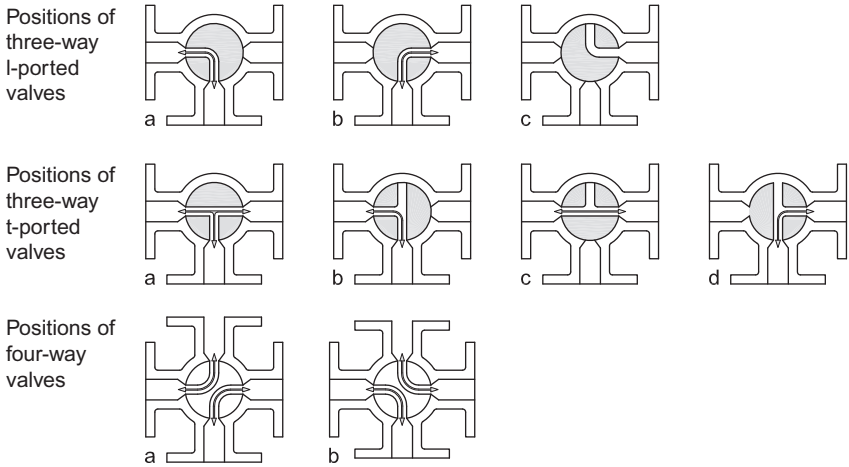

Figure 4.69 Flow variations for diverter valves.

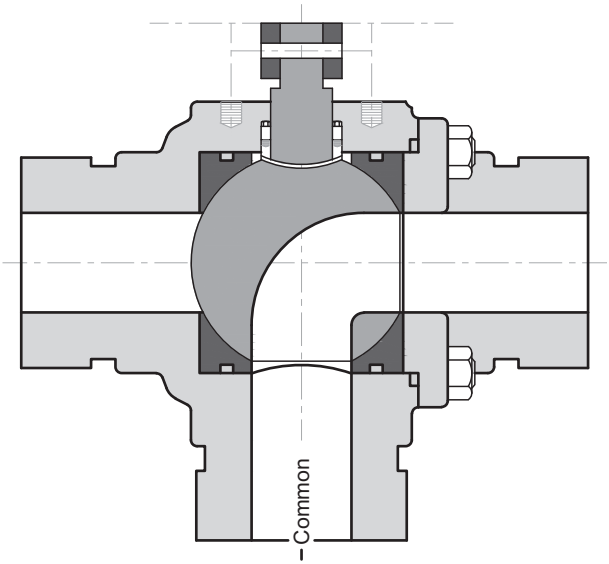

Figure 4.70 Three-way ball valve. (Courtesy of Charles Wheatley Company)

valve. With the valve in the closed position, the bleeder valve must be opened. DBB valves can be gate, plug, or ball type that seals on both sides of the sealing element while leaving the cavity of the valve void of any pressure. This allows the cavity of the valve to be bled by a small bleeder valve installed in the body of the main valve to provide proof of a tight seal.

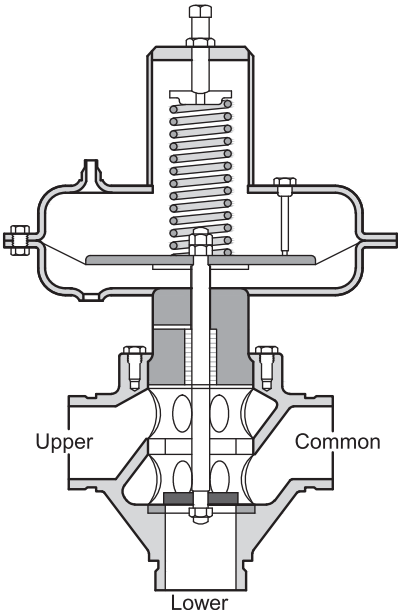

Figure 4.71 Three-way, two-position, plunger and stem valve.
(Courtesy of W.C. Morris Company)

4.2.9 Valve selection

4.2.9.1 Valve types

4.2.9.1.1 General considerations

The suitability of a valve for a particular service is decided by a valve's mechanical design and materials of construction. The steps in the selection are to choose the following:

- Material(s) of construction
- Disk type
- Stem type
- Means of operating the stem (operator type)
- Bonnet type
- Body ends (welding, flanged, screwed, etc.)
- Delivery time
- Price
- Performance guarantee

Table 4.6 is a guide to aid in valve selection and lists valves that may be used for a given service. The table should be read from left to right. First, determine the nature of the fluid that the valve will handle, for example, gas or liquid. Next, consider the nature of the fluid—whether the fluid is corrosive or neutral or noncorrosive. The next step is to consider the function of the valve—simple on/off or regulating service. Once

Table 4.6 **Valve selection guide**

Conveyed fluid	Nature of fluid	Valve functions	Type of disk	Special features (…) Denotes limitations, (…) Denotes options
Liquid	Neutral (water, oil, etc.)	On/off	Gate	None
			Rotary ball	None
			Plug	None
			Diaphragm	(For oil: no natural rubber)
			Butterfly	None
			Plug gate	None
		Regulating	Globe	None
			Butterfly	None
			Plug gate	None
			Diaphragm	(For oil: no natural rubber)
			Needle	None (small flows only)
	Corrosive (alkaline, acid, etc.)	On/off	Gate	Anti-corrosive[a] (OS&Y), (bellows seal)
			Plug gate	Anti-corrosive[a] (OS&Y)
			Rotary ball	Anti-corrosive[a] (lined)
			Plug	Anti-corrosive[a] (lubricated), (lined)
			Diaphragm	Anti-corrosive[a] (lined)
			Butterfly	Anti-corrosive[a] (lined)
		Regulating	Globe	Anti-corrosive[a] (OS&Y), (diaphragm or bellows seal)
			Diaphragm	Anti-corrosive[a] (lined)
			Butterfly	Anti-corrosive[a] (lined)
			Plug gate	Anti-corrosive[a] (OS&Y)
	Hygienic (beverages, food and drugs)	On/off	Butterfly	Special disk[b], white seat[b]
			Diaphragm	Sanitary lining, white diaphragm[b]
		Regulating	Butterfly	Special disk[b], white seat[b]
			Diaphragm	Sanitary lining, white diaphragm[b]
			Squeeze	White flexible tube[b]
			Pinch	White flexible tube[b]
	Slurry	On/off	Rotary ball	Abrasion-resistant lining
			Butterfly	Abrasion-resist, disk, resilient seat
			Diaphragm	Abrasion-resistant lining
			Plug	Lubricated (lined)
			Pinch	None
			Squeeze	Central seat

Table 4.6 Continued

Conveyed fluid	Nature of fluid	Valve functions	Type of disk	Special features (…) Denotes limitations, (…) Denotes options
		Regulating	Butterfly	Abrasion-resist, disk, resilient seat
			Diaphragm	Lined[a]
			Squeeze	None
			Pinch	None
			Gate	Single seat notched disk
	Fibrous suspensions	On/off and regulating	Gate	Single seat, knife-edged disk, notched none
			diaphragm	
			Squeeze	Disk
			Pinch	None
				None
Gas	Neutral (air, steam, etc.)	On/off	Gate	None
			Globe	(Composition disk), (plug-type disk)
			Rotary ball	None
			Plug	None (unsuitable for steam service)
			Diaphragm	None (unsuitable for steam service)
		Regulating	Globe	None
			Needle	None (small flows only)
			Butterfly	None
			Diaphragm	None (unsuitable for steam service)
			Gate	Single seat
	Corrosive (acid vapors, chlorine, etc.)	On/off	Butterfly	Anti-corrosive[a]
			Rotary ball	Anti-corrosive[a]
			Diaphragm	Anti-corrosive[a]
			Plug	Anti-corrosive[a]
		Regulating	Butterfly	Anti-corrosive[a]
			Globe	Anti-corrosive[a] (OS&Y)
			Needle	Anti-corrosive[a] (small flows only)
			Diaphragm	Anti-corrosive[a]
	Vacuum	On/off	Gate	Bellows seal
			Globe	Diaphragm or bellows seal
			Rotary ball	None
			Butterfly	Resilient seat

Continued

Table 4.6 Continued

Conveyed fluid	Nature of fluid	Valve functions	Type of disk	Special features (…) Denotes limitations, (…) Denotes options
Solid	Abrasive powder (silica, etc.)	On/off and regulating	Pinch Squeeze Spiral sock	None (Central seat) None
	Lubricating powder (graphite, talc, etc.)	On/off and regulating	Pinch Gate Squeeze Spiral sock	None Single seat (Central seat) None

[a]Suitability of materials of construction with respect to the great variety of fluids encountered is a complex topic. A good general reference is the current edition of the Chemical Engineer's Handbook.
[b]The disk should be smooth, without bolts and recesses, in a sanitary material such as stainless steel, or fully coated.

these factors are decided, Table 4.6 will then indicate types of valves that could perform satisfactorily in the required service.

Valve type is determined by the intended function of the valve. Valves have the following functions:

- Starting and stopping flow
- Regulating or throttling flow by change of direction or restriction
- Minimize backflow
- Relieving and regulating pressure

The secret to good valve performance is selecting the right valve for the service required.

4.2.9.1.2 Gate valves

Gate valves are used where a minimum of pressure drop through the valve is important. In addition, they are used for wide open or completely closed service. They are designed to permit either a straight, full, and free flow of fluid or no flow at all.

4.2.9.1.3 Globe valves

Globe valves are used to regulate or throttle fluid flow. They can be operated satisfactorily with the stem in any position from fully open to fully closed. A change in direction of fluid flow through the valve produces increased resistance and considerable pressure drop in globe valve.

4.2.9.1.4 Oblique valves

Oblique vales are sometimes called "Y" pattern or inclined stem valves and are a special type of globe valve. Oblique valves offer a near straightway passage and a near unobstructed flow approaching that of the gate valve and the throttling ability of the globe valve. They experience lower pressure drop across the valve than conventional globe valves.

4.2.9.1.5 Angle globe valves

Angle globe valves have the same features of stem, disk, and seat ring design as the globe valve (fluid flow makes a 90° turn). They offer less resistance to flow than a globe valve and elbow connection, which it would replace. It reduces the number of joints in a line and thus saves installation time.

4.2.9.1.6 Check valves

Check valves minimize reversal of the direction of flow through a line. They offer quick automatic reactions to flow changes. Pressure of the flowing fluid keeps the valve open, and any reversal of flow closes it.

4.2.9.1.7 Plug valves

Plug valves are used primarily for on/off, nonthrottling service. The advantages over gate valves are the following:

- Minimum amount of installation space
- Simple operation
- Quick-acting (90° rotation of the plug stops fluid flow)
- Tight shutoff characteristics of the tapered plug

4.2.9.1.8 Ball valves

Ball valves are used to shutoff or permit full flow of the fluid. They are quick-opening and easy to repair at low maintenance cost. They are available in reduced and full port patterns. Temperatures are limited by the seating material.

4.2.9.1.9 Butterfly valves

Butterfly valves are used for low-pressure shutoff or throttling valves of simple design. They may be furnished with resilient sleeves or with high-performance seat design. Butterfly valves are easy to install and are relatively inexpensive.

4.2.9.2 Factors modifying the valve type

4.2.9.2.1 Nature of the fluid handled

If the fluid contains solid particles, they will impinge on and erode valve parts that protrude into the flow stream; thus, through-flow valves are best for dirty service. Solids accumulate in cavities and interfere with the valve's moving parts; thus, this rules out the use of conventional gate valves and ball valves without double seats. Valve seats that fit the ball tightly will score the ball in dirty service.

High-temperature, volatile liquids and hot gases are very difficult to seal. The ability to provide a high seating force makes the tapered disk globe valve an excellent valve for this service. The inclined stem globe valve is particularly suited for high-pressure steam service as the flow pattern is streamlined compared with the double 90° change of direction in the regular globe valve. This minimizes the pressure loss when the valve is used as a block valve.

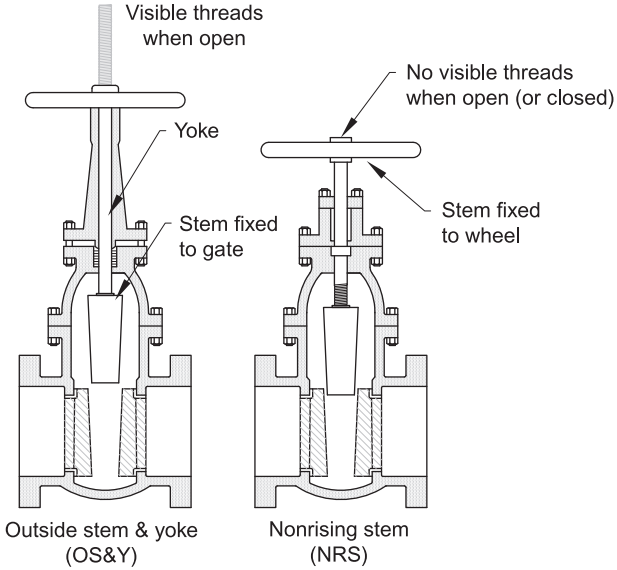

Figure 4.72 Valve stem positions.

The corrosiveness of the fluid influences the choice of valve type. To avoid damage to the screw of rising stem valves, the screw should be outside the valve body; this allows a sturdier connection between disks or gates and the stem of the gate and globe valves. To provide space for the screw outside the valve body, a yoke extends from the bonnet in the house to the stem screw. This construction is referred to as OS&Y, which means outside screw and yoke (refer to Figure 4.72).

4.2.9.2.2 Maintenance

The ability to service or repair a valve in the line is important. Some valves have a back-seating arrangement on the stem that allows stem packing to be replaced with the valve in service. In some valves, the plug-to-seat tolerance can be adjusted with the valve in service. In other valves, the defective parts can be replaced after depressing the system, by removing the bonnet or through a bottom opening.

4.2.9.2.3 Operating convenience

The need to open or close a valve rapidly may dictate valve type, such as manifold operation. Quarter-turn (90° open to closed position) valves readily meet this requirement. Valves requiring 7 to 14 turns would be undesirable. Remote operation of a valve should also be considered. Pressure differential across the seating element may result in excessive torque for operating the valve. Space limitations may control the type of valve operator chosen.

4.2.9.2.4 Pressure rating

The minimum pressure rating for a valve is fixed by the relief valve setting for the piping system involved. Valves on both ends of the system must have the same design pressure. As temperature rises, the strength of metals decreases. The rating of flanges for various temperatures can be found in ANSI B16.5 Code. For temperature derating of valves with other end connections, one needs to refer to the applicable code. The pressure ratings for valves at various temperatures can be in the relevant valve standard (e.g., API 6D or ASME B16.4). ASME B16.34 indicates that soft-seated valves are not required to have a pressure rating equal to their ASME class. Should full pressure rating be required, one must either specify this requirement on the purchase order or use metal seats.

4.2.9.2.5 Valve size

A valve will normally be the same size as the line in which it is installed. In some installations, a reduced size valve is often desirable when

- excess pressure is available and pressure loss is not critical,
- the valve location is crowded and a smaller valve improves operating convenience,
- the absence of vibration and bending movements prevents excessive bolt stress,
- a larger number of valves are required and sizeable savings can be realized without sacrifice of safety,
- the mechanical strength of the reduced size valve is adequate for stresses induced by thermal expansion or mechanical stress.

4.2.9.2.6 End connections

In general, the choice of end connections is set by company pipe, valve, and fitting specifications. End connection choice is influenced by size, service, pressure, and temperature.

4.2.9.2.6.1 Screw ends The minimum allowable wall thickness for all threaded pipe is Schedule 80.

½-1½ in.

- Unrestricted use through ANSI 900 pressure rating
- Used in piping in gas plants and compressor stations

2 in. and smaller

- Infield pipeline installations (outside *ASME B31.3* locations) up to 1000 psig MAWP
- Used in utility piping as per API RP 14E

2½, 3, and 3½ in.

- Used up to 500 psig MAWP at 350 °F maximum temperature

Screw-end piping used in service where vibration will occur:

- Connection should be made without thread lubricating sealant and then back-welded.
- A long tapered weld, covering all threads and extending a minimum of 3/8 in. from the valve, is used to melt the threads and form a continuous metal mass without points of stress concentration.

4.2.9.2.6.2 Socket-welded ends

- ASME B16.34 includes socket-welded valves up to ANSI class 4500.
- ASME B16.11 includes socket-welded ratings up to ANSI 9000.

Note: Do not assume ASME class 9000 is a higher pressure class than class 4000.
½-1½ in.

- Acceptable in the same services as threaded connections.
- ASME B1 6.5 does not list socket-welded fittings above ASME 1500 pressure rating.
- Socket varies from 0.39 to 0.63 in.

Clearances between the pipe and the socket are such (0.034 in. for ½ in. up to 0.053 in. for 1½ in. pipe) that the weld could be overstressed before the fitting provides assistance in resisting the strain caused by vibration.

When used in vibrating services, these valves must be braced to remove bending moments from the weld.

API RP 14E recommendations:

- Hydrocarbon service above ASME 600
- Hydrocarbon service above 200 °F
- Hydrocarbon service subject to vibration
- Glycol service

4.2.9.2.6.3 Flange ends Flanged valves may have several types of flange facings. Flat-faced flanges should be used for cast iron valve flanges. This eliminates the potential for breaking the flanges through bolt makeup as would occur if a raised face configuration were used. Breakage occurs because of the bending moment applied when the bolts are tightened. The use of raised face, ring joint, and tongue-and-groove end connections coincides with the piping system requirements discussed earlier.

API RP 14E recommends that flanges be used for

- hydrocarbon service,
- glycol service.

4.2.9.2.6.4 Butt-welded ends In high-pressure and high-temperature services, it is very difficult to maintain a flanged connection in a leak-proof condition. This is especially true when frequent temperature cycling occurs. Each time the bolts of a flange are heated and stressed, they are subject to creep, and after a relatively few cycles, a leak may develop. To avoid this, butt-welded end valves are used for high-pressure, high-temperature service. They are typically used in steam service.

4.2.9.2.6.5 Grayloc connectors Grayloc connectors are obtainable on most high-pressure valves. Valve manufacturer can machine this connector integral with the valve or weld the connector to a weld end valve. Unlike the flanged end connection, the Grayloc maintains its seal in thermal cycling conditions and withstands bending stresses extremely well.

Grayloc connectors are smaller and lighter than butt-welded flanges of the same class. In the lower pressure ratings (ANSI 150 through 900), the cost of the Grayloc

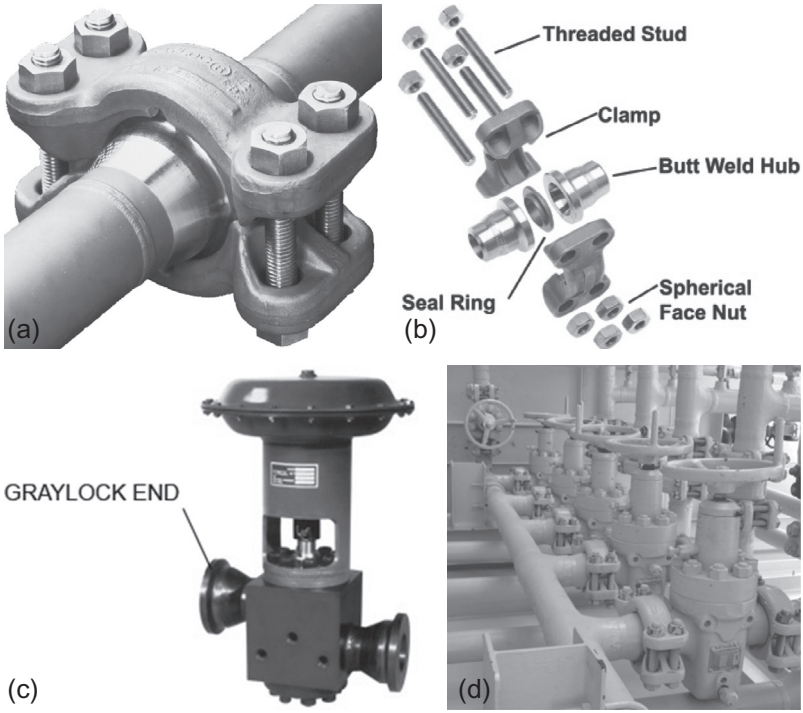

Figure 4.73 Grayloc connection.

fitting exceeds that of flanges; above this rating, they become competitive. Figure 4.73 shows a valve with Grayloc ends.

4.2.9.2.6.6 Other patented connectors There are several grooved pipe connectors available; the most commonly used is the Victaulic coupling. There are also valves that use ground lip unions as end connections. These types of valve connections are seldom used outside of noncritical services and are not addressed in this section.

4.2.10 Pressure loss through valves

4.2.10.1 Valve equivalent lengths

Pressure loss for valves of conventional design is shown in equivalent lengths of pipe in Figure 4.74. Equivalent lengths are used with insignificant error for general piping arrangements. If the selected valves are not conventional or if the system requires extremely accurate calculations to function properly, rigorous calculations may be required. This would be true for services such as reboiler line fed only by the head in a still column or stabilizer.

Equivalent length of valves and fittings in feet																							
Nominal Pipe Size in.	Globe valve of ball check valve	Angle valve	Swing check valve	Plug valve	Gate or ball valve	45° all	Short red. all	Long red. all	Branch of tee	Run of tee	90° miter bends			Enforcement					Contraction				
														Sudden			Std. red.		Sudden			Std. red.	
														Equiv. L In terms of small d									
						Weld thrd	Weld thrd	Weld thrd	Weld thrd	Weld thrd	2 miter	3 miter	4 miter	d/D= 1/4	d/D= 1/2	d/D= 3/4	d/D= 1/2	d/D= 3/4	d/D= 1/4	d/D= 1/2	d/D= 3/4	d/D= 1/2	d/D= 3/4
1 ½	55	26	13	7	1	1 2	3 5	2 3	8 9	2 3				5	3	1	5	1	3	2	1	1	---
2	70	33	17	14	2	2 3	4 5	3 4	10 11	3 4				7	4	1	6	1	3	3	1	1	---
2 ½	80	40	20	11	2	2 ..	5 ..	3 ..	12	3 ..				8	5	2	8	2	4	3	2	2	---
3	100	50	25	17	2	2	6	4	14	4				10	6	2	10	2	5	4	2	2	---
4	130	65	32	30	3	3	7	5	19	5				12	8	3	14	3	6	5	3	3	---
6	200	100	48	70	4	4	11	8	28	8				18	12	4	19	4	9	7	4	4	1
8	260	125	64	120	6	6	15	9	37	9				25	16	5	24	5	12	9	5	5	2
10	330	160	80	170	7	7	18	12	47	12				31	20	7	28	7	15	12	6	6	2
12	400	190	95	170	9	9	22	14	55	14	28	21	20	37	24	8	---	8	18	14	7	7	---
14	450	210	105	80	10	10	26	16	62	16	32	24	22	42	26	9	---	---	20	16	8	---	---
16	500	240	120	145	11	11	29	18	72	18	38	27	24	47	30	10	---	---	24	18	9	---	---
18	550	280	140	160	12	12	33	20	82	20	42	30	28	53	35	11	---	---	26	20	10	---	---
20	650	300	155	210	14	14	36	23	90	23	46	33	32	60	38	13	---	---	30	23	11	---	---
22	688	335	170	225	15	15	40	25	100	25	52	36	34	65	42	14	---	---	32	25	12	---	---
24	750	370	185	254	16	16	44	27	110	27	56	39	36	70	46	15	---	---	35	27	13	---	---
30	---	---	---	312	21	21	55	40	140	40	70	51	44										
36	---	---	---		25	25	66	47	170	47	84	60	52										
42	---	---	---		30	30	77	55	200	55	98	69	64										
48	---	---	---		35	35	88	65	220	65	112	81	72										
54	---	---	---		40	40	99	70	250	70	126	90	80										

Figure 4.74 Equivalent length of valves and fittings in feet.
(Courtesy of GPSA)

4.2.10.2 Calculation of pressure losses through a valve

From the previous discussion, valves should usually be the same size as the piping in which they are installed. Unless special considerations require a full opening valve (scraper or pig launching or receiving, minimum pressure drop required, meter proving, hot tapping, pump suction, etc.), regular port valves are acceptable.

The pressure drop across a valve, in liquid service, may be calculated from the following equation:

$$Q = C_v \sqrt{\frac{\Delta P}{SG}} \tag{4.1}$$

where

Q = liquid flow rate (gpm),
$\triangle P$ = pressure drop across the valve (psi),
SG = liquid specific gravity (water = 1),
C_v = valve coefficient, gpm of water flow at 60° through the valve with a 1 psi pressure drop across the valve.

The fluid flow and line sizing section demonstrated how to determine the equivalent length of valve fittings using the resistance coefficient method. Combining the Darcy equation with the pressure drop equation, the following relationship between C_v and equivalent length can be derived:

$$L_{eq} = 74.2\left(\frac{d^5}{f_D C_v^2}\right) \tag{4.2}$$

where

L_{eq} = equivalent length of valve (feet),
d = pipe inside diameter (inches),
f_D = Darcy friction factor, dimensionless,
C_v = valve coefficient.

C_v can also be related to the resistance coefficient by the following equation:

$$K = 894\left(\frac{d^4}{C_v^2}\right) \tag{4.3}$$

where

K = resistance coefficient, dimensionless,
$= \frac{f_D L_{eq}}{D}$,
D = pipe inside diameter (inches),
C_v = valve coefficient.

Example 4.1 *Valve equivalent length and resistance coefficient calculation*

Given:

A 4 in., Schedule 40 pipeline (d = 4.026 in.) with a 4 in. ball valve

Determine:

Calculate the equivalent length and resistance coefficient of the 4 in. ball valve having a $C_v = 600$

Solution:

The equation relating L_{eq} and C_v contains the term f_D. For a conservative answer, select f_D for turbulent flow.

From "Crane Technical Paper 410," page A-26, read $f_D = 0.017$.

Calculate equivalent length:

$$\begin{aligned} L_{eq} &= 74.2\left(\frac{d^5}{f_D C_v^2}\right) \\ &= 74.2\left(\frac{(4.026)^2}{(0.017)(600)^2}\right) \\ &= 12.8\,\text{ft.} \end{aligned}$$

Calculate resistance coefficient:

$$\begin{aligned} K &= 894\left(\frac{d^4}{C_v^2}\right) \\ &= 894\left(\frac{(4.026)^4}{(600)^2}\right) \\ &= 0.65 \end{aligned}$$

4.2.10.3 Calculation of friction factor

For piping other than clean commercial steel or for other sizes, the f_D for fully turbulent flow can be calculated form the following equation:

$$f_D = \left(-2\log_{10}\left(\frac{\varepsilon}{3.7d}\right)\right)^{-2} \tag{4.4}$$

where

ε = absolute roughness (feet),
= Table 4.7,
d = internal pipe diameter (feet) (ε/d is the relative roughness).

Table 4.7 Absolute roughness of pipe materials

Type of pipe (new, clean condition)	Absolute roughness ε (ft.)
Draw tubing—glass, brass, plastic	0.000005
Commercial steel or wrought iron	0.00015
Cast iron—asphalt dipped	0.0004
Galvanized iron	0.0005
Cast iron—uncoated	0.00085
Wood stave	0.0006-0.0003
Concrete	0.001-0.01
Riveted steel	0.003-0.03

The value of f_D can then be used to determine the equivalent length of the valve in its associated piping. For a valve in gas service, the following equation may be used to calculate pressure drop:

$$\Delta P = 941\left(\frac{Q_g^2}{C_v}\right)\left(\frac{(SG)T}{P}\right) \tag{4.5}$$

where

$\triangle P$ = pressure drop across the valve (psi),
Q_g = gas flow rate (MMSCFD),
C_v = valve coefficient,
SG = gas specific gravity (air = 1),
T = flowing temperature (°R),
P = flowing pressure (psia).

Considerable reduction in valve weight and cost can be realized through the selection of reduced ports. Regular port valves and venturi valves may have ports with flow areas between 50% and 70% of the full open flow area. Ports are generally oblong to provide maximum flow area while keeping the body compact and are commonly used in separation, process, treating stations, tank batteries, and manifolds where their higher pressure loss is not objectionable.

4.2.11 Materials of construction

4.2.11.1 General considerations

Material choice is controlled by the following:

- Service life desired
- Valve body material for pressure-temperature requirements
- Corrosivity of the fluid
- Thermal and physical shock

4.2.11.2 Procedure for material selection

- Select the valve body material for pressure-temperature requirements.
- Check this material for resistance to corrosion and modify as necessary.
- Evaluate the modified valve for its ability to withstand both thermal and mechanically induced shock.
- Trim material will be selected for corrosion and/or erosion resistance.

4.2.11.3 Evaluating corrosion resistance

Chemical analysis of the fluid and the operating pressure and temperature must be known. This information is used to modify valve body materials but it is most important for choosing valve trim.

4.2.11.4 Valve body materials

The majority of valve body materials can be placed in the following categories:

4.2.11.4.1 Steel

Steel is the most common valve body material for noncorrosive and mildly corrosive services. Carbon steel meeting the following requirements is satisfactory for valve bodies:

- API Standard 600
- API Specification 6A
- API Specification 6D
- ASME B16.5

4.2.11.4.2 Malleable iron

Malleable iron is used in noncritical services. Sometimes, it is used in production operations. It is not recommended for process plant use in hydrocarbon services where resistance to expansion and contraction or shock loads is important.

4.2.11.4.3 Cast iron

Cast iron is made with several different physical qualities, some of which are a brittle, porous material. When exposed to intense fire, it will burn. Mechanical shock loads will easily fracture cast iron. Refineries sometimes use cast iron in low-pressure steam heating services (below 450 °F). Upstream production operations restrict its use to air, water, and open drain service.

4.2.11.4.4 Nodular iron

Nodular iron resists thermal and physical shock and is generally corrosion-resistant. Nodular iron is new for valve construction although it is well known for its toughness and resistance to wear as a gear material. Any use of this material should be on a test basis.

4.2.11.4.5 Brass and bronze

Used in sizes 2 in. and smaller for

- utility services (such as air and water),
- steam and steam condensate at a maximum temperature of 450 °F.

Pressure ratings vary with operating temperatures
There are no ASME ratings for screwed bronze valves
Manufacturers have standardized on 125, 150, 200, 300, and 350 psig ratings
Not suitable for hydrocarbon service because they may fail on exposure to fire

4.2.11.4.6 Special alloys

Special alloys include molybdenum, vanadium, chromium, nickel, titanium, and other exotic metals. Special alloys are used where extremes in pressure, temperature, and

corrosion are encountered. Valves made of these alloys must be specially fabricated, and the help of a metallurgist is suggested for the selection of the proper alloy.

4.2.11.5 Valve trim materials

Trim denotes the stem, core, gate, disk, and seats (or seals). Material for each of these items is usually specified when selecting a valve and determined by the specific service. Some of the more common types of materials used for trim include carbon and stainless steels, cast iron, nodular iron, special alloys, Teflon, Buna-N, and other elastomers. Each of these materials exhibits different characteristics in the presence of various fluids. Conditions that may require special trim include the following:

- High or low temperature
- High pressure drop
- Erosive fluids (sand-laden)
- Corrosive fluids (CO_2, H_2S, etc.)
- Special chemicals (acid)

The manufacturer must be informed of any factors that affect the design of the valve to be furnished. Each valve manufacturer has developed a trim combination for handling the various oil field fluids. It is best to obtain the manufacturer's recommendations, and if experience does not dictate otherwise, specify that trim. If the service is particularly severe, the manufacturers recommended materials may be approved by a metallurgist or corrosion engineer.

4.2.11.6 Valve fabrication

Major processes for fabricating valve bodies include casting, forging, welding of plate or sheet steel, and machining of bar stock. Machining of valve bodies from bar stock is largely confined to small valves. Other methods of valve fabrication are used on all sizes of valves.

4.2.12 Valve standards

Valve standards assure uniformity of materials and dimensions among valve manufacturers. API has established standards for manufacture of wellhead and flow line valves (*API Specification 6A*) that cover standard sizes, dimensions, ratings, end connections, gaskets, materials and pertinent testing, marking, etc. These standards cover valves for pressure as high as 20,000 psi and flanges rated for 30,000 psi.

4.2.12.1 API Specification 6D

This specification covers piping valves. It has the same scope as *API Specification 6A*. Valves are classified according to the ANSI piping classes and use the flanges as specified in *ASME B16.5*. Pressure-temperature ratings of the valves are not necessarily the same as those listed in *ASME B16.5* and *ASME B16.34* (e.g., 1440 vs. 1480 psig). Some of the materials used in API 6D are not listed materials in *ASME B16.34*, and thus, none of the material groups apply (e.g., *ASTM A487 C1.4*).

4.2.12.2 API RP 6F

This recommended practice covers the procedures for fire-testing valves.

4.2.12.3 Other standards

Other standards cover valves used in refinery services such as (API Standards 593 to 609) plug, check, gate, ball, and butterfly valves. These standards also cover large-diameter carbon steel flanges and inspection and test procedures.

4.2.13 Design temperature

A valve's design temperature is determined by the maximum and minimum temperatures of the system. The source of this temperature may be the process or ambient conditions. For temperatures above +60 °F, add 50 °F up to and including 650 °F. For temperatures above 650 °F, a safety tolerance less than 50 °F can be used if it effects an appreciable savings without decreasing safety for temperatures below +60 °F, but above −50 °F, design must be a minimum of 5 °F below the lowest operating temperature. Below −50 °F, subtract 10 °F from the lowest temperature anticipated.

4.2.14 Valve characteristics

The following example illustrates how one determines a valve's characteristics:

Example 4.2 *Determining valve characteristics*

Given:

A well produces to a separation station at 1200 psig and 87 °F. The relief valve on the flow line is set at 1440 psig at 100 °F. The well produces gas that contains 3% hydrogen sulfide and 2% carbon dioxide. Production contains 20 bbls of condensate per MMSCFD. The flow line is 3 in. nominal diameter and the maximum sales gas contract pressure is 1000 psia.

Determine:

Determine the flow line manifold valve characteristics for the above conditions.

Solution:

(1) Select the valve type.
The purpose of this particular valve is to provide on/off flow. Refer to Table 4.7; all valves can serve as block valves. Sand and iron sulfide (H_2S reaction with mill scale and iron oxide) in the flow stream are abrasive. The quick-closing ability required for a manifold valve narrows the selection to a lubricated plug or a trunnion-mounted ball valve. These valves are comparable in price, but the dynamically balanced plug valve provides a better seal and has low torque requirements.
For sour service, the valve must have "NACE" trim; the best choice for this service is a 3 in. dynamically balanced plug valve, type: ¼-turn ball or plug block.
(2) Determine the valve size.
Established by the line size: 4 in.
(3) Determine the pressure rating.

Operating at 1200 psig and relief valve setting at 1440 psig require ANSI 600 design. Thus, the pressure rating is 1480 psig at 100 °F.

(4) Determine the design temperature:
87 °F + 50 °F = 137 °F. Since there is no heat source on this line, the 50 °F safety allowance is not necessary (engineering judgment). Thus, select a design temperature: 100 °F.

(5) Determine the end connections:
End connections: raised face flanges with Flexitallic gaskets

(6) Determine the bonnet type.
Critical service and over 2 in. valve size. Thus, select a bonnet: bolted.

(7) Determine the pressure loss.
Pressure loss: 200 psi available. Thus, use a regular trim, but do not reduce the valve size because a large velocity increase is not desirable with sand in the fluid.

(8) Determine the materials of construction.
Sour service. Thus, use materials: NACE specification.

(9) Determine the method of fabrication.
Fabrication: Cast or forged. For maximum hardness of material and sour service conditions, Brinell 235.

4.2.15 Valve accessories

Valves should be located so that they are easy to operate and are readily accessible and equipment can be isolated for maintenance without interrupting the operation of other connected units. Valves should not be installed underground unless absolutely necessary. Many piping systems require the installation of valves in locations that are not readily accessible. In these instances, it is necessary to add auxiliary equipment in order to operate the valve.

4.2.15.1 Stem extensions

Stem extensions extend or lengthen the stem of the valve, allowing it to be opened or closed from a convenient location. They are furnished on valves that are installed below grade or at elevations lower than the normal work platform.

4.2.15.2 Locking devices

Locking devices are provided on valves so that they may be locked in either the open or closed position (Figure 4.75). They are required on block valves that are installed beneath safety relief valves, locking the valve in the open position.

4.2.16 Valve cost

The only way to consider the influence of cost on valve selection is to obtain quotations. Table 4.8 provides a general idea of relative valve costs as of January 2015.

4.2.17 Other factors

Other factors to consider when selecting valves are the tightness of shutoff, the speed and frequency of operation, and the temperature limitations.

(a)

(b)

Figure 4.75 Valve locking devices.

Table 4.8 **Valve costs**

Size	ANSI 600 RF plug valve	ANSI 600 RF gate valve	ANSI 600 RF port ball valve
2″	$1820	$1075	$1365
3″	$2958	$1505	$1730
4″	$4095	$2480	$2483
6″	$8228	$4583	$4120

4.3 Pressure ratings

4.3.1 General considerations

When designing piping systems, one must consider piping components such as pipe flanges, fittings, and valves. These piping components must be able to withstand the stresses imposed by internal pressure. Unlike pipe, they are not straight cylinders but

are of complex geometry and require a detailed study in order to determine the pressures they can withstand. Rather than requiring every designer to perform finite element analysis on each component, industry has developed standards for pipe flanges, fittings, and valves. The goal of the standards is to provide interchangeability between manufacturers, set dimensional standards, specify allowable service ratings for pressure and temperature ranges, specify material properties, and specify methods of production and quality control.

ASME B 16.5 and API SPEC 6A/ISO 10423 specifications are the most commonly used. By specifying a specific pressure rating class that is rated for a pressure equalizing or exceeding the maximum working pressure of the particular piping system, the designer is assured that all flanges, fittings, and valves furnished by any manufacturer will contain the pressure and have interchangeable dimensions.

4.3.2 ASME B16.5

ASME B16.5 has seven classes of flanges: 150, 300, 400, 600, 900, 1500, and 2500. Historically, the class designation was the allowable working pressure at 850 °F (454 °C). For example, the 600 ASME class rating had a primary pressure rating of 600 psi (4128 kPa) at 850 °F (454 °C). For all other classes, the maximum nonshock pressure rating is higher at lower temperatures. Over time, and with the development of new materials, the meaning of the pressure rating classes has changed, and the class designation is no longer equal to the maximum working pressure.

Table 4.9 is a listing of the maximum allowable working pressure ratings for *Material Group 1.1*, as listed in *ASME B 16.5*. Material Group 1.1 includes most of the carbon steels commonly used in production facility piping. Tables 4.10–4.16 contain

Table 4.9 Maximum allowable non-shock working pressure Material Group 1.1

	MAWP						
Temp (°F)	**150**	**300**	**400**	**600**	**900**	**1500**	**2500**
−20 to 100	285	740	990	1480	2220	3705	6170
200	260	675	900	1350	2025	3375	5625
300	230	655	875	1315	1970	3280	5470
400		635	845	1270	1900	3170	5280
500		600	800	1200	1795	2995	4990
600		550	730	1095	1640	2735	4560
650		535	715	1075	1610	2685	4475
700		535	710	1065	1600	2665	4440
750		505	670	1010	1510	2520	4200
800		410	550	825	1235	2060	3430

Table 4.10 ASME 150 class pressure-temperature ratings

Mat'l group	1.1	1.2	1.3	1.4	1.5	1.7	1.9	1.10	1.13	1.14	2.1	2.2	2.3
Material temp. (°F)	Carbon steel				C 1/2 Mo	1/2 Cr-1/2Mo Ni Cr-Mo	1 1 1/2 Cr-1Mo	2 1/2 Cr-1/2 Mo	5 Cr-1Mo	9Cr-1Mo	Type 304	Type 316	Type 304 L/Type 316 L
−20 to 100	285	290	265	235	265		290				275	275	230
200	260	260	250	215			260				235	240	195
300	230	230	230	210			230				205	215	175
400						200					180	195	160
500						170					170		145
600						140					140		140
650						125					125		125
700						11					110		110
750						95					95		95
800						80					80		80
850						65					5		65
900						50					50		
950						35					35		
1000						20					20		

Pressure is in pounds per square inch, gage (psig).
Notes: (1) Ratings shown apply to other material groups where column dividing lines have been omitted. (2) Provisions of Selection 2 apply to all ratings. (3) Refer to ASME B16.5 for specific temperature limitations for all material groups.

2.4	2.5	2.6	2.7	3.1	3.2	3.4	3.5	3.6	3.7	3.8	
Type 321	**Type 347 348**	**Type 309**	**Type 310**	**Cr Fe Me Cu Cb 20 Cl_2**	**Nickel Alloy 200**	**Ni Cu Alloys 400 405**	**Ni Cr Fe Alloy 800**	**Ni Fe Cr Alloy 800**	**Ni Mo Alloy B2**	**Nickel Alloys**	**Temperature (°F)**
275	275	260		230	140	230	275	275	290		100
235	245	230		215	140	200	260	255	260		200
210	225	220		200	140	190	230	230	230		300
190		200			140	185		200			400
		170			140			170			500
		140			140			140			600
		125						125			650
		110						110			700
		95						95			750
		80						80			800
		65									850
		50									900
		35									950
		20									1000

Table 4.11 ASME 300 class pressure-temperature ratings

Mat'l group	1.1	1.2	1.3	1.4	1.5	1.7	1.9	1.10	1.13	1.14	2.1	2.2
Material temp. (°F)	Carbon steel				C 1/2 Mo	1/2 Cr-1/2Mo Ni Cr-Mo	1 1 1/2 Cr-1Mo	2 1/2 Cr-1/2 Mo	5 Cr-1Mo	9Cr-1Mo	Type 304	Type 316
−20 to 100	740	750	695	620	695	750	750	750	750		720	750
200	675	750	655	560	680	750	710	715	750		600	620
300	655	730	640	550	655	730	675	675	730		530	560
400	635	705	620	530	640	705	660	650	705		470	515
500	600	665	585	500	620	665	640		665		435	400
600	550	605	535	455			605				415	450
650	535	590	525	450			590				410	445
700	535	570	520	450			570				405	430
750	505	505	475	445			530				400	425
800	410	410	390	370			510		500	510	395	415
850		270					445		440	485	390	405
900		170					430		355	450	385	395
950		105			200	345	300		260	370	175	385
1000		50			165	215	125	270	190	290	325	365
1050						190	140	200	140	190	310	360
1100							95	115	105	115	260	325
1150							80	105	70	75	195	275
1200							35	85	45	50	155	205
1250											110	180
1300											85	140
1350											60	108
1400											50	75
1450											35	60
1500											25	40

Pressure is in pounds per square inch, gage (psig).
Notes: (1) Ratings shown apply in other inserted groups where column dividing lines are omitted. (2) Provisions of Selection 2 apply to all settings. (3) Refer to ASME B16.5 for specific temperature limitations for all material groups.

2.3	2.4	2.5	2.6	2.7	3.1	3.2	3.4	3.5	3.6	3.7	3.8	
Type 304 L/Type 316 L	**Type 321**	**Type 347 348**	**Type 309**	**Type 310**	**Cr Fe Me Cu Cb 20 Cl_2**	**Nickel Alloy 200**	**Ni Cu Alloys 400 405**	**Ni Cr Fe Alloy 800**	**Ni Fe Cr Alloy 800**	**Ni Mo Alloy B2**	**Nickel Alloys**	**Temperature (°F)**
600	720	720	670		600	360	600	720	720	750		100
505	610	635	605		555	360	530	670	660	750		200
455	645	590	570		525	360	495	640	625	730		300
415	495	555	535				480	615	600	705		400
300	460	520	505				480	595	580	665		500
360	435	490	480				480	575	575	605		600
350	430	480	465				80	565	570	590		650
345	420	470	455				480	555	565	570		700
335	415	460	445				470	530	530	530		750
330	415	455	435				460	510	505	510		800
320	410	445	425									850
	405	430	415									900
	485	385	365									950
	355	365	335	350								1000
	345	360	290	335								1050
	300	325	225	290								1100
	235	275	170	245								1150
	180	170	130	205								1200
	140	125	100	160								1250
	105	95	80	120								1300
	80	70	60	80								1350
	60	50	45	55								1400
	50	40	30	40								1450
	40	35	25	25								1500

Table 4.12 ASME 400 class pressure-temperature ratings

Mat'l group	1.1	1.2	1.3	1.4	1.5	1.7	1.9	1.10	1.13	1.14	2.1	2.2
Material temp. (°F)	Carbon steel				C 1/2 Mo	1/2 Cr-1/2Mo Ni Cr-Mo	1 1 1/2 Cr-1Mo	2 1/2 Cr-1/2 Mo	5 Cr-1Mo	9Cr-1Mo	Type 304	Type 316
−20 to 100	990	1000	925	825	925	1000	1000	1000	1000		960	960
200	900	1000	875	750	905	1000	950	955	1000		800	825
300	875	970	750	730	970	970	895	905	970		705	745
400	845	940	825	705	855	940	880	865	940		630	685
500	800	885	775	665	830	885	855		885		585	635
600	730	805	710	610			805				555	600
650	715	785	695	600			785				545	590
700	710	755	690	600			755				540	575
750	670	670	630	590			710				530	565
800	550	550	520	495			675		665	675	525	555
850		355					650		585	650	520	540
900		230					600		470	600	510	525
950		140			375	460	505		350	495	500	515
1000		70			220	285	300	355	255	390	430	485
1050						250	165	265	150	250	410	480
1100							130	150	140	150	354	430
1150							70	140	90	100	260	365
1200							45	75	60	70	205	275
1250											145	245
1300											110	185
1350											85	140
1400											65	100
1450											45	80
1500											30	55

Pressure is in pounds per square inch, gage (psig).
Notes: (1) Ratings shown apply in other inserted groups where column dividing lines are omitted. (2) Provisions of Selection 2 apply to all settings. (3) Refer to ASME B16.5 for specific temperature limitations for all material groups.

2.3	2.4	2.5	2.6	2.7	3.1	3.2	3.4	3.5	3.6	3.7	3.8	
Type 304 L/Type 316 L	**Type 321**	**Type 347 348**	**Type 309**	**Type 310**	**Cr Fe Me Cu Cb 20 Cl_2**	**Nickel Alloy 200**	**Ni Cu Alloys 400 405**	**Ni Cr Fe Alloy 800**	**Ni Fe Cr Alloy 800**	**Ni Mo Alloy B2**	**Nickel Alloys**	**Temperature (°F)**
800	960	960	895		800	480	800	960	960	1000		100
675	815	850	805		740	480	705	895	885	1000		200
605	725	785	760		700	480	660	850	830	970		300
550	660	740	710			480	635	820	800	940		400
510	610	690	670			480	635	790	770	885		500
480	585	655	635			480	635	765	765	805		600
470	570	610	620				635	750	760	785		650
460	560	625	610				635	745	750	755		700
450	555	615	595				625		710			750
440	550	610	580				610		675			800
430	545	590	555									850
	540	575	555									900
	515	515	515									950
	475	485	450	465								1000
	460	480	390	445								1050
	400	430	300	390								1100
	315	365	230	330								1150
	240	230	175	275								1200
	185	165	125	215								1250
	140	125	105	160								1300
	110	90	80	103								1350
	80	70	60	75								1400
	65	55	40	60								1450
	50	45	30	30								1500

Table 4.13 ASME 600 class pressure-temperature ratings

Mat'l group	1.1	1.2	1.3	1.4	1.5	1.7	1.9	1.10	1.13	1.14	2.1	2.2
Material temp. (°F)	Carbon steel				C 1/2 Mo	1/2 Cr-1/2Mo Ni Cr-Mo	1 1 1/2 Cr-1Mo	2 1/2 Cr-1/2 Mo	5 Cr-1Mo	9Cr-1Mo	Type 304	Type 316
−20 to 100	1480	1500	1390	1235	1390	1500	1500	1500	1500		1440	1440
200	1350	1500	1315	1125	1360	1500	1425	1430	1500		1200	1240
300	1315	1455	1275	1095	1305	1455	1345	1355	1455		1055	1120
400	1270	1410	1235	1060	1200	1410	1315	1295	1410		940	1030
500	1200	1330	1165	995	1245	1330	1285	1280	1330		875	955
600	1095	1210	1065	915			1210				830	905
650	1075	1175	1045	895			1175				815	890
700	1065	1135	1035	895			1135				805	865
750	1010	1010	945	885			1065				795	845
800	825	825	780	740			1015		995	1015	790	830
850		535					975		880	975	780	810
900		345					900		705	900	770	790
950		205			560	685	755		520	740	750	775
1000		105			330	425	445	535	385	585	645	725
1050						380	275	400	280	380	620	720
1100							190	225	205	225	515	645
1150							105	203	140	150	390	550
1200							70	110	90	105	310	410
1250											220	365
1300											165	275
1350											125	205
1400											90	150
1450											70	115
1500											50	85

Pressure is in pounds per square inch, gage (psig).
Notes: (1) Ratings shown apply in other inserted groups where column dividing lines are omitted. (2) Provisions of Selection 2 apply to all settings. (3) Refer to ASME B16.5 for specific temperature limitations for all material groups.

2.3	2.4	2.5	2.6	2.7	3.1	3.2	3.4	3.5	3.6	3.7	3.8	
Type 304 L/Type 316 L	**Type 321**	**Type 347 348**	**Type 309**	**Type 310**	**Cr Fe Me Cu Cb 20 Cl_2**	**Nickel Alloy 200**	**Ni Cu Alloys 400 405**	**Ni Cr Fe Alloy 800**	**Ni Fe Cr Alloy 800**	**Ni Mo Alloy B2**	**Nickel Alloys**	**Temperature (°F)**
1200	1440	1440	1345		1200	720	1200	1440	1440	1500		100
1015	1220	1270	1210		1115	720	1055	1345	1325	1500		200
910	1090	1175	1140		1045	720	990	1275	1250	1455		300
825	990	1110	1065			720	955	1230	1200	1410		400
765	915	1035	1010			720	950	1185	1155	1330		500
720	875	985	955			720	950	1145	1145	1210		600
700	855	960	930				950	1130	1140	1175		650
685	840	935	910				950	1115	1130	1135		700
670	830	920	895				935		1065			750
660	825	910	870				915		1015			800
645	815	890	850									850
	810	865	830									900
	775	775	775									950
	715	725	670	700								1000
	698	720	585	665								1050
	605	645	445	585								1100
	475	550	345	495								1150
	365	345	260	410								1200
	280	245	200	325								1250
	210	185	160	240								1300
	165	135	115	160								1350
	125	105	90	110								1400
	95	80	60	75								1450
	75	70	50	60								1500

Table 4.14 ASME 900 class pressure-temperature ratings

Mat'l group	1.1	1.2	1.3	1.4	1.5	1.7	1.9	1.10	1.13	1.14	2.1	2.2
Material temp. (°F)	Carbon steel				C 1/2 Mo	1/2 Cr-1/2Mo Ni Cr-Mo	1 1 1/2 Cr-1Mo	2 1/2 Cr-1/2 Mo	5 Cr-1Mo	9Cr-1Mo	Type 304	Type 316
−20 to 100	2220	2250	2085	1850	2085	2250	2250	2250	2250		2160	2160
200	2025	2250	1970	1685	2035	2250	2135	2150	2250		1800	1860
300	1970	2185	1915	1640	1955	2185	2020	2030	2185		1585	1680
400	1900	2115	1850	1585	1920	2115	1975	1945	2115		1410	1540
500	1795	1995	1745	1495	1865	1995	1925	1920	1995		1310	1435
600	1640	1815	1600	1370			1815				1245	1355
650	1610	1765	1570	1345			1765				1225	1330
700	1600	1705	1555	1345			1705				1210	1295
750	1510	1510	1420	1325			1595				1195	1270
800	1235	1235	1175	1110			1525		1490	1525	1180	1245
850		805					1460		1315	1460	1165	1215
900		515					1350		1060	1350	1150	1180
950		310			845	1030	1130		780	1110	1125	1160
1000		155			495	640	670	805	575	875	965	1090
1050						565	410	595	420	565	925	1080
1100							290	340	310	340	770	965
1150							155	310	205	225	585	825
1200							105	165	135	155	165	620
1250											330	545
1300											245	410
1350											185	310
1400											145	225
1450											105	175
1500											70	125

Pressure is in pounds per square inch, gage (psig).
Notes: (1) Ratings shown apply in other inserted groups where column dividing lines are omitted. (2) Provisions of Selection 2 apply to all settings. (3) Refer to ASME B16.5 for specific temperature limitations for all material groups.

2.3	2.4	2.5	2.6	2.7	3.1	3.2	3.4	3.5	3.6	3.7	3.8	
Type 304 L/Type 316 L	**Type 321**	**Type 347 348**	**Type 309**	**Type 310**	**Cr Fe Me Cu Cb 20 Cl_2**	**Nickel Alloy 200**	**Ni Cu Alloys 400 405**	**Ni Cr Fe Alloy 800**	**Ni Fe Cr Alloy 800**	**Ni Mo Alloy B2**	**Nickel Alloys**	**Temperature (°F)**
1800	2160	2160	2015		1800	1080	1800	2160	2160	2250		100
1520	1830	1910	1815		1670	1080	1585	2015	1990	2250		200
1360	1635	1765	1705		1570	1080	1485	1915	1870	2185		300
1240	1485	1665	1600			1080	1435	1845	1800	2115		400
1145	1375	1555	1510			1080	1435	1780	1735	1995		500
1080	1310	1475	1435			1080	1435	1720	1720	1815		600
1050	1280	1440	1395				1435	1690	1705	1765		650
1030	1260	1405	1370				1435	1670	1690	1705		700
1010	1245	1385	1340				1405		1595			750
985	1240	1370	1305				1375		1520			800
965	1225	1330	1275									850
	01215	1295	1245									900
	1160	1160	1160									950
	1070	1090	1010	1050								1000
	1040	1080	875	1000								1050
	905	965	670	875								1100
	710	825	515	740								1150
	545	515	390	620								1200
	420	330	300	485								1250
	320	280	235	360								1300
	245	205	175	235								1350
	185	155	135	165								1400
	145	125	95	115								1450
	115	105	70	70								1500

Table 4.15 ASME 1500 class pressure-temperature ratings

Mat'l group	1.1	1.2	1.3	1.4	1.5	1.7	1.9	1.10	1.13	1.14	2.1	2.2
Material temp. (°F)	Carbon steel				C 1/2 Mo	1/2 Cr-1/2Mo Ni Cr-Mo	1 1 1/2 Cr-1Mo	2 1/2 Cr-1/2 Mo	5 Cr-1Mo	9Cr-1Mo	Type 304	Type 316
−20 to 100	3705	3750	3470	3085	3470	3760	3780	3750	3750		3600	3600
200	3375	3750	3250	2810	3395	3750	3560	3580	3750		3000	3095
300	3280	3640	3190	2735	3260	3640	3365	3385	3640		2640	2795
400	3170	3530	3085	2645	3200	3530	3290	3240	3530		2350	2570
500	2995	3325	2910	2490	3105	3325	3210	3200	3325		2185	2390
600	2735	3025	2665	2285			3025				2075	2255
650	2685	2940	2615	2245			2940				2040	2220
700	2665	2840	2590	2245			2840				2015	2160
750	2520	2520	2365	2210			2660				190	2110
800	2060	2060	1955	1850			2540		2485	2540	1970	2075
850		1340					2435		2195	2435	1945	2030
900		860					2245		1765	2245	1920	1970
950		515			1405	1715	1885		1305	1850	1870	1930
1000		260			825	1065	1115	1340	960	1460	1610	1820
1050						945	685	995	705	945	1545	1800
1100							480	565	515	565	1285	1610
1150							260	515	345	380	980	1370
1200							170	275	225	260	770	1030
1250											550	910
1300											410	685
1350											310	515
1400											240	380
1450											170	290
1500											120	205

Pressure is in pounds per square inch, gage (psig).
Notes: (1) Ratings shown apply in other inserted groups where column dividing lines are omitted. (2) Provisions of Selection 2 apply to all settings. (3) Refer to ASME B16.5 for specific temperature limitations for all material groups.

2.3	2.4	2.5	2.6	2.7	3.1	3.2	3.4	3.5	3.6	3.7	3.8	
Type 304 L/Type 316 L	**Type 321**	**Type 347 348**	**Type 309**	**Type 310**	**Cr Fe Me Cu Cb 20 Cl_2**	**Nickel Alloy 200**	**Ni Cu Alloys 400 405**	**Ni Cr Fe Alloy 800**	**Ni Fe Cr Alloy 800**	**Ni Mo Alloy B2**	**Nickel Alloys**	**Temperature (°F)**
3000	3600	3600	3360		3000	1800	3000	3600	3600	3750		100
2630	3050	3180	3025		2785	1800	2640	3360	3310	3750		200
2270	2725	2940	2845		2615	1800	2470	3190	3120	3640		300
2065	2470	2770	2665			1800	2390	3070	3000	3530		400
1910	2290	2590	2520			1800	2375	2965	2890	3325		500
1800	2185	2460	2390			1800	2375	2870	2870	3025		600
1750	2135	2400	2330				2375	2820	2845	2940		650
1715	2100	2340	2280				2375	2785	2820	2840		700
1680	2075	2305	2230				2340	2660	2650	2660		750
1645	2065	2280	2170				2290	2540	2535	2540		800
1610	2040	2220	2125									850
	2030	2160	2075									900
	1930	1930	1930									950
	1785	1820	1680	1750								1000
	1730	1800	1460	1665								1050
	1510	1610	1115	1460								1100
	1185	1370	860	1235								1150
	910	855	650	1030								1200
	705	615	495	805								1250
	530	465	395	605								1300
	410	345	290	395								1350
	310	255	225	275								1400
	240	205	155	190								1450
	190	170	120	120								1500

Table 4.16 ASME 2500 class pressure-temperature ratings

Mat'l group	1.1	1.2	1.3	1.4	1.5	1.7	1.9	1.10	1.13	1.14	2.1	2.2
Material temp. (°F)	Carbon steel				C 1/2 Mo	1/2 Cr-1/2Mo Ni Cr-Mo	1 1 1/2 Cr-1Mo	2 1/2 Cr-1/2 Mo	5 Cr-1Mo	9Cr-1Mo	Type 304	Type 316
−20 to 100	6170	6250	5785	5145	5785	6250	6250	6250	6250		6000	6000
200	5625	6250	5470	4680	5660	6250	5930	5965	6250		5000	5160
300	5470	6070	5315	4560	5435	6070	5605	5640	6070		4400	4660
400	5280	5880	5145	4405	5330	5880	5485	5400	5880		3920	4280
500	4990	5540	4850	4150	5180	5540	5350	5330	5540		3640	3980
600	4560	5040	4440	3805			5040				3460	3760
650	4475	4905	4355	3740			4905				3400	3700
700	4440	4730	4320	3740			4730				3360	3600
750	4200	4200	3945	3685			4430				3320	3520
800	3430	3430	3260	3085			4230		4245	4230	3280	3460
850		2230					4060		3660	4060	3240	3380
900		1430					3745		2945	3745	3200	3280
950		860			2345	2860	3145		2170	3085	3120	32220
1000		430			1370	1770	1860	2230	1600	2430	2685	3030
1050						1570	1145	1660	1170	1570	2570	3000
1100							800	945	860	945	2145	2685
1150							430	860	570	630	1630	2285
1200							285	460	370	430	1285	1715
1250											915	1515
1300											685	1145
1350											515	860
1400											400	630
1450											285	485
1500											200	345

Pressure is in pounds per square inch, gage (psig).
Notes: (1) Ratings shown apply in other inserted groups where column dividing lines are omitted. (2) Provisions of Selection 2 apply to all settings. (3) Refer to ASME B16.5 for specific temperature limitations for all material groups.

2.3	2.4	2.5	2.6	2.7	3.1	3.2	3.4	3.5	3.6	3.7	3.8	
Type 304 L/Type 316 L	**Type 321**	**Type 347 348**	**Type 309**	**Type 310**	**Cr Fe Me Cu Cb 20 Cl_2**	**Nickel Alloy 200**	**Ni Cu Alloys 400 405**	**Ni Cr Fe Alloy 800**	**Ni Fe Cr Alloy 800**	**Ni Mo Alloy B2**	**Nickel Alloys**	**Temperature (°F)**
5000	6000	6000	5600		5000	3000	5000	6000	6000	6250		100
4220	580	5300	5040		4640	3000	4400	5600	5520	6250		200
3780	4540	4900	4740		4360	3000	4120	5320	5200	6070		300
3440	4120	4620	4440			3000	3980	5120	5000	5880		400
3180	3820	4320	4200			3000	3960	4940	4820	5540		500
3000	3640	4100	3980			3000	3960	4780	4780	5040		600
2920	3560	4000	3880				3960	4700	4740	4905		650
2860	3500	3900	3800				3960	4640	4700	4730		700
2800	3460	3840	3720				3000		4430			750
2740	3440	3800	3620				2820		4230			800
2680	3400	3700	3540									850
	3380	3600	3460									900
	3220	3220	3220									950
	2970	3030	2800	2915								1000
	2885	3000	2430	2770								1050
	2515	2685	1868	2430								1100
	1970	2285	1430	2060								1150
	1515	1430	1085	1715								1200
	1170	1030	830	1345								1250
	885	770	680	1000								1300
	685	570	485	660								1350
	515	430	370	460								1400
	400	345	260	315								1450
	315	285	200	200								1500

additional information for other material groups and for temperatures up to 1500 °F (815.6 °C). The pressure rating at any specific temperature above 100 °F (37.8 °C) can be determined by interpolation.

The pressure rating of a piping system is set either by the wall thickness of the pipe or by the pressure rating of the valves and fittings. Note that in *ASME B31.3*, the allowable stress for most commonly used steels in production facility piping systems is constant through 400 °F (204.4 °C), and in *ASME B31.8*, the temperature derating factor is 1.0-250 °F (121.1 °C). Thus, the pressure rating of a piping system may be set by the wall thickness of the pipe at low temperatures and by the pressure rating of the valves and fittings at a higher temperature.

Although an *ASME class 400* exists, it should not be used in production facility design. Valves and fittings in this class are not readily available and may cost more than those of *ASME class 600*. Table 4.17 lists hydrostatic test pressures for each of the ASME class ratings.

4.3.3 API SPEC 6A/ISO 10423

Like *ASME B 16.5, API SPEC 6A/ISO 10423* also has seven classes of flanges: 2000, 3000, 5000, 10,000, 15,000, 20,000, and 30,000. The API class designation is the maximum allowable working pressure rating at a specific temperature classification (Table 4.18) and a retained fluid rating (Table 4.19). For example, 2000 API class, with a temperature classification of "S," has a pressure rating at 140 °F (60 °C). API flanges are derated for temperature as shown in Table 4.20.

4.3.4 API versus ASME flanges

API SPEC 6A requires more stringent control and testing of the metallurgy and methods of manufacture than does *ASME B16.5*. As a result, even though API class 2000, 3000, and 5000 flanges have the same dimensions and are completely interchangeable with ASME class 600, 900, and 1500 flanges, respectively, they have a higher pressure rating. Any joint made by bolting an API flange to its ASME dimensional equivalent must be rated at the ASME pressure rating. API 10,000, 15,000, 20,000, and 30,000 series have no ASME series that are dimensionally equivalent.

API flanges are used in very high-pressure applications and are used on wellheads and flow lines near the wellhead. They are sometimes used on manifolds. ASME flanges are more readily available, less expensive, and normally used throughout the production facility. ASME flanges are sometimes used on manifolds.

4.4 Review questions

1. The disadvantages of threaded couplings are the following:
   a. Difficult to maintain leak-proof connections in large-diameter pipe

Table 4.17 **Hydrostatic test pressures**

Material Group	Shell test pressure by class-all pressures are gage													
	150		300		400		600		800		1500		2500	
	psi	bar	psi	bar	psi	bar	psi	bar	psi	bar	psi	bar	psi	bar
1.1	450	30	1125	78	1500	104	2225	154	3350	230	5575	383	9275	639
1.2	450	30	1125	78	1500	104	2250	156	3375	233	5625	388	9375	647
1.3	400	28	1050	72	1400	96	2100	144	3150	216	5225	360	8700	588
1.4	375	25	950	64	1250	86	1875	128	2775	192	4650	320	7725	532
1.5	400	28	1050	72	1400	96	2100	144	3150	216	5225	360	8700	599
1.7	450	30	1125	78	1500	104	2250	156	3375	233	5625	388	9375	647
1.9	450	30	1125	78	1500	104	2250	156	3375	233	5625	388	9375	647
1.10	450	30	1125	78	1500	104	2250	156	3375	233	5625	388	9375	647
1.13	450	30	1125	78	1500	104	2250	156	3375	233	5625	388	9375	647
1.14	450	30	1125	78	1500	104	2250	156	3375	233	5625	388	9375	647
2.1	425	29	1100	75	1450	100	2175	149	3250	224	5400	373	9000	621
2.2	425	29	1100	75	1450	100	2175	149	3250	224	5400	373	9000	621
2.3	350	24	900	63	1200	83	1800	152	2700	167	4500	311	7500	517
2.4	425	29	1100	75	1450	100	2175	149	3250	224	5400	373	9000	621
2.5	425	29	1100	75	1450	100	2175	149	3250	224	5400	373	9000	621
2.6	400	27	1025	70	1350	93	2025	140	3025	209	5050	348	8400	580
2.7	400	27	1025	70	1350	93	2025	140	3025	209	5050	348	8400	580

Table 4.18 API temperature ratings

Temperature classification	Operating range (°F) Minimum to maximum
K	−75 to 180
L	−60 to 180
M	−40 to 180
P	−20 to 180
S	0 to 180
T	0 to 180
U	0 to 250
X	0 to 350
Y	0 to 650

Table 4.19 Retained fluid ratings

Retained fluid classification[a]	Characteristic	Constituent ranges	
		CO_2[b]	H_2S[c]
A—General service	Noncorrosive	<7	<0.05
B—General service, low CO_2	Moderately corrosive	7-30	<0.05
C—General service, high CO_2	Highly corrosive	>30	<0.05
D—Sour service	Sulfide stress cracking	<7	>0.05
E—Sour service, low CO_2	Sulfide Stress cracking and moderately corrosive	7-30	>0.05
F—Sour service, high CO_2	Sulfide stress cracking and highly corrosive	>30	>0.05

[a]All retained fluid classifications include oil, water, and hydrocarbon gases.
[b]Partial pressure of CO_2, psia.
[c]Partial pressure H_2S (as defined by NACE-01-75), psia.

Table 4.20 Pressure-temperature ratings

	Temperature (°F)								
	0-250	300	350	400	450	500	550	600	650
Maximum allowable working pressure (psi)	2000 3000 5000	1955 2930 4880	1905 2860 4765	1860 2785 4645	1810 2715 4525	1735 2505 4340	1635 2455 4090	1540 2310 2850	1430 2145 3575

b. Threads reduce the pipe's wall thickness
c. Threads reduce the pipe's resistance to bending moments
d. All of the above
e. B and C only

2. (True or false) Socket-welded construction is preferred over butt-welded construction for joining small pipe.

3. The strongest of all pipe connections used for hydrocarbon service is _____.
a. threaded
b. butt-welded
c. bell and spigot
d. clamp
e. socket-welded

4. Bell and spigot connections are used primarily on _____.
a. low-pressure hydrocarbon systems
b. drains
c. sewage systems
d. all of the above
e. B and C only

5. The major purpose(s) of an elbow is (are) _____.
a. to reduce pressure drop
b. to provide change in direction
c. to provide a return
d. to combine flow
e. B and C only

6. The two types of reducers used to change pipe sizes are _____ and _____.

7. Match the following:

Slip-on flange	____	**a.** Provides great strength to the lap and provides easy bolt hole alignment of loose flanges on spherical surfaces
Screwed flange	____	**b.** Requires double fillet welds and should not be used on services with frequent thermal cycling
Blind flange	____	**c.** Restricted to small sizes and to low pressure and temperatures
Globack lap joint flange	____	**d.** Are used for connections on pressure vessels and heat exchangers
Long-welding neck flange	____	**e.** Used to blank off connections

8. If a pipeline of higher pressure-temperature connects to a pipeline of lower rating, the _____ rating flanges prevail up to and including the first block and check valve.

9. For operating services near raised flange rating or in possible flash-fire area, a _____ gasket should be used.
a. composition fiber
b. cloth
c. spiral metallic
d. ceramic
e. asbestos

10. The five basic types of block valves used in the petroleum industry are the following:
- **a.** _____
- **b.** _____
- **c.** _____
- **d.** _____
- **e.** _____

11. The most common service performed by valves is _____ and _____ flow.

12. Valve trim refers to _____.
- **a.** the valve pressure drop coefficient
- **b.** the stem, stem packing, seats, and seal elements
- **c.** the position of the restricting device
- **d.** the noise made by a valve under flow
- **e.** the valve porting size

13. Valves that meet API RP 6F are categorized _____.

14. (True or false) Gate valves primarily perform on/off, nonthrottling service.

15. A through conduit gate valve _____.
- **a.** is an excellent hot tap valve
- **b.** isolates the valve body cavity in the open and closed position
- **c.** can be used effectively for throttling service
- **d.** all of the above
- **e.** A and B only

16. The _____ gate valve can be used for throttling service.
- **a.** through conduit
- **b.** parallel
- **c.** butterfly
- **d.** plug disk
- **e.** dynamic balanced

17. The plug valve has (have) the following disadvantage(s):
- **a.** Slow-acting
- **b.** Short life and requires frequent lubrication
- **c.** High torque actuation
- **d.** All of the above
- **e.** B and C only

18. Globe valves _____.
- **a.** are suited for operations that require flow regulations
- **b.** have a disk seating element
- **c.** cannot provide adequate shutoff capabilities
- **d.** all of the above
- **e.** A and B only

19. Butterfly valves _____.
- **a.** are commonly used for throttling service
- **b.** in conventional designs are prone to leak
- **c.** are commonly used where an unobstructed, full opening is required
- **d.** all of the above
- **e.** A and B only

20. Ball valves _____.
- **a.** generally have reduced ports
- **b.** are best suited for on/off flow
- **c.** are quick-operating

d. all of the above
e. A and C only

21. (True or false) Floating ball valves should not be used for high-pressure service.

22. Check valves _____.
a. can be effectively used as a throttling device
b. are self-actuating
c. are similar to gate valves
d. prevent the reversal of flow
e. B and D only

23. Swing check valves _____.
a. are suited for high-velocity flow
b. produce a high pressure drop
c. can be used interchangeably with a butterfly valve
d. are generally pneumatically operated
e. none of the above

24. A valve used to route flow through various piping systems is a _____.
a. swing check valve
b. diverter valve
c. needle valve
d. tilting disk valve
e. diaphragm valve

25. For services where pulsating flow is encountered, the most commonly used check valve is the _____.
a. tilting disk valve
b. butterfly valve
c. gate valve
d. piston check valve
e. diaphragm valve

26. The valve size _____.
a. will normally be the same as the line size
b. has no effect on pressure loss
c. is measured in internal diameter dimensions
d. may be less than the line size when conditions permit
e. A and D only

27. The main advantage(s) of the Grayloc connector is (are) _____.
a. it is less expensive in lower pressure ratings than flanges
b. it maintains its seal in thermal cycling conditions
c. it can withstand bending stresses very well
d. all of the above
e. B and C only

28. For critical services, _____.
a. union bonnets are required for small valves (1½ in. and smaller)
b. it maintains its seal in thermal cycling conditions
c. it can withstand bending stresses very well
d. all of the above
e. B and C only

29. For critical services, _____.
a. union bonnets are required for small valves (1½ in. and smaller)
b. bolted bonnets are required for large valves

c. screwed bonnets are required in sour service
d. all of the above
e. A and B only

30. An operator that uses low-pressure air or gas to operate a _____.
a. piston operator
b. wrench operator
c. compression operator
d. diaphragm operator
e. spring operator

31. What are the three common processes by which steel pipe is manufactured?
a.
b.
c.

32. (True or false) Seamless pipe is used more than electric weld because it is a higher quality tube.

33. (True or false) Pipe is best identified by specifying outside diameter, wall thickness, and grade of steel.

34. What are the common types of nonmetallic pipe available?
a.
b.
c.

35. (True or false) All components of a manifold must be rated for maximum predicted wellhead shut-in pressure.

36. (True or false) Field construction of screwed connection manifolds is a design practice preferred to expedite installations.

37. (True or false) Field piping designs allow more pressure drop from friction than piping within a plant site.

38. (True or false) Increasing oil field use of RFP pipe is caused by its cheaper installed cost, noncorrosive behavior, lighter weight, and ease of handling.

39. A _____ is a piping system in which multiple inlet streams mix to form a single outlet stream.
a. separation station
b. manifold
c. transmission line
d. pumping station
e. gathering system

40. A cross-country line used to transport gas is called a _____.
a. gathering line
b. separation line
c. transmission line
d. flow line
e. compression line

41. The lines leaving the field gas separation facility for the gas plant constitute a _____.
a. transmission line
b. compression system
c. manifold
d. flow line
e. gathering system

Further Reading

[1] M. Frankel, Facility Piping Systems Handbook, McGraw Hill, Inc, 1995. New York.
[2] Pipe Fitters Handbook, Grinnell Supply Sales Company 1966.
[3] M.L. Nayyar, Piping Handbook, McGraw-Hill, Inc, 1992.
[4] NAVCO Piping Datalog, National Valve and Manufacturing Company, Pittsburgh, PA.
[5] E. Avallone, T. Baumeister, Marks' Standard Handbook for Mechanical Engineers, 2008 McGraw-Hill.
[6] Codes and Standards Training Institute (CASTI), ASME Piping Codes.
[7] ASME B31.1, Standard for Power Piping, ASME, New York City, 2012.
[8] ASME B31.3, Standard for Process Piping, ASME, New York City, 2012.
[9] ASME B31.4, Standard for Liquid Transportation Systems for Hydrocarbons, Liquid Petroleum Gas, Anhydrous Ammonia and Alcohols, ASME, New York City, 2012.
[10] ASME B31.8, Standard for Gas Transmission and Distribution Piping Systems, ASME, New York City, 2012.
[11] API RP 14E, Recommended Practice for the Design and Installation of Offshore Production Platform Systems, API, Washington, DC, 2007.
[12] ASME B16.5, Standard for Steel Pipe Flanges and Flanged Fittings NPS ½ Through NPS 24 Metric/Inch, ASME, New York City, 2003.
[13] API Specification 6A, Specification for Wellhead and Christmas Tree Equipment, 19th ed., API, Washington, DC, 2004.
[14] ASME B16.11, Standard for Forged Steel Fittings, Socket Welding, and Threaded, ASME, New York City, 2012.
[15] NACE MR-01-75, Standard Material Requirements – Metals for Sulfide Stress Cracking and Stress Corrosion Cracking Resistance in Sour Gas Oilfield Equipment for Sulfide Stress Cracking Resistant Metallic Material for Oilfield Equipment, NACE, Houston, 2012. Sections 3 and 5.
[16] The 2013 ASME Boiler and Pressure Vessel Code, Section VIII, IX, ASME, Fairfield, New Jersey, 2013.
[17] ASME SPEC 6F, Technical Report on Performance of API and ASME End Connections in a Fire Test According to API Specification 6A, third ed., API, Washington, DC, 2012.
[18] ASME SPEC 6FA, Specification for Fire Testing Valves, third ed., API, Washington, DC, 1999.
[19] API RP 14J, Recommended Practice for Design and Hazard Analysis of Offshore Production Facilities, second ed., API, Washington, DC, 2001.
[20] API RP 14C, Recommended Practice for Analysis, Design, Installation, and Testing of Basic Surface Safety Systems for Offshore Production Facilities, seventh ed., API, Washington, DC, 2001.
[21] ASME Standard A53, Standard for Seamless Carbon Steel Pipe for High Temperature Service, ASME, New York City, 2002.
[22] ASME Standard A106, Standard for Seamless Carbon Steel Pipe for High Temperature Service, ASME, New York City, 2002.
[23] API Standard 5L, Specification for Line Pipe, 19th ed., API, Washington, DC, 2004.
[24] ASME Standard B16.9, Standard for Factory Made Wrought Steel Butt-Welding Fittings, ASME, New York City, 2013.
[25] ASME Standard A105, Standard for Carbon Steel Forgings for Piping Applications, ASME, New York City, 2012.

[26] ASME Standard A234, Standard Specification for Pipe Fittings of Wrought Iron Carbon Steel and Alloy Steel for Moderate and Elevated Temperatures, ASME, New York City, 2012.
[27] ASME Standard A420, Standard Specification for Pipe Fittings of Wrought Carbon Steel and Alloy Steel for Low Temperature Service, ASME, New York City, 2012.
[28] ASME Standard A694, Carbon and Alloy Steel for Pipe Flanges, Fittings, Valves and Parts for High Pressure Transmission Services, ASME, New York City, 1998.
[29] API Standard 6D, Standard Specification for Steel Gate, Plug and Check Valves for Pipeline Service, API, Washington, DC, 1998.
[30] API Standard 6H, Standard Specification for End Closures, Connections, and Swivels, API, Washington, DC, 1998.
[31] MSS Specification 44, Specification for Steel Pipeline Flanges, Manufacturer's Standardization Society of the Valves and Fittings Industry Inc, Vienna, Virginia, 1998.
[32] MSS Specification 75, Specification for High Test Wrought Butt Welding Fittings, Manufacturer's Standardization Society of the Valves and Fittings Industry Inc, Vienna, Virginia, 1998.
[33] NACE Standard MR01-76, Standard Specification for Metallic Materials for Sucker Rod Pumps for Corrosive Oilfield Environments, NACE, Houston, 2000.
[34] NACE RP 200, Recommended Practice for Steel Cased Pipeline Practices, NACE, Houston, 2003.
[35] NACE RP 572, Recommended Practice for Design, Installation, Operation, and Maintenance of Impressed Current Deep Ground Beds, NACE, Houston, 2003. Sections 3 and 5.
[36] API Standard 1104, Standard Specification for Welding of Pipelines and Related Facilities, 19th ed., API, Washington, DC, 1999.
[37] API Standard 571, Standard Specification for Piping Code-Inspection, Repair, Alteration and Re-Rating of In-Service Piping Systems, second ed., API, Washington, DC, 1999.
[38] API Standard 574, Standard Specification for Inspection Practices for Piping System Components, second ed., API, Washington, DC, 1999.
[39] B. Wilson, Detail Engineering and Layout of Piping Systems, second ed., (2010).
[40] A. Parisher Roy, A. Rhea Bobert, Pipe Drafting and Design, third ed., Gulf Professional Publishing, Houston, Texas, 2012.
[41] C. Becht IV, Process Piping: The Complete Guide to ASME B31.3, third ed., ASME Press, New York, 2009.
[42] D.R. Sherwood, J. Whistance Dennis, The Piping Guide, Syentek Book Company, 1991.
[43] Piping Engineering, Tube Turns Inc. sixth ed., 1986.
[44] L.-C. Peng, T.-L. Peng, Pipe Stress Engineering, ASME Press, New York, 2009.
[45] B. Silowash, Piping Systems Manual, McGraw Hill, New York, 2010.
[46] Control Valve Handbook, Fisher-Rosemount, 1999.

Engineering drawings: data sheets and symbols

5

5.1 Engineering drawings

5.1.1 Flow diagrams

The flow diagram is used by the piping department to develop and layout the process equipment. When developing the layout, the arrangement of the mechanical equipment in the facility reflects, in part, the logical sequence of flow depicted on the flow diagram. However, many other factors such as code requirements, client standards and preferences, worker safety, and cost influence the positioning of equipment.

Once the layout drawing is finalized, the piping engineer and/or designer routes the pipe between the various pieces of mechanical equipment as indicated by the flow diagram using project specifications, standards, and accepted design practices. The flow diagram is usually "yellowed out" as each line is completed and incorporated into the design.

5.1.2 Type of flow diagrams

Process engineers are responsible for developing flow diagrams. In most large engineering firms, an entire department is dedicated to the development of flow diagrams. Today almost all flow diagrams are laid out with CAD drafting software or a 3-D plant modeling software program that has a flow diagram package included. Although there are various types of flow diagrams used during the design phase, we will concentrate on the block diagram, process flow diagram (PFD), piping and instrument drawing, utility flow diagram (UFD), layout/equipment arrangement drawing, piping drawings, structural drawings, electrical one-line drawings, and instrument data sheets.

5.1.2.1 Block diagram

The block diagram describes the "known" scope during phase 1 of a project. The block diagram develops a process into specific descriptions and recommendations for equipment. It shows the flow path by single lines, and process equipment is represented by simple figures such as rectangles and circles. Types and arrangements of equipment would be studied, and a design philosophy established. Often, notes related to the process equipment and piping with regard to the process are shown. The block diagram is not drawn to scale. The desired spatial arrangement of equipment and piping may be broadly indicated. Figure 5.1 is a simple block diagram for a field where all the functions are performed at one location. Usually, the block diagram is not used after the initial planning stage, but serves to develop the PFD that then becomes the primary reference.

Surface Production Operations. http://dx.doi.org/10.1016/B978-1-85617-808-2.00005-5
Copyright © 2016 Elsevier Inc. All rights reserved.

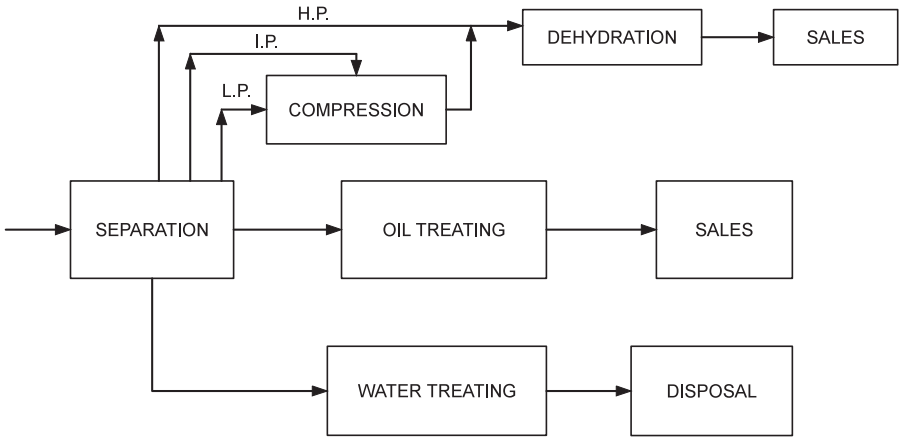

Figure 5.1 Typical oil facility block diagram.

5.1.2.2 Process flow diagram

The block diagram is converted into a PFD, sometimes called the "process flowsheet," so as to better define the process. The purpose of the PFD is to present the "big picture" of the facility. The PFD is prepared by the process engineer. It is based on information included on the preliminary block diagram, and it further describes the project scope of the project during phase 2 of a project. The PFD shows all major equipment, the flow path of the process fluid, and operating conditions (flow rates, temperatures, and pressures) at each step of the process and the material balance through the process. It includes main piping with flow arrows and shows operation pressure and temperature of the piping and equipment. The major instrumentation that controls the main process flow is shown and every major line is assigned a stream number. A table is included listing pertinent design data for these streams. Data to be listed include flow rates, pressures, temperatures, specific gravities, and other properties when required.

The PFD should state the materials to be handled by the piping, valves, fittings, etc. and specify their rates of flow and other data such as temperature and pressure. This information may be "flagged" on lines within the diagram or be tabulated in a table.

Normally, a PFD is prepared for each process within the facility. If a single flowsheet would be too crowded, two or more sheets may be used. For simple processes, more than one may be shown on a single sheet. Main process flows should preferably be shown going from left to right on the flowsheet. Critical internal parts of vessels and other items to the process should be indicated.

Process equipment identification should be written either near the top or near the bottom of the sheet, directly either above or below the process equipment. It must be emphasized in presentation is of utmost importance.

Figure 5.2 is a PFD that shows a representative oil and gas handling facility from inlet manifold to the outlet liquid and gas line. The PDF contains a detailed description of the process variables in oil and gas conditioning units. Stations in the process are

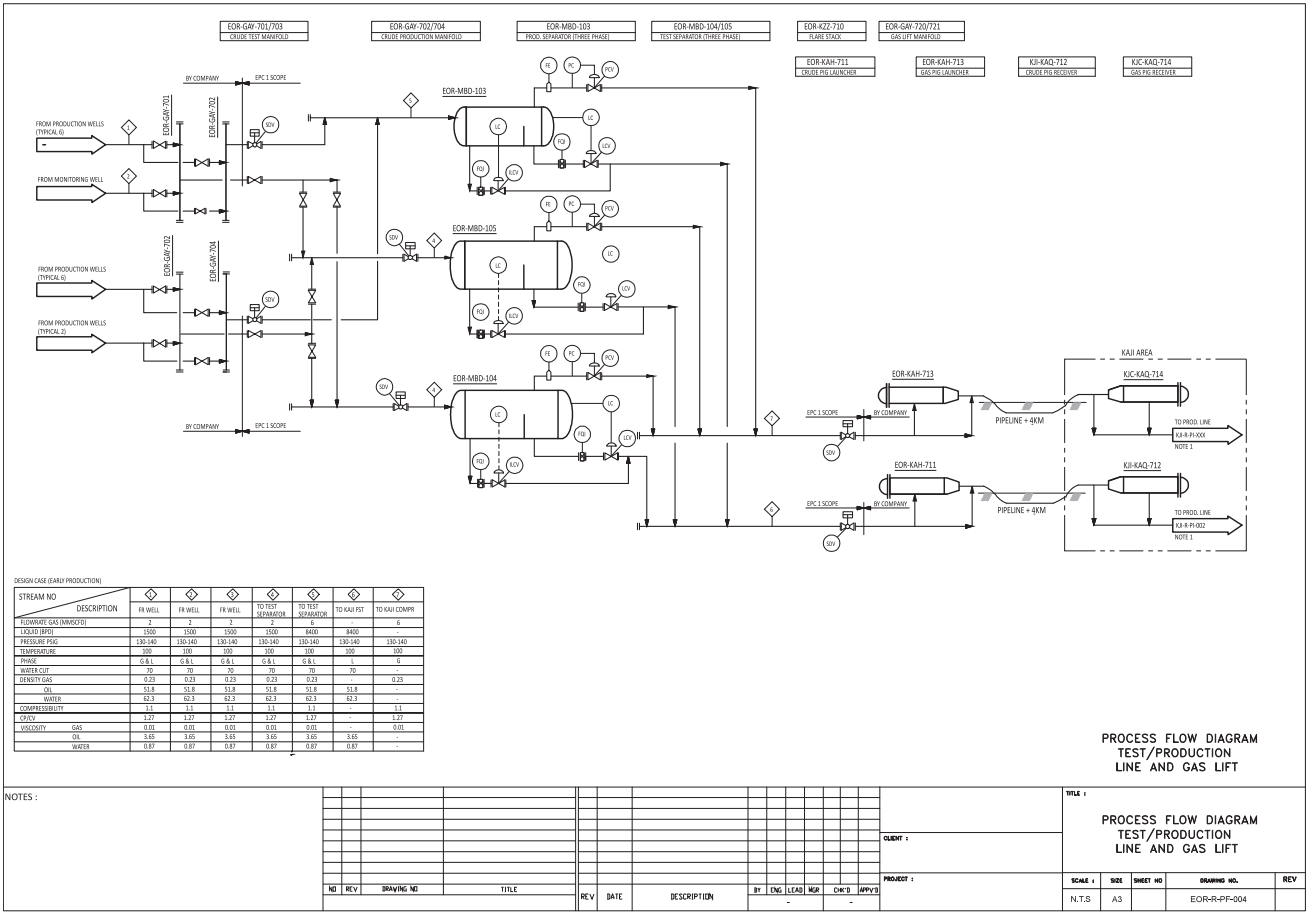

Figure 5.2 Process flow diagram (PFD).

labeled with a number enclosed in a diamond. The process variables, temperature, flow rate, and specific gravity are shown for each of the labeled stations.

As shown in Figure 5.2, the material balance (table at the bottom of the diagram) shows the amount of production entering the facility, process fluids circulating, and the quantity of product leaving the facility by process components. The material balance accounts for 100% of the inlet process material.

Arrows on the lines indicate the direction of flow. The PDF is symbolic and conveys the steps in the process for which the facility is designed.

5.1.2.3 Piping and instrument diagrams

The piping and instrument diagram (P&ID), also called the mechanical flow diagram, is prepared by the process engineer and is the road map for completing piping layout/equipment arrangement/plot plan drawings. Its objective is to indicate all process and utility lines, instruments and controls, equipment, and data necessary for the applicable design groups. The P&ID provides drafting with the necessary data to prepare the construction drawings and provides a complete design detail relative to equipment and piping. The P&ID is developed from the PFD and is a schematic drawing showing every piece of equipment for the entire facility including the process, utilities, firewater system, safety systems, and spare equipment. In addition, it shows nozzles, all pipe and in-line fittings (valves, tees, reducers, strainers, sight glasses, drains, vents, sample points, control valves, etc.), instruments and control loops (but not instrument piping), and some electrical data such as tracing and motor drives (refer to Figure 5.3).

All piping should be shown with flow arrows and line numbers indicating size, pressure rating, service, heat tracing, and insulation. In this manner, it is possible to reference individual specifications, purchase orders, inspection reports, invoices, etc., to the correct piece of equipment as the job progresses.

Before the P&IDs can be finalized, a pipe, valve, and fitting specification must be agreed upon. This would specify, for various pressure ratings and services, the pipe wall thicknesses, end connections, branch connections, minimum sizes, instrument and drain connections, etc.

The layout of the P&ID should resemble, as far as practicable, that of the PFD. The process relationship of equipment should correspond exactly. It is often useful to draw equipment in proportion vertically but to reduce horizontally to save space and allow room for flow lines between equipment. Crowding information is a common drafting problem. It is advisable to always space generously, as, more often than not, revisions add information.

The P&ID is a definitive statement of project requirements and is used throughout the project by

- project management team to define and coordinate design requirements;
- process engineers to check corrections of facility instrumentation and control, pipe connections, sizes and specifications, and utility connections and supplies;
- safety professional for hazards and operability studies (HAZOPs);
- piping engineers to define required piping and in-line fittings and to identify pipe, valves, fittings, etc.;

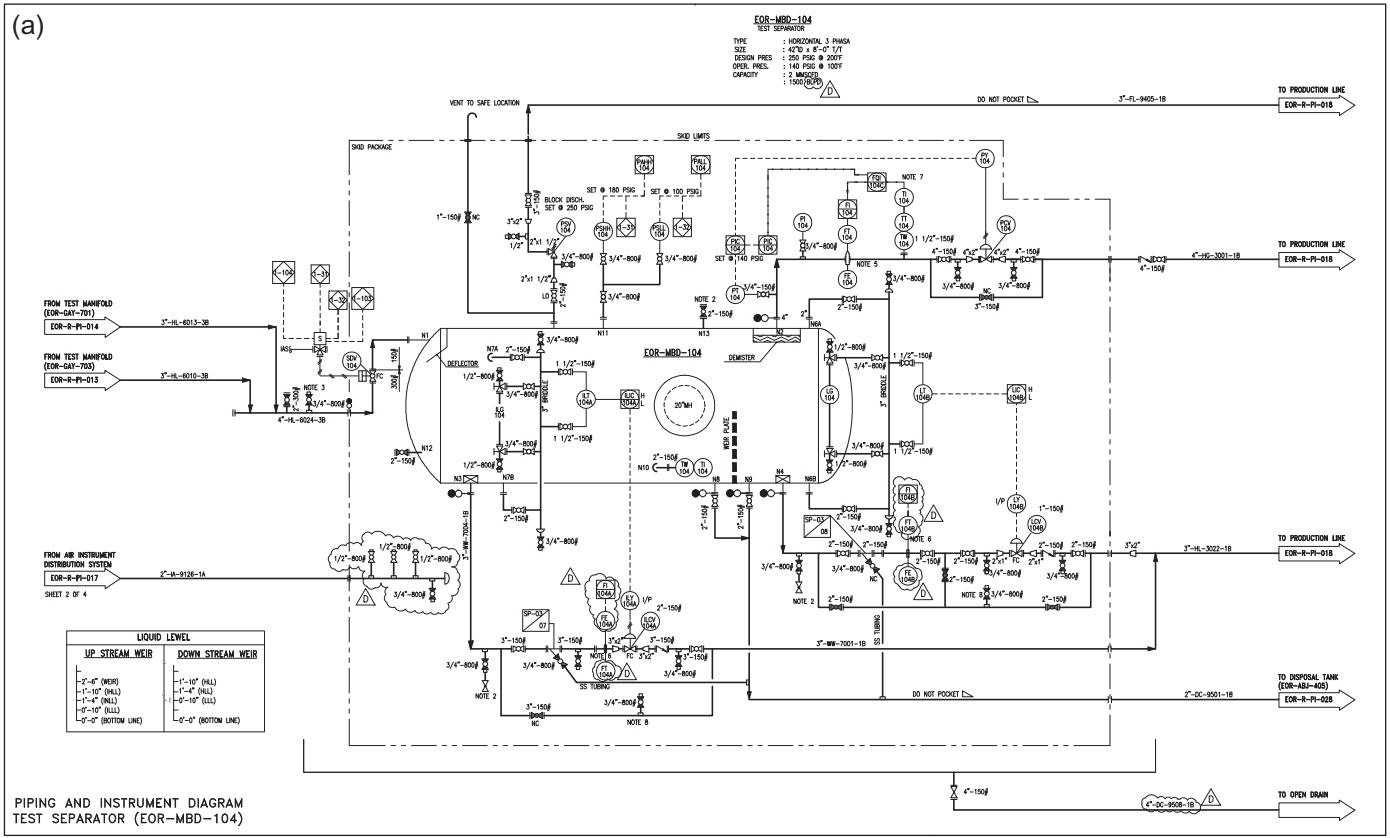

Figure 5.3 Piping and instrument diagram (P&ID).

(*Continued*)

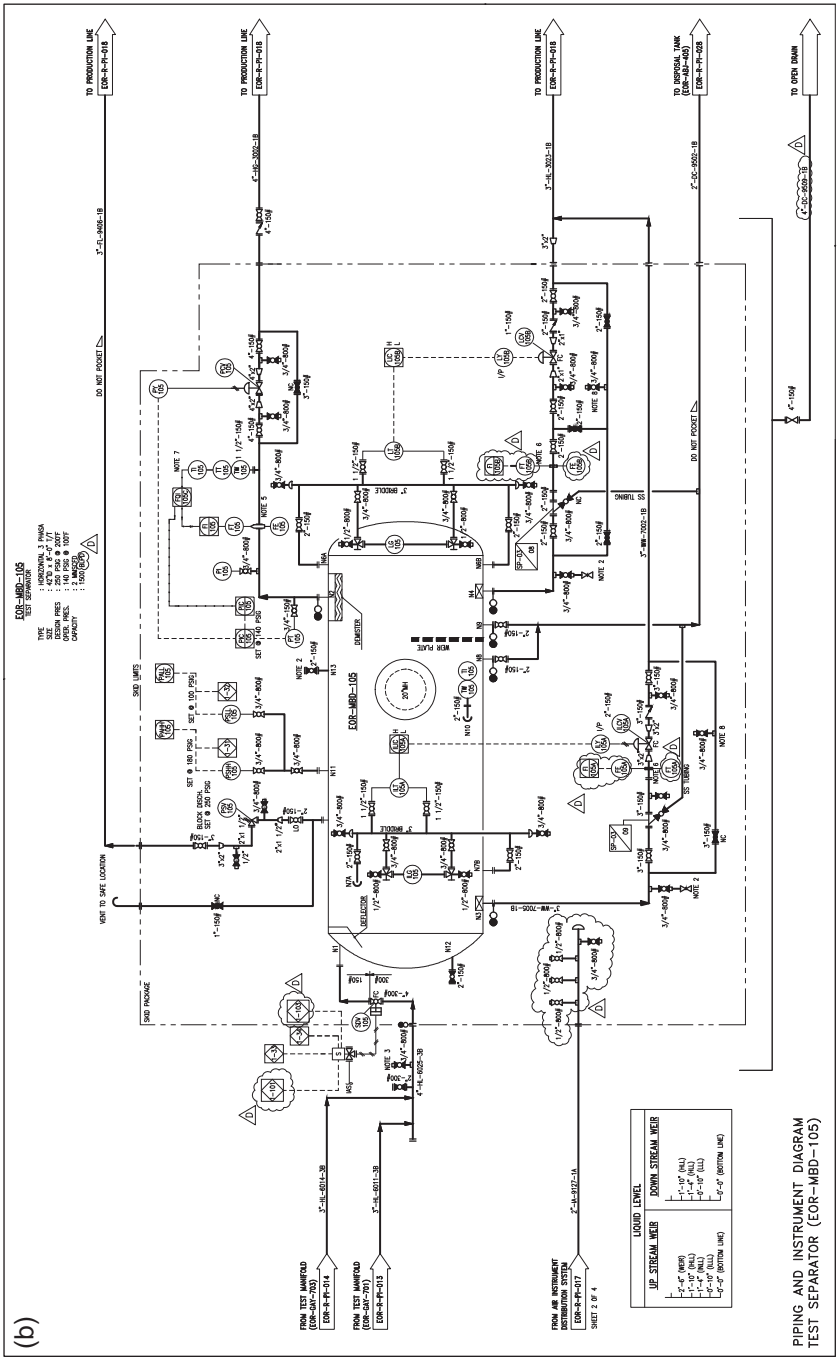

Figure 5.3, cont'd

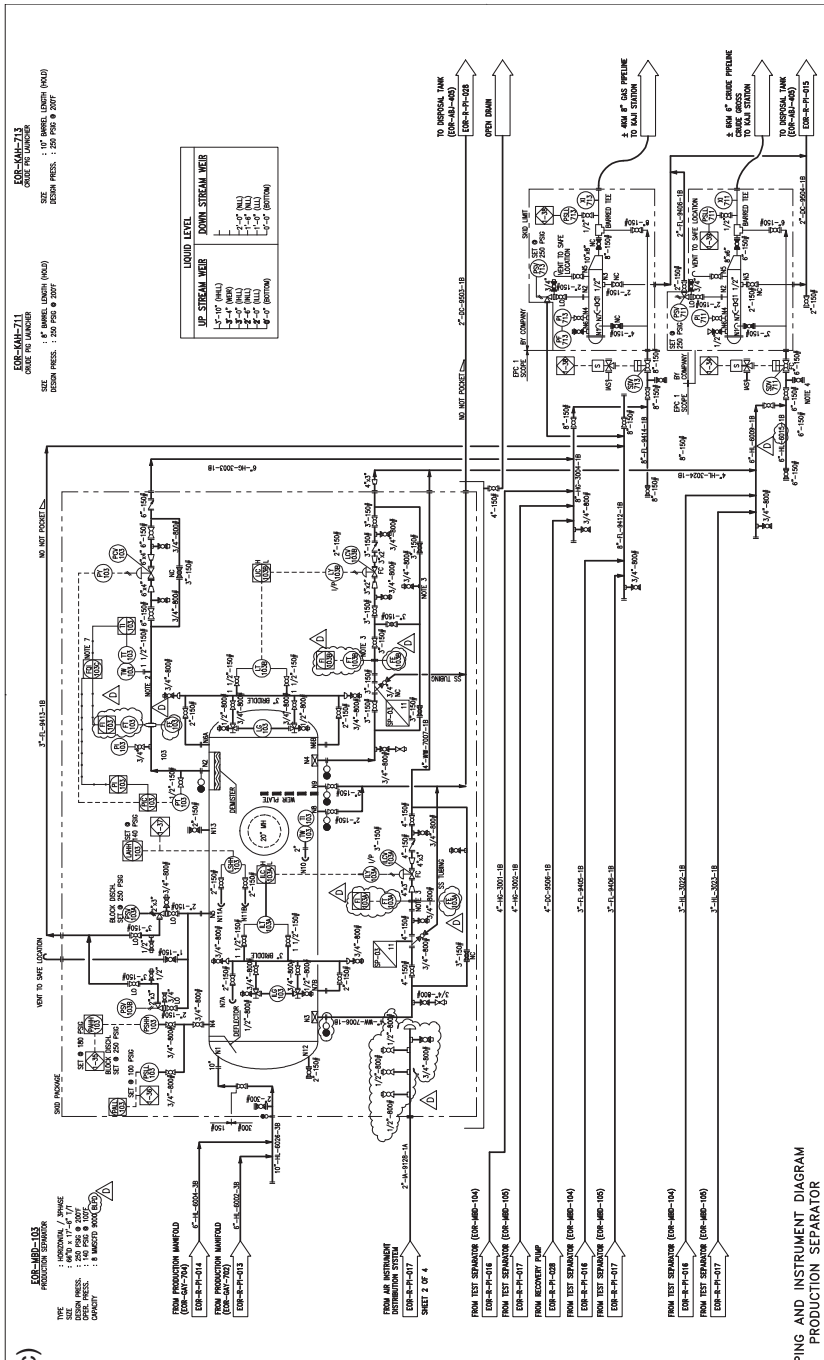
(C)
EOR-WD-103
PRODUCTION SEPARATOR
TYPE : HORIZONTAL / 3PHASE
SIZE : 48"Ø x 17'-6" (T/T)
DESIGN PRESS. : 150 PSIG @ 100°F
OPER. PRESS. : 140 PSIG @ 100°F
CAPACITY : 8 MMCFD 30API
EOR-KAH-711
CRUDE PIG LAUNCHER
SIZE : 8" BARREL LENGTH (HOLD)
DESIGN PRESS. : 250 PSIG @ 200°F
EOR-KAH-713
CRUDE PIG LAUNCHER
SIZE : 10" BARREL LENGTH (HOLD)
DESIGN PRESS. : 250 PSIG @ 200°F
LIQUID LEVEL
UP STREAM WEIR
DOWN STREAM WEIR
FROM PRODUCTION MANIFOLD (EOR-GAY-704)
FROM PRODUCTION MANIFOLD (EOR-GAY-702)
FROM AIR INSTRUMENT DISTRIBUTION SYSTEM
SHEET 2 OF 4
FROM TEST SEPARATOR (EOR-WBD-104)
FROM TEST SEPARATOR (EOR-WBD-105)
FROM RECOVERY PUMP
TO DISPOSAL TANK (EOR-AB)-005)
OPEN DRAIN
± 16KM 6" GAS PIPELINE TO NAA STATION
± 16KM 6" CRUDE PIPELINE TO NAA STATION
TO DISPOSAL TANK (EOR-AB)-005)
NO NOT POCKET
VENT TO SAFE LOCATION
SKID PACKAGE
BY COMPANY
EPC 1 SCOPE
SHUTDOWN
SHUTDOWN VALVE
BLOCK DISCH. SET @ 250 PSIG
SET @ 100 PSIG
SET @ 180 PSIG
SET @ 250 PSIG
SET @ 100 PSIG
SET @ 250 PSIG
SET @ 250 PSIG
SET @ 250

- instrument engineers to confirm instrument locations, loops, and identities;
- construction engineers as a construction aid and checklist;
- commissioning and operating personnel as part of their operating and troubleshooting manuals.

Most CAD systems used today have a relational database that integrates the role of the P&ID into a major repository of project design information. The P&ID is therefore a schematic representation of the process data on piping, instrumentation, and equipment.

5.1.2.4 Utility flow diagram

Large facilities will have a separate UFD that shows all utility lines servicing process lines and equipment. Utility lines would consist of steam, water, air, and possibly instrument gas, etc. In small facilities, all process and utility piping, valves and fittings would be included in the P&ID.

The UFD includes all pipes, valves, and instrumentation of the facility utilities. Utilities are services that are essential to the proper function of the facility. Some of the common facility utilities include the following:

- Steam
- Fuel oil
- Instrument air/gas
- Drain system
- Utility air
- Cooling water
- Flare system
- Firewater system

5.1.2.5 Layout/equipment arrangement drawings

The layout or equipment arrangement drawing is often called the "plot plan." The process engineer and the piping group usually make several possible arrangements of equipment with the intent of establishing an optimal design that satisfies all process and safety requirements. The facilities' layout drawing is a scaled plan view of the facility showing the location of all major equipment; buildings, walkways, and escape routes; and prevailing winds (optional) defined on the P&IDs. It indicates the proper spacing of equipment that minimizes fire and gas hazards, aids in planning and piping layout, aids in electrical area classification, and aids in hazards analysis reviews. A well-planned layout is the key to good operation, economical construction, and efficient maintenance. The layout drawing must be integrated with the development of the PFD and P&ID and must be settled before detailed piping, structural, and electrical design can be started. Many times the process can be simplified by the judicious layout of atmospheric vessels. This is particularly true for drain and water-treating equipment.

The equipment arrangement diagram is a scaled plan view of the facility showing the location of all major equipment; buildings, walkways, and escape routes; and prevailing winds. The diagram indicates the proper spacing of equipment that

1. minimizes fire and gas hazards,
2. aids in planning and piping layout,
3. aids in electrical area location, and
4. aids in hazards analysis reviews.

Good layout planning is usually the result of experienced judgment rather than prescribed rules and for this reason should be a joint effort of the most experienced engineers. This is particularly true of offshore platforms where space is very expensive. A large part of layout design involves separating pieces of equipment that could present a hazard to each other, assuring clear escape routes and allowing for machinery maintenance. Too often, an inexperienced engineer will concentrate on minimizing piping and neglect these concepts. Figure 5.4 is a typical layout for the production skid portion of an offshore platform.

When the equipment arrangement drawings are approved, they are developed into a "plot plan" by the addition of dimensions and coordinates to locate all major items of equipment and structures. North and east coordinates of the extremities of structures and the centerlines of steelwork are shown on the plot plan, preferably at the west and south ends of the installation. Both "plant" north and "true" north should be shown.

5.1.2.6 Piping drawings

Once the design engineering is completed and the major items of equipment have been specified and bid out, the next step in the project is to perform the detailed engineering. This consists of piping drawings, structural drawings, electrical one-line drawings, instrument data sheets, and control schematics.

Completed piping drawings show spool numbers if this not subcontracted to others. It is not always possible for the piping drawing to follow exactly the logical arrangement of the P&ID. Sometimes lines must be routed with different junction sequences, and line numbers may be changed.

The piping drawings translate to the fabrication contractor the piping arrangement as defined in the PFD and P&IDs. These drawings are usually very simple for onshore facilities, whereas for complex offshore facilities, where space is important, they become very complex. In many cases, a good set of piping drawings is the key to a facility that is easy to build and operate. In all cases, a good set of piping drawings is required to speed installation and keep the cost for "extras" to a minimum. Figure 5.5 is an example of a piping drawing.

Piping drawing plan view considerations are as follows:

- Plan views should be drawn for each deck of a platform. These views should show what the layout will look like between adjacent decks, viewed from above, or at the elevation through which the plan view is cut.
- If the plan view will not fit on one sheet, it should be presented on two or more sheets, using matchlines to link the drawings.

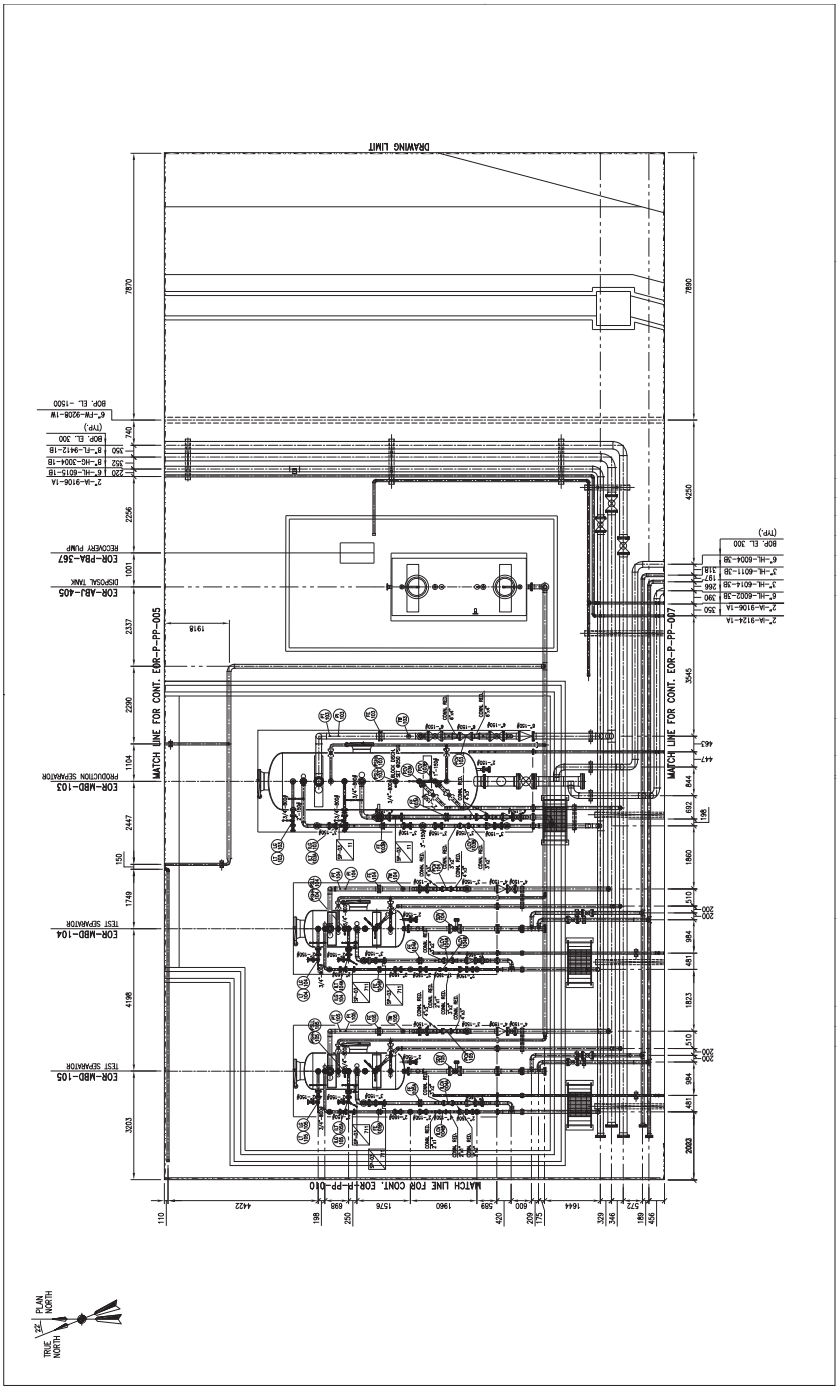

Figure 5.4 Production skid layout.

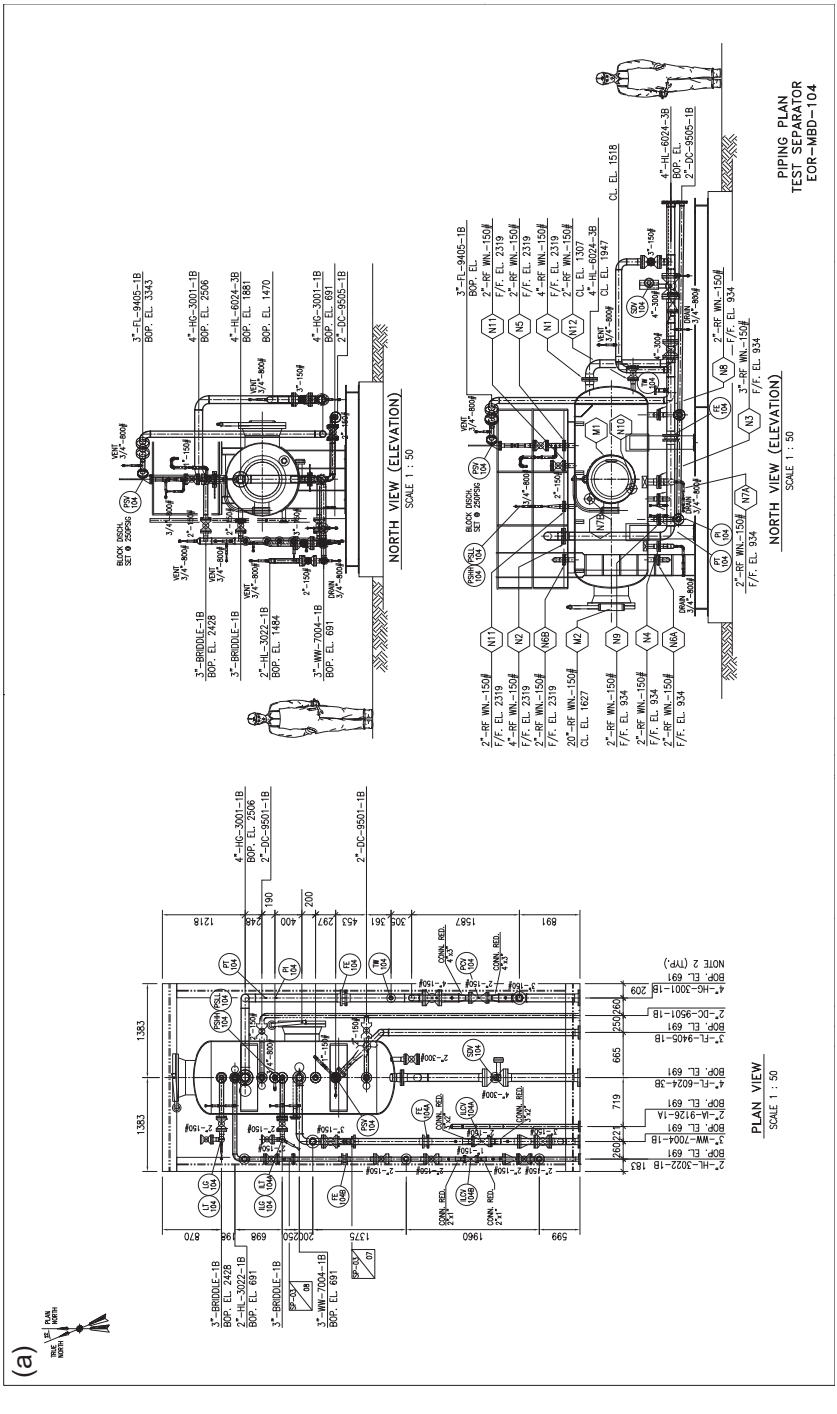

(*Continued*)

Figure 5.5 Piping drawing.

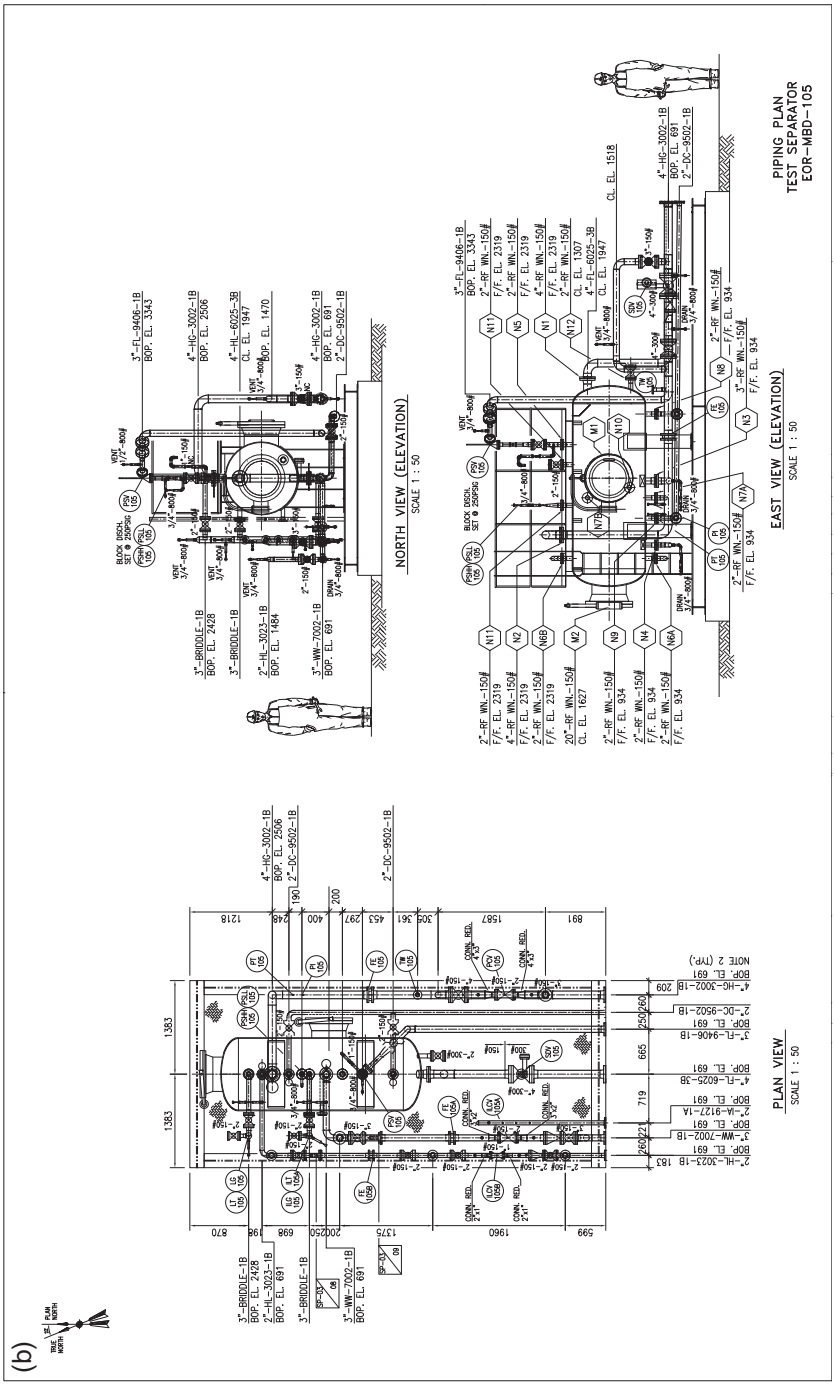

Figure 5.5, cont'd

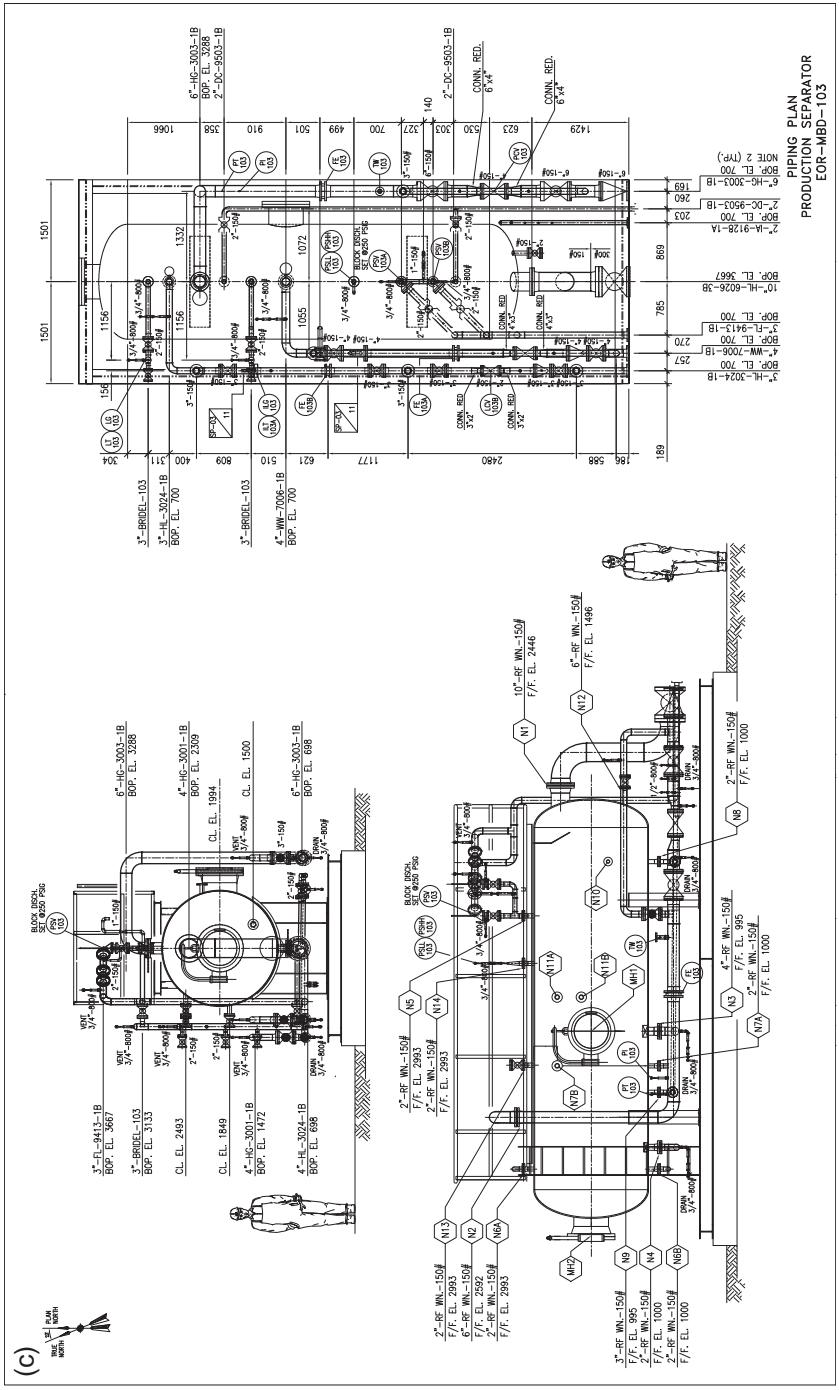

Figure 5.5, cont'd

Elevations (sections) and detail considerations are as follows:

- Elevations and details should be drawn to clarify complex piping or piping hidden in the plan view.
- Details that can be described by a note need not be drawn.
- Show only as many sections as necessary. A section does not have to be a complete cross section of the plan.
- Any part requiring fuller detail should be drawn to a larger scale. Enlarged details are preferably drawn in available space on elevation drawings and should be cross-referenced by the applicable detail and drawing number(s).

5.1.2.7 Piping fabrication drawings or "isometrics" and "spools"

The two most common methods for producing piping designs for a process facility are making either plan and elevation drawings and constructing a scaled model. For fabricating welded piping, plans and elevations are sent directly to a subcontractor, usually a shop fabricator. Isometric views (ISOs) are commonly used in prefabricating parts of butt-welded piping systems. ISOs showing the piping to be prefabricated are sent to the shop fabricator.

The prefabricated parts of the piping system are called "spools." The piping group either produces ISOs showing the required spools or marks the piping to be plans and elevations, depending on whether or not a model is used.

Piping "isometric" and "spool" drawings shows a complete line from one piece of equipment to another. It gives all information necessary for fabrication and erection of piping. Today, ISOs are usually drawn using CAD. The various runs of pipe, fittings, and valves should be roughly in proportion for easy understanding. Items and information that are shown on an ISO include the following:

- North arrow (plant north).
- Dimensions and angles.
- Reference number of plan drawing from which an ISO is made, line number, direction of flow, insulation, and tracing.
- Equipment numbers and locations of equipment.
- Identify of all items by using common symbols and a description if necessary.
- If a flange is different from the specification for the connected pipe, then the details of the flanged nozzles on equipment to which piping has to be connected should be included.
- Size and type of every valve.
- Size, pressure rating, and instrument number of control valves.
- Number, location, and orientation for each instrument connection.
- Shop and field welds. Limits of shop and field fabrication.
- ISO sheet continuation numbers.
- Unions required for installation and maintenance purposes.
- On screwed and socket-welded assemblies, valve handwheel positions need not be shown.
- Materials of construction.
- Locations of vents, drains, and traps.
- Locations of supports, identified by pipe support number.

5.1.2.8 Structural drawings

Structural drawings for an onshore facility detail the foundation site development and road work required, as well as any pipe supports or skids for the production equipment. Structural drawings for an offshore facility can include platform drawings, as well as those for production skids themselves. The skids could be installed on wooded or concrete piles, steel or concrete barges, or steel jackets with steel decks. Figure 5.6 is a typical structural drawing for an offshore facility.

The barge, platform, and pile drawings are the first drawings to be made. These drawings are based on environmental wind, wave, and current forces. The structural engineer must be furnished deck space requirements and dead and live loadings. Those loads created by the drilling operations, as well as the loads required for the facilities, must be considered. When all factors that influence design are established, the drawings can be carried out.

Many times the drilling equipment will be removed before the production equipment is set. The drilling equipment is packaged and skid-mounted and the principle components of the superstructure will be main load-bearing members boxed together on a spacing compatible with the skidded rig components. Production equipment usually does not involve greater weights than those imposed by drilling components. An exception may occur if large storage is required or very large process vessels are stacked one above the other. More total space may ultimately be required for production equipment than for drilling equipment, but this is designed into the base structure and simply is not occupied during drilling operations.

The superstructure design documents cannot be completed until the size, weight, and location of the production equipment are fairly well defined. If production equipment is to be installed after the wells are drilled, it may be necessary to set a higher value than would be anticipated with completion of the design engineering phase.

5.1.2.9 Electrical one-line drawings

Electrical one-line drawings show the main flow of power to major pieces of equipment. Items shown should include transformers with ratings, circuit breakers with ratings, generators with ratings, motors with horsepower and ratings, relays, buses with voltage rating shown, control stations, and names of equipment as shown on the P&IDs. Figure 5.7 is a typical electrical one-line drawing.

5.2 Data sheets

5.2.1 Instrument data sheets

Instrument data sheets and control schematics vary considerably in format, depending on company preference. Instrument data sheets usually follow the International Society of Automation (ISA) format. As shown in Figure 5.8, the instrument data sheets list all necessary information required to specify and identify each instrument.

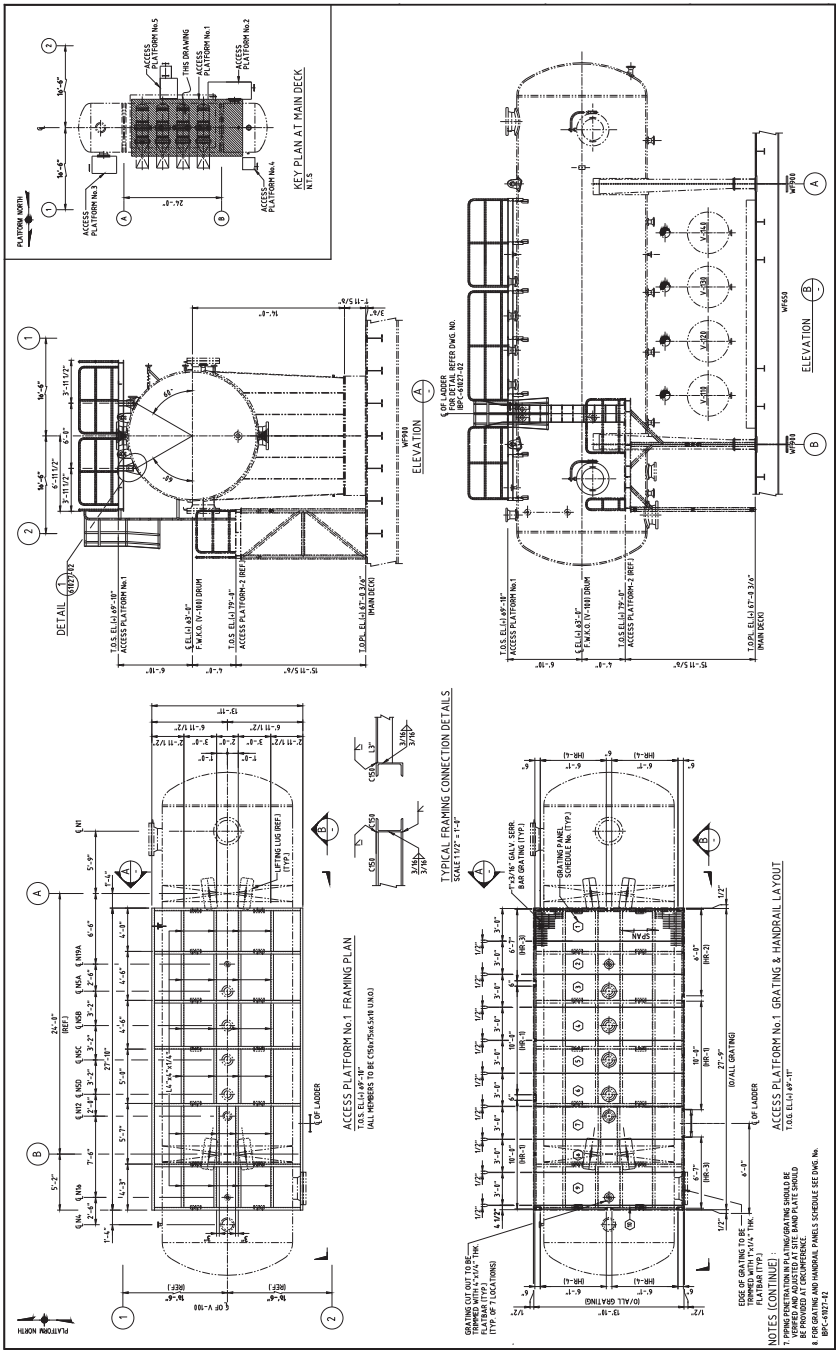

Figure 5.6 Structural drawing.

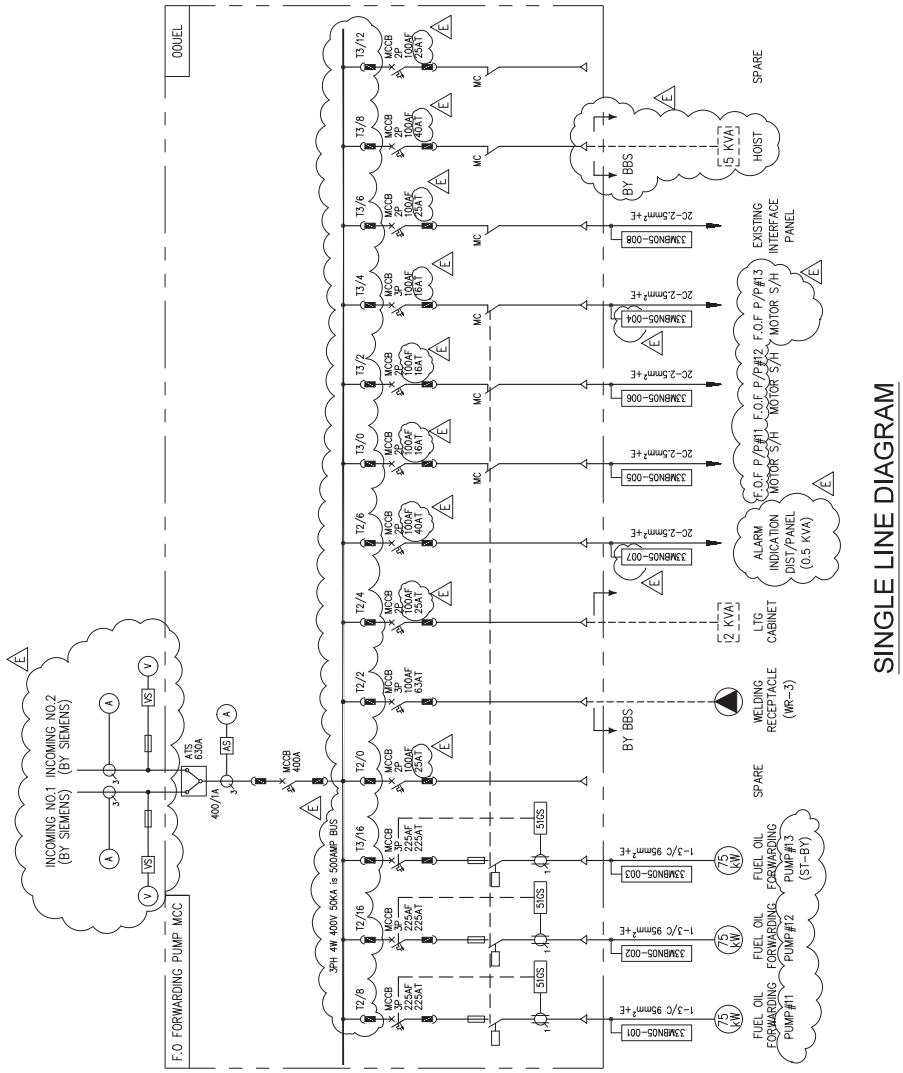

Figure 5.7 Electrical one-line drawing.

				CONTROL VALVES	SHEET 1 OF 7		
				NO. BY DATE REVISION	SPEC NO. 1-CV-01	REV. D	
				A GMH 12/96 ISSUE FOR REVIEW	CONTRACT 96383	DATE 01/29/96	
				B GMH 1/97 ISSUE FOR QUOTE	REQ. 105 P.O. 960630105		
				C GMH 2/97 ISSUE FOR PURCH	BY GMH	CHK'D MEW	APPR.
				D GMH 2/97 GENERAL REV			
GENERAL	1	Tag No.		LV-1011		FV-I0I 1	
	2	Service		SLUG CATCHER INLET (LIQUID)		SLUG CATCHER INLET (GAS)	
	3	Line No /Vend No.		MBF-1000		MBF-1000	
	4	Line Stze/Sched. No.		24"-PG-J03-E2 / SCH 80		18" - PG-J03-E2 / SCH 80	
	5	Function		SLUG CATCHER INLET		SLUG CATCHER INLET / LEVEL CRL	
BODY	6	Type of Body		GLOBE		GLOBE	
	7	Body Size	Port Size	12"	10"	12"	10"
	8	Guiding	No. of Ports	CAGE	ONE	CAGE	ONE
	9	End Conn. & Rating		12" - 900 RTJ		12" - 900 RTJ	
	10	Body Materiel		WCB STEEL		WCB STEEL	
	11	Packing Material		SINGLE TFE		SINGLE TFE	
	12	Lubricator	Iso. Valve	NONE	NONE	NONE	NONE
	13	Seal Type		V-RING		V-RING	
	14	Trim Form		LINEAR (TRIM # 77)		LINEAR (TRIM #77)	
	15	Trim Material		316 SS W/ CoCr HARDENED TRIM		316 SS W/ CoCr HARDENED TRIM	
	16	Seat Material		316 SS W/ CoCr HARDENED TRIM		316 SS W/ CoCr HARDENED TRIM	
	17	Required Seat Tightncaa		ANSI CLASS III		ANSI CLASS III	
	18	Max Allow Sound Level dBA		85		85	
ACTUATOR	19	Type of Actuator		PNEUMATIC DIAPHRAGM		PNEUMATIC DIAPHRAGM	
	20	Valve Fail Position		OPEN		CLOSED	
	21	Supply to Actuator Normal / Max.		6 - 30 PSIG		6 - 30 PSIG	
	22	Seif Cont	Ext. Conn	N/A	N/A	N/A	N/A
	23	Diaphragm Material		MFG STD		MFG. STD.	
	24	Diaphragm Rating		55 PSIG		55 PSIG	
	25	Spring Range		BENCH SET 8-24 PSIG		BENCH SET 11-30 PSIG	
	26	Manual Overide		N/A		N/A	
	27	Actuator Mfg / Model No.		FISHER 657-4 SIZE 87-4 (IR6760)		FISHER 667-4 SIZE 87-4 (IR6760)	
ACCESSORIES	28	Filt Reg	Supply Gage	67 FR	YES	N/A	N/A
	29	Positioner		35821 (4-20 MADC IN. 6-30 PSIG OUT)		N/A	
	30	Pilot Valve		TRAVEL STOP (SEE NOTE 4)		TRAVEL STOP (SEE NOTE 4)	
	31	Limit Switches		N/A		N/A	
	32	Solenoid Valve		N/A		N/A	
	33	Position Transmitter		N/A		N/A	
SERVICE	34	FLOW UNITS					
	35	Fluid		NAT. GAS / CONDENSATE (NOTE 3)		NATURAL GAS	
	36	QuaM Max.	Cv	(SEE NOTE 1)	37985 / 17J4	400 MMSCFD	37985
	37	Quant Oper.	Cv	(SEE NOTE 1)	37985 / 1754	400 MMSCFD	37985
	38	Valve Cv	Valve FL	62500/1970	K = 0.64	62500	CI - 31.7
	39	Norm. Inlet Press	D P	1250 PSIG	15 PSID	1250 PSIG	15 PSID
	40	Max Inlet Press		1800 PSIG		1800 PSIG	
	41	Max Shut Off	D P	1800 PSI	1800 PSI	1800 PSI	1800 PSI
	42	Temp. Max.	Operating	100DEFF	70 DEG F	100 DEF F	70 DEG F
	43	Oper. sp gr	Mol. Wt.	0.65 / O 56	18.7 /N/A	0.65	18 7
	44	Oper. Vise.	% Flash	0014/0.1734	3 8%	0.014	N/A
	45	% Superheat	% Solids	N/A	N/A	N/A	N/A
	46	Vapor Press	Cnt Press.	1200 PSIA	1600 PSIA	1200 PSIA	1600 PSIA
	47	P&ID No.		SD-43244		SD-43244	
	48	Manufacturer		FISHER		FISHER	
	49	Model No.		12" - 657-EHD		12" - 667-EHD	

Note:
1.) FLOW REQUIRED 400 MMSCFD AND 8300 GPM CONDENSATE.
2.) - - DENOTES INFORMATION SUPPLIED BY VENDOR.
3.) NORMALLY, FV-1011 & LV-1011 ARE IN THE OPEN POSITION. DURING SLUGGING CONDITION FV-1011 WILL CLOSE AND LV–1011 WILL CONTROL LIQ. LEVEL
4.) VALVE TO BE SUPPLIED C/W MINIMUM CLOSE TRAVEL STOPS.
5.) FV-1011 & LV-1011 WILL EXPERIENCE THE IMPACT OF LIQUID SLUGS (SG-0.56) ARRIVING AT VELOCITIES UP TO 27 FPS WHILE IN ANY POSITION. FROM FULLY OPEN TO FULLY CLOSED.
6.) TAG ITEMS TO BE SUPPLIED WITH SS TAGS PERMANENTLY ATTACHED.

Figure 5.8 Instrument data sheet.

This information may include such items as tag number, operating conditions, materials of construction, manufacturer, and model number.

5.2.2 Task schedule

The first step in setting engineering priorities and determining the numbers of engineers and draftsmen needed to meet timing objectives is to develop a task schedule for each of the engineering tasks shown in Figure 5.9. The task schedule shows a week by week or month by month accounting of the engineering and drafting effort by discipline required to meet the targets in the plan of execution.

5.2.3 Drawing list

To help in estimating man-hours, it is necessary to develop a drawing list with the task schedule. Figure 5.10 shows a typical drawing list. Each drawing necessary to complete the engineering effort is listed, and the drafting man-hours necessary to complete the drawing are estimated. The drawing list and task schedules define the engineering effort from the outset and provide excellent tools with which to measure actual progress.

5.2.4 Manpower estimate

The task schedules for each identified task can now be added together to determine an overall manpower requirement for the entire project as shown in Figure 5.11. At this point, it may be desirable to adjust the plan of execution to help smooth out manpower loading. A plan of execution that requires large swings in manpower is probably not practical.

A comparison of man-hours required with the time available will determine the approximate number of personnel needed. The preliminary estimate will permit evaluation of manpower requirements against availability and will be the basis for appointing key personnel. The levels of manpower required during progression of a project follow a similar trend whether involving an offshore production platform or an onshore processing facility.

5.3 Symbols

5.3.1 Piping symbols and abbreviations

Figure 5.12 shows some of the common valve symbols used on flow diagrams along with various pipe and instrument line symbols. All valves, irrespective of their size or class rating, are drawn the same size. Nozzles and reducers are not generally shown on the P&ID unless one wants to aid in the visualization and understanding of the flow diagram and its relationship to the equipment arrangement drawing. Figure 5.13 shows some general engineering symbols, signs, etc., that are generally used and

Turbocompressor Unit Related Process Equipment
Task Schedule: Engineering Phase

CODE	ENGINEERING	1		2		3		4		5		6		7		8		9		Planned	To Date
E-A	Project Engineer	2	2	25	65	75	66	56	56	56	56	34	34	15	15	6	6	6	6	622	538
E-2	Instrument Engineer	0	0	0	o		10	10	10	14	14	34	34	5	0	0	0	0	0	132	132
E-4	Structural Engineer	0	0				25	35	45	55	45	35	30	10	10	10	10	0	0	310	290
CODE	DRAFTING	1		2		3		4		5		6		7		8		9		Planned	To Date
D-A	Drftng Coordinator					10	10	15	15	15	10	10	9	7	7	7	0	0	0	115	108
D-1	Proc /Mech Drftng				25	30		75	115	125	115	100	80	40	40	35	35	0	0	860	790
D-9	Structural Drftng	0	0	0	0		25	30	45	65	50	35	25	10	5	5	3	5	5	310	290
D-5/7	Elec./Instr. Drftng	0	0	0	0	0	0	25	33	50	20	10	10	5	0	0	0	0	0	155	155
CODE	PROCUREMENT	1		2		3		4		5		6		7		8		9		Planned	To Date
R-1	Buyer	0	2		1	2	15	30	35	45	55	65	70	65	60	55	45	30	30	653	445
R-2	Expediter	0	0	0	0	0	0		10	10	20	20	20	21	25	25	35	25	25	377	126
CODE	PROJECT MGMT	1		2		3		4		5		6		7		8		9		Planned	To Date
P-1	Project Manager	15	25	35	35	35	35	35	35	35	35	35	35	35	35	35	35	35	35	840	460
P-2	Cost/Scheduler							20	20	20	20	20	20	20	20	20	20	20	20	400	180
O-1	Secretary		2	3	5	10	20	20	30	30	30	30	25	30	30	30	40	40	30	610	265
CODE	CONSTRUCTION MGMT	1		2		3		4		5		6		7		8		9		Planned	To Date
C-4	Construction Coordinator																	30	30	340	0
C-1	Vendor Surveillance											30	30	30	40	60	00	120	120	660	130

COST	DISCIPLINE TOTALS (Month)	1		2		3		4		5		6		7		8		9		Activity	Activity
CODE	(Bi-Weekly)	Aug	Sep	Sep	Oct	Oct	Nov	Nov	Dec	Dec	Oec	Jan	Jan	Feb	Feb	Mar	Mar	Apr	Apr	Planned	To Date
E	Engineering	2	2	25	65	75	101	102	112	125	115	101	79	30	25	16	16	6	6	1.064	960
D	Drafting	0	0	0	25	40	80	145	210	255	195	155	124	62	52	47	40	5	5	1.440	1.343
R	Procurement	0	2	0	1	2	15	30	45	55	75	85	90	86	85	80	80	55	55	1.030	571
P	Project Management	15	27	38	40	45	75	75	85	85	85	85	80	85	85	85	95	95	85	1.850	905
C	Construction Management	0	0	0	0	0	0	0	0	0	0	0	0	0	0	0	0	0	0	0	0
	Total MH Planned	17	31	63	131	162	271	352	452	520	470	426	373	263	247	228	231	161	151	5.384	3.779
	MH Actual	0	0	0	0	0	0	0	0	0	0	0	0	0	0	0	0	0	0		

Figure 5.9 Typical task schedule.

Turbocompressor Unit Related Process Equipment
Drawing Progress: Unit-Process Mechanical

Project

Report: PROG_1

Desc: Client Name

Run: 00/00/97 -12:00 PM

			Pct	Start		Issue		Client App		Cert Issue		Comments
Drawing No	RV	Description	Comp	Plan	Act	Plan	Act	Plan	Act	Plan	Act	
PROCESS/MECHANICAL PROCESS/MECHANICAL												
96341-01-001	B	PROCESS FLOW DIAGRAM	100%	/	/	10/5	10/21	/	/	/	2/7	
96341-01-100	B	P&ID - LEGEND SHEET	100%	/	/	10/5	10/21	/	/	/	2/7	
96341-01-101	B	P&ID - 1ST STAGE COMPRESSION	100%	/	/	10/5	10/21	/	/	/	2/7	
96341-01-102	B	P&ID - 2ND STAGE COMPRESSION	100%	/	/	10/5	10/21	/	/	/	2/7	
96341-01-103	B	P&ID - DISCHARGE SCRUBBER	100%	/	/	10/5	10/21	/	/	/	2/7	
96341-01-104	B	P&ID - FUEL GAS	100%	/	/	10/5	10/21	/	/	/	2/7	
96341-01-105	B	P&ID - SEAL OIL RUNDOWN TANKS	100%	/	/	10/5	10/21	/	/	/	2/7	
		Avg Pct Complete, Early Start, Late Finish:	100%									

Figure 5.10 Typical drawing list.

Turbocompressor Unit Related Process Equipment
Design Engineering
Discipline Manpower Schedule

COST CODE	DISCIPLINE TOTALS (Month) (Bi-Weekly)	1 Aug	*Sep*	2 *Sap*	*Oct*	3 *Oct*	*Nov*	4 *Nov*	*Dec*	5 *Dec*	*Dec*	8 *Jan*	*Jan*	7 *Fab*	*Fab*	8 *Mar*	*Mar*	9 *Apr*	*Apr*	Activity Totals	Activity To Date	Activity Wgt
E	Engineering	2	2	25	65	75	101	102	112	125	115	101	79	30	25	16	16	6	6	1,064	960	16.66%
D	Drafting				25	40	80	145	210	255	195	155	124	62	52	47	40	5	5	1,440	1,343	22.56%
R	Procurement		2		1	2	15	30	45	55	75	85	90	86	85	80	80	55	55	1,030	571	16.14%
P	Protect Management	15	27	38	40	45	75	75	85	85	85	85	80	85	85	85	95	95	85	1,850	905	28.98%
C	Construction Management											30	30	30	40	60	80	150	150	1,000	130	15.67%
	Total MH Planned	17	31	63	131	162	271	352	452	520	470	456	403	293	287	288	311	311	301	6,384	3,909	100%
	MH Actual	16	72		145	150		201	196	206	89	142	236	333	472	224						
	Accum MH Planned	17	46	111	242	404	675	1,027	1,479	1,999	2,469	2,926	3,329	3,622	3,909	4,197	4,508	4,819	5,120		4533.5	
	Accum MH Actual	18	89	130	274	424	566	767	965	1,171	1,260	1,401	1,637	1,970	2,442	2,665					2040.08	

Figure 5.11 Overall manpower schedule.

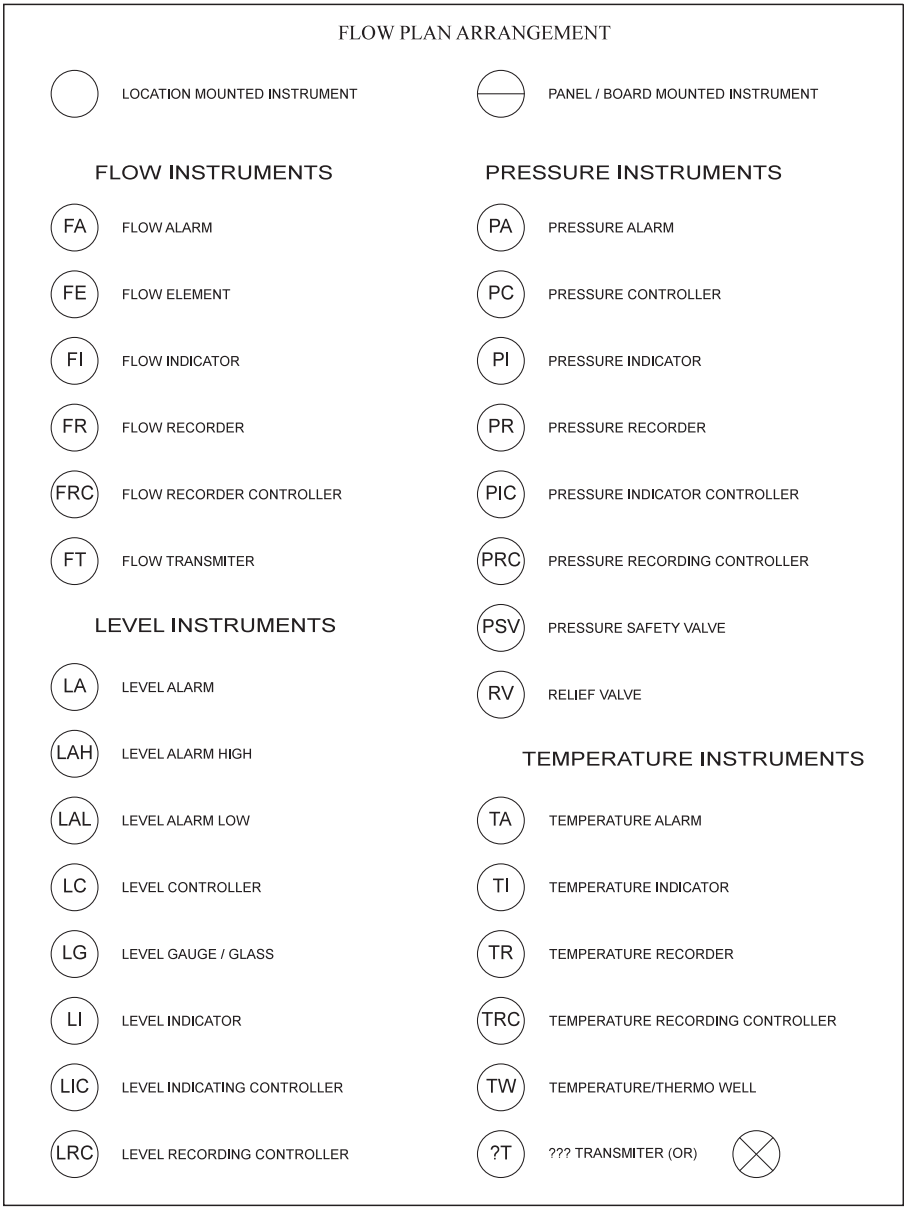

Figure 5.12 Flow diagram piping symbols and abbreviations.

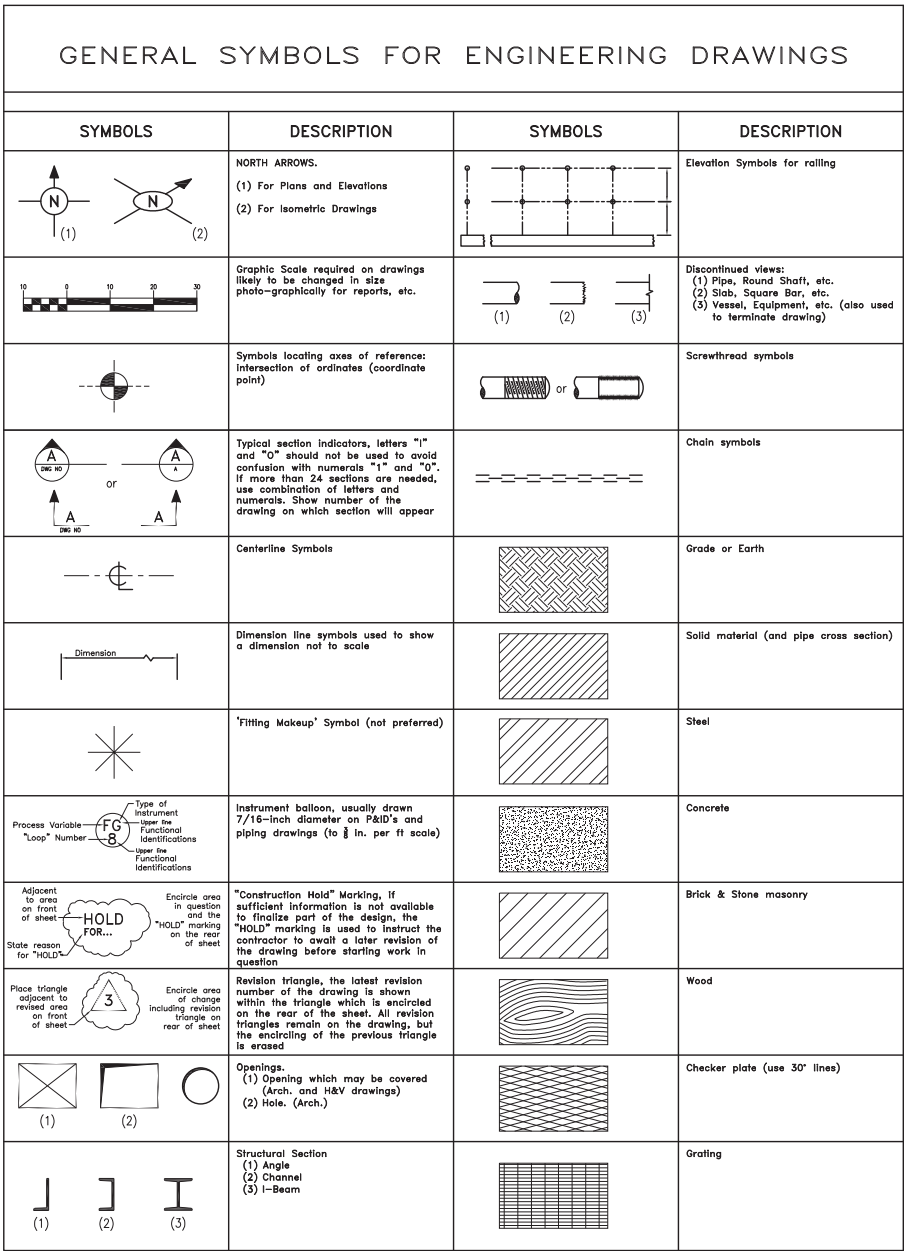

Figure 5.13 General symbols for engineering drawings.

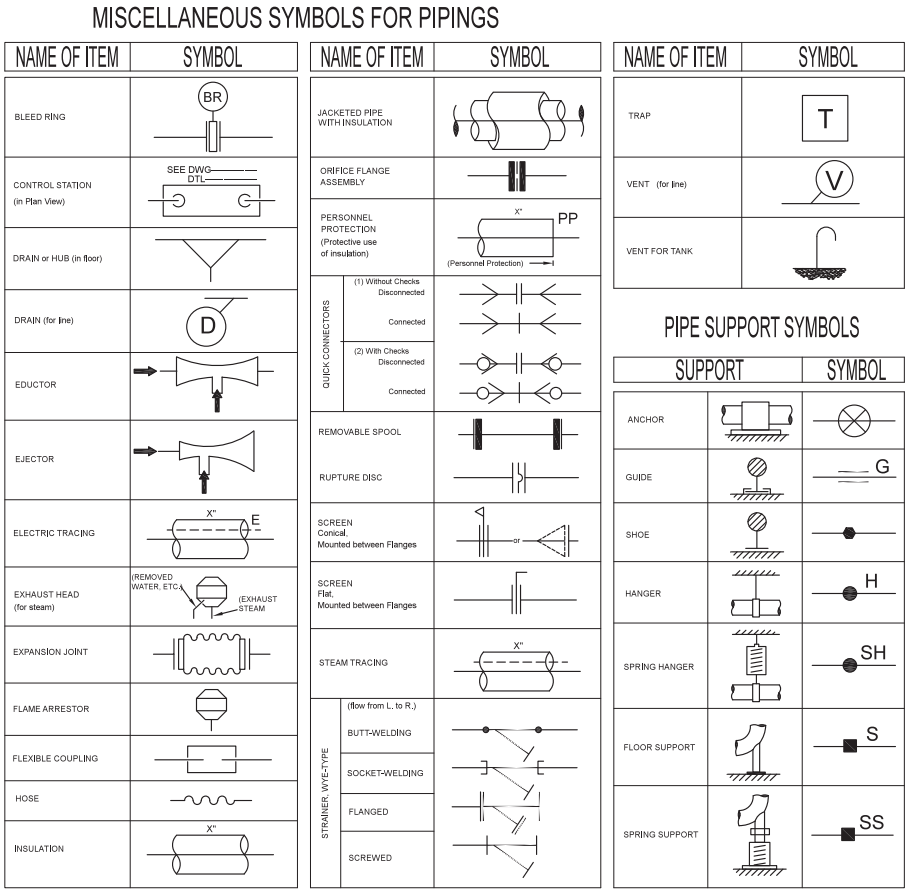

Figure 5.14 Miscellaneous symbols for piping drawings.

are likely found on piping drawings. Figure 5.14 shows miscellaneous symbols that are commonly used. Figures 5.15–5.17 show commonly used symbols for butt-welded, screwed, and socket-welded systems, respectively.

5.3.2 Mechanical equipment symbols

Figure 5.18 are examples of some of the more commonly used symbols used to show mechanical equipment.

5.3.3 Instrumentation designation and symbols

Figure 5.19 illustrates a combination of the instrumentation group and type to develop symbols and abbreviations that represent an instrument's function on a flow diagram. The first letter in the symbol typically indicates the process variable (pressure, level,

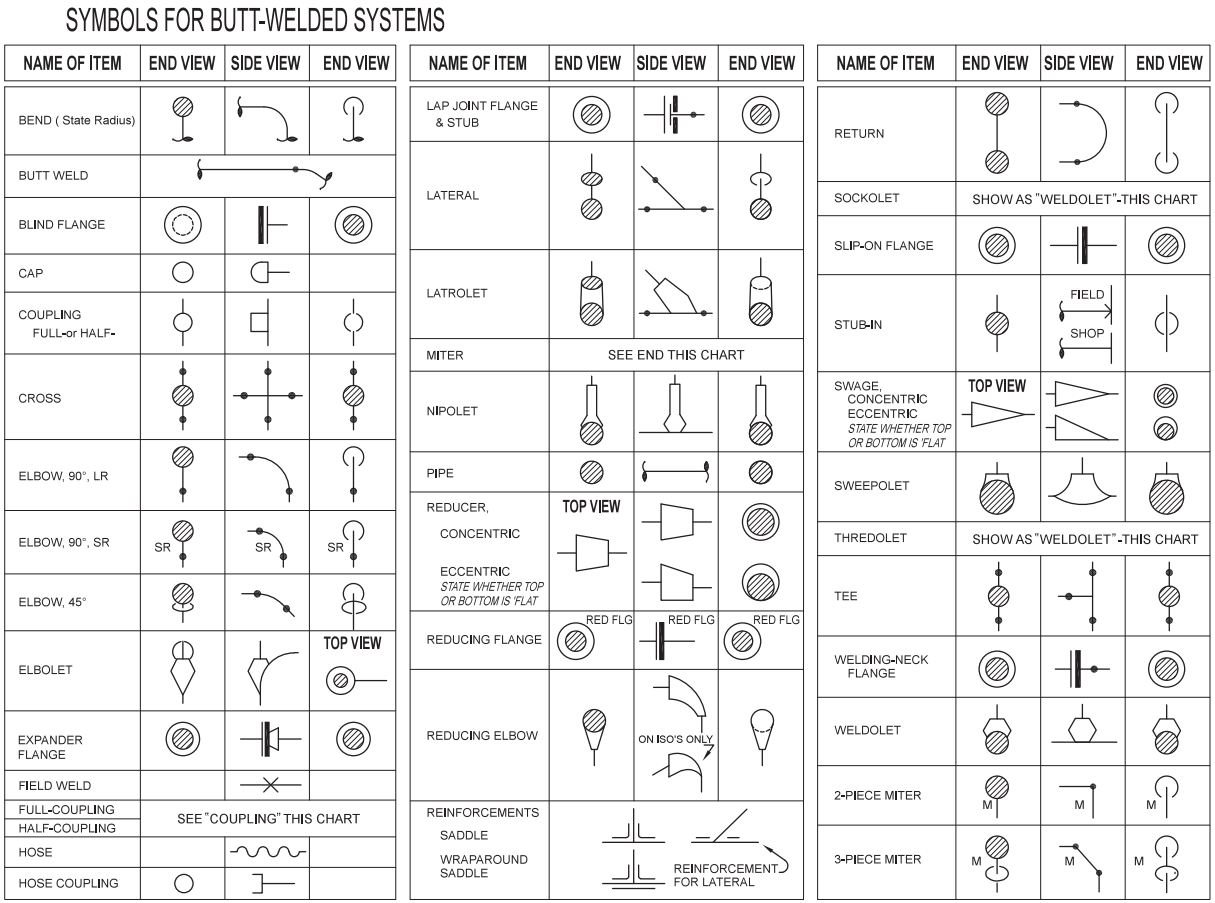

Figure 5.15 Symbols for butt-welded systems.

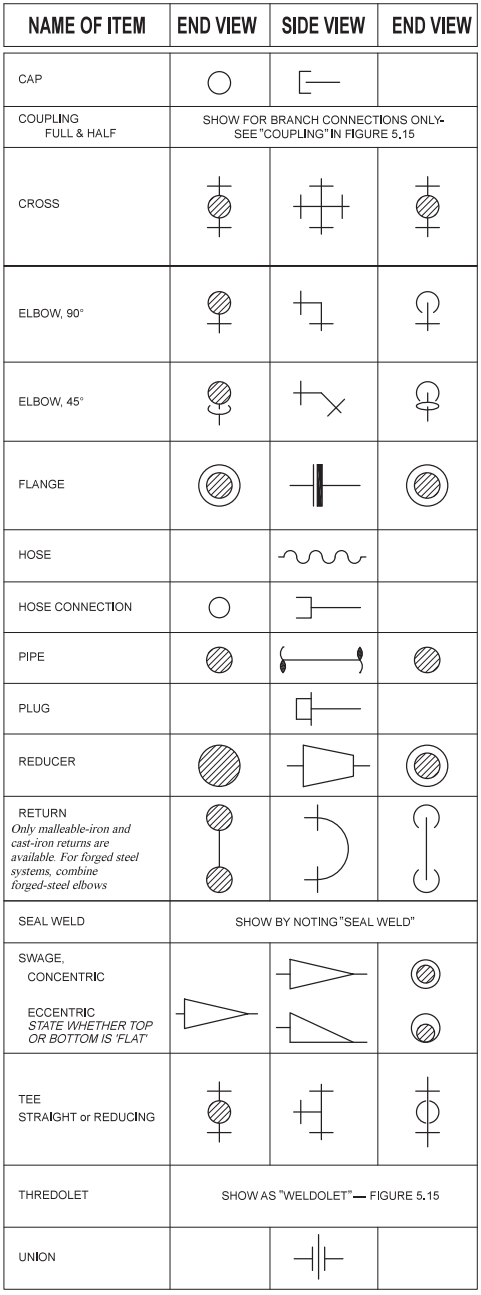

Figure 5.16 Symbols for screwed systems.

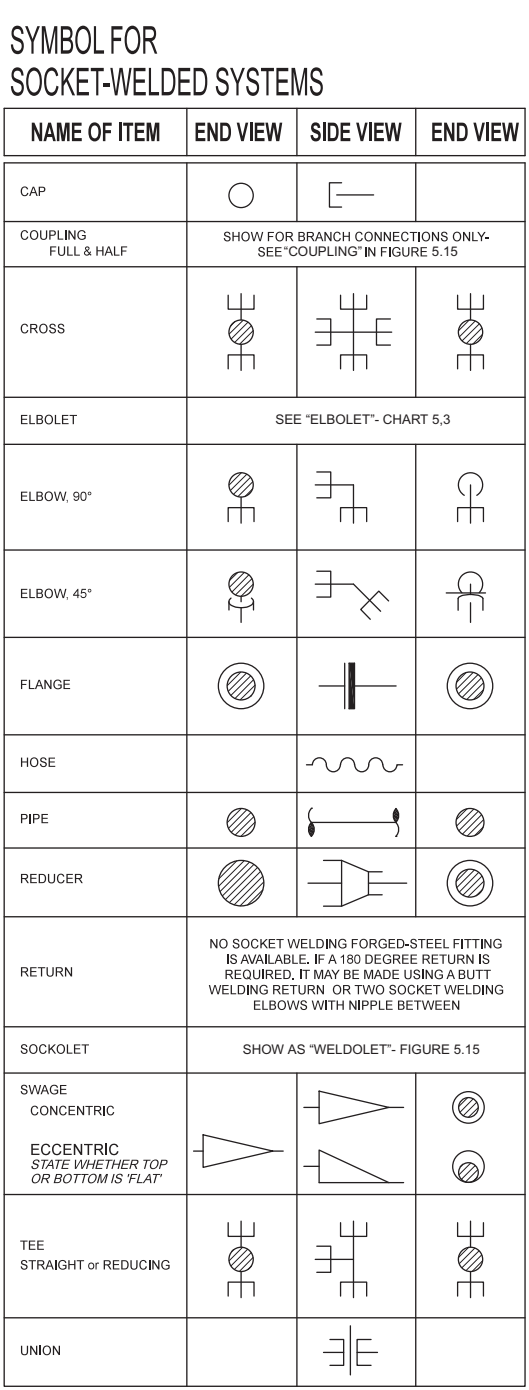

Figure 5.17 Symbols for socket-welded systems.

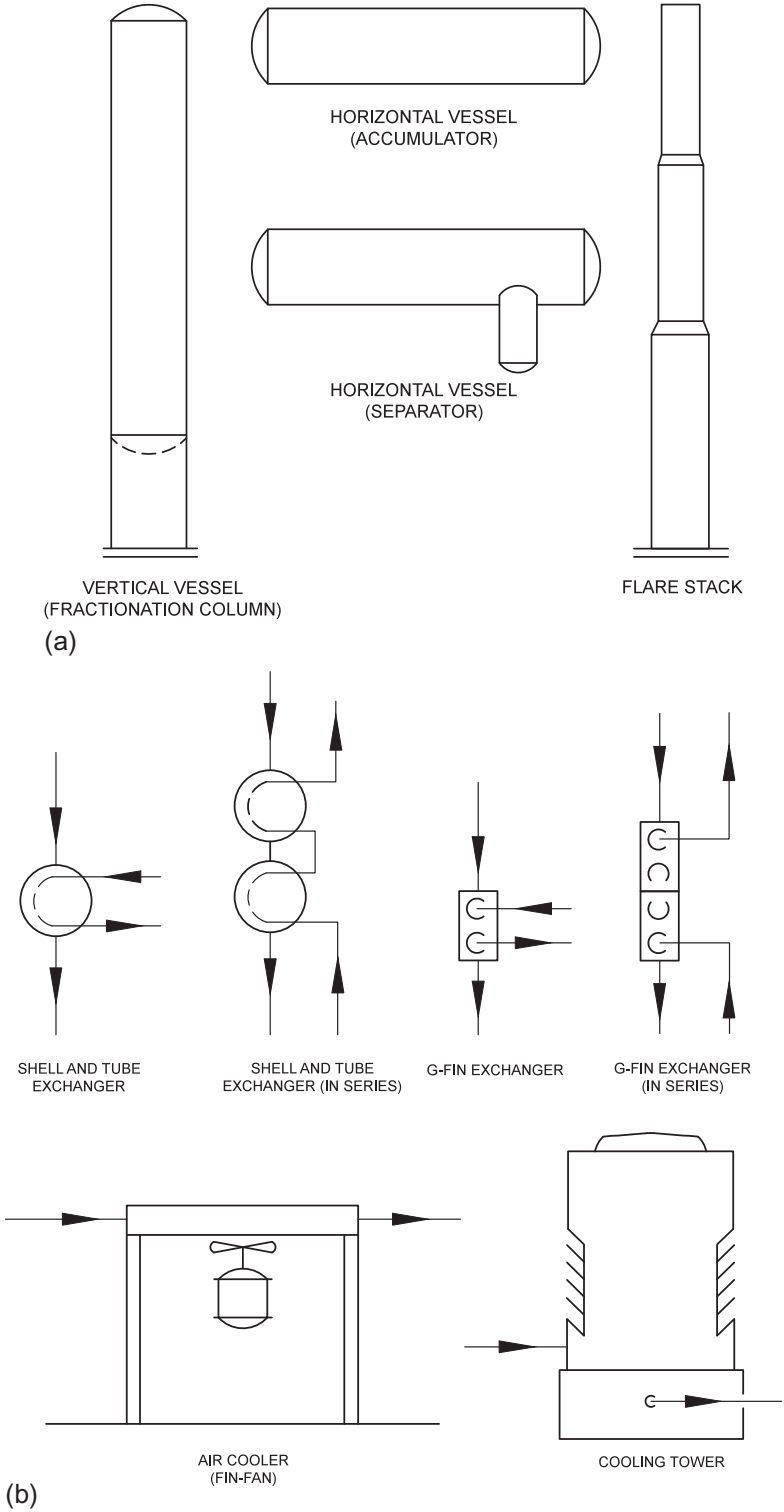

Figure 5.18 (a–e) Flow diagram mechanical equipment symbols.

(*Continued*)

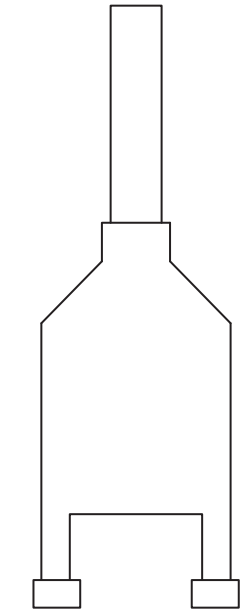

HORIZONTAL (BOX) HEATER

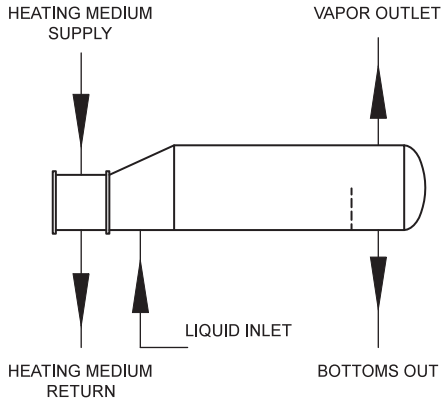

KETTLE-TYPE REBOILER

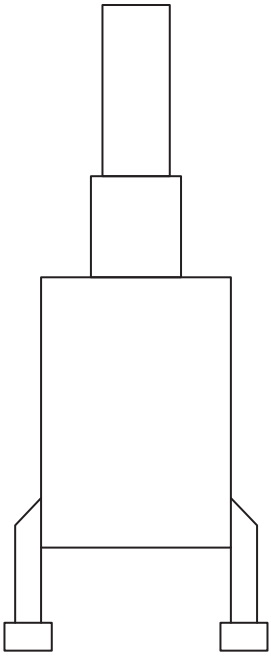

VERTICAL HEATER

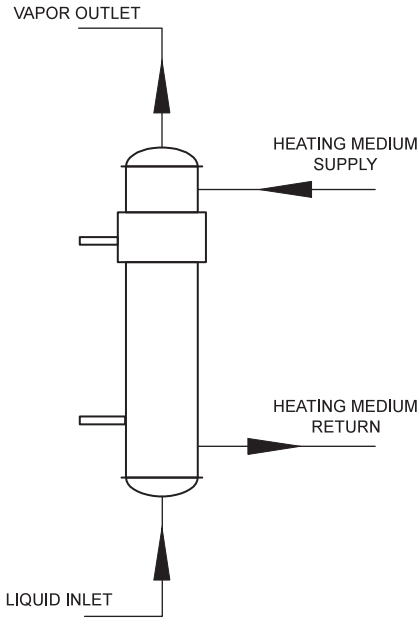

THERMO-SYPHON REBOILER

(c)

Figure 5.18, cont'd

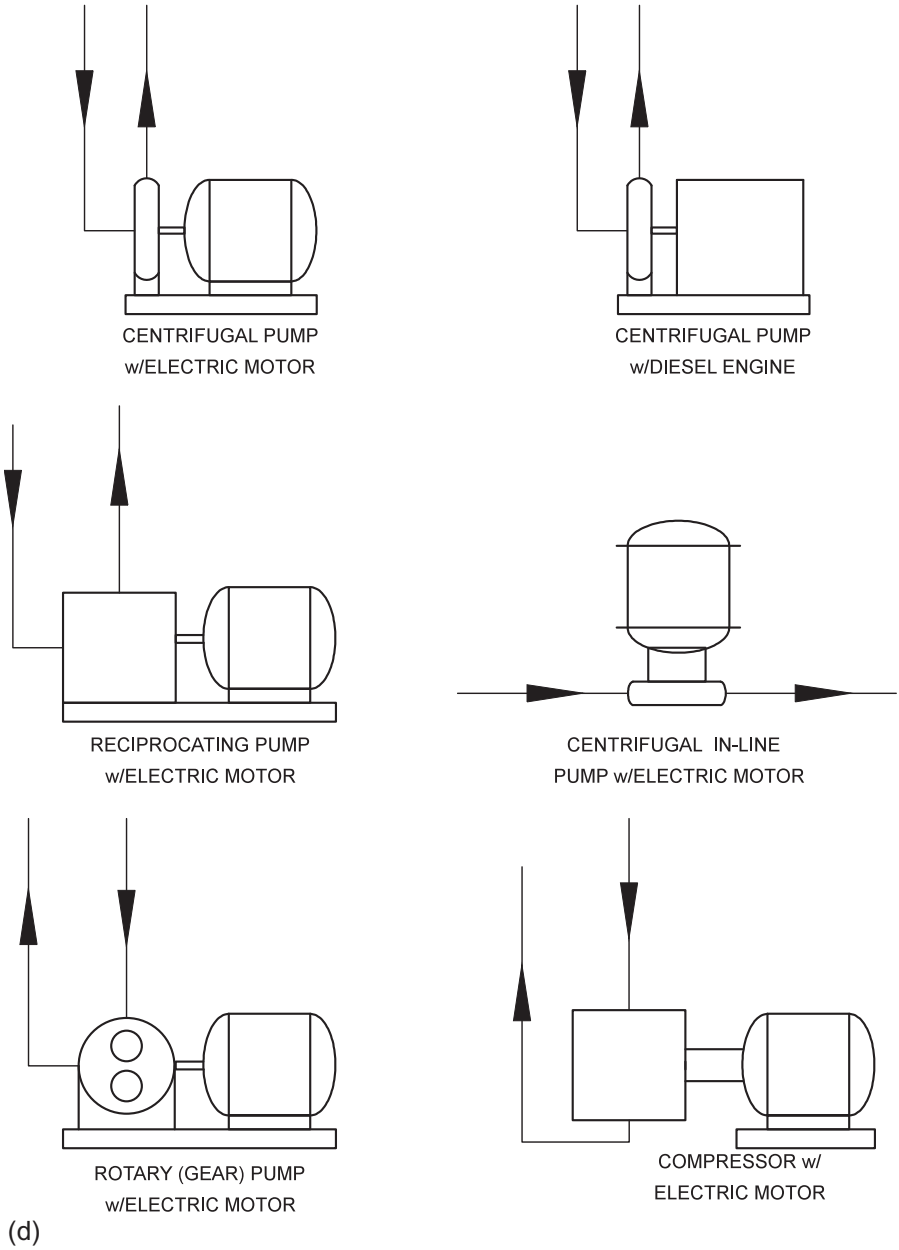

Figure 5.18, cont'd

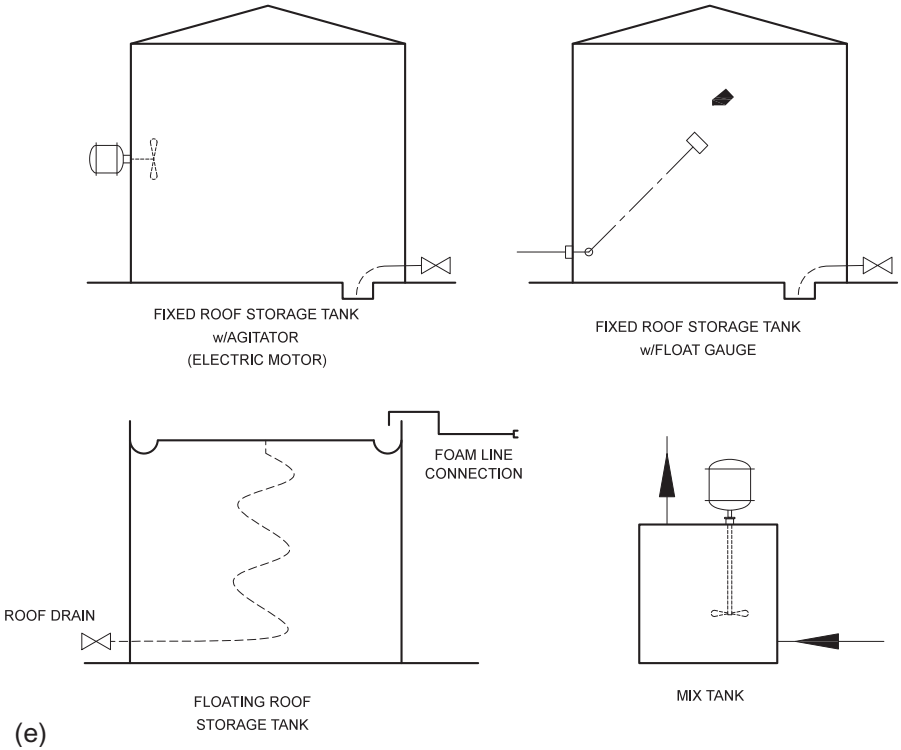

Figure 5.18, cont'd

temperature, or flow), while the second and/or third letter indicates the instrument type. Figure 5.20 illustrates the complete instrument letter combination designation. Each instrument and control loop requires a complete designation.

5.3.4 Safety device symbols and identification

A standard method for identifying, abbreviating, and symbolizing individual safety devices is needed to promote uniformity when describing or referring to safety systems. This method is used to illustrate safety devices on PFDs and P&IDs and to identify an individual safety device for any purpose.

Abbreviations and symbols recommended are derived from ISA Standard S5.1. Each safety device is identified by a system of letters used to classify it functionally. The functional identification includes one first letter covering the measured or initiating variable and one or more succeeding letters covering the function of the device. The term "safety" (S) should apply to emergency protective elements and is used as the second letter of sensing and self-acting device.

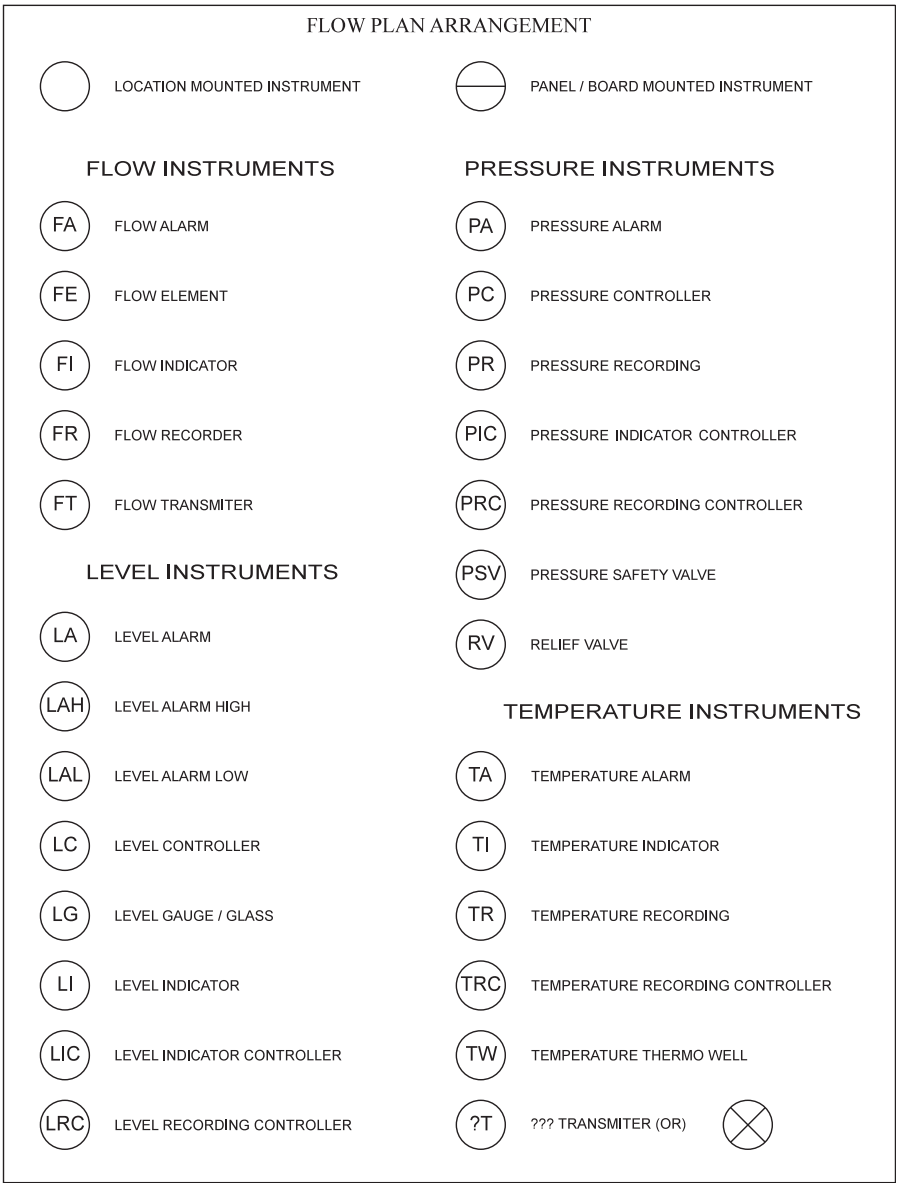

Figure 5.19 Flow diagram instrument symbols.

If two or more devices of the same type are installed on a single component, each device should be numbered consecutively and the number should follow the functional identification. If only one device is installed, the device number may be omitted.

A circular balloon is used to tag distinctive symbols, such as a pressure relief valve. In such instances, the line connecting the balloon to the instrument symbol is drawn

		second and third letters (type of device)											
		Controlling devices				Measuring devices			Alarm devices				
		Separate controllers											
		Recording	Indicating	Blind	Self-actuated (integral) regulating valves	Recording	Indicating	Glass devices for observation only (no measurement)	Recording	Indicating	Blind	Primary element	Wells	safety (relief) Valves
Process variable (or actuation)	First letter	-RC	-IC	-C	-CV	-R	-I	-G	-RA	-IA	-A	-E	-W	-SV
Temperature	T-	TRC	TIC	TC	TCV	TR	TI	XX	TRA	TIA	TA	TE	TW	TSV
Flow	F-	FRC	FIC	---	---	FR	FI	FG	FRA	FIA	---	FE	XX	---
Level	L-	LRC	LIC	LC	LCV	LR	LI	LG	LRA	LIA	LA	---	XX	---
Pressure	P-	PRC	PIC	PC	PCV	PR	PI	XX	PRA	PIA	PA	PE	XX	PSV
Density	D-	DRC	DIC	DC	---	DR	DI	XX	XX	XX	---	---	XX	---
Hand	H-	---	HIC	HC	HCV	XX	XX	XX	XX	XX	---	XX	XX	---
Moisture	M-	MRC	MIC	MC	---	MR	MI	XX	MRA	MIA	MA	ME	XX	---
Conductivity	C-	CRC	CIC	---	---	CR	CI	XX	CRA	CIA	CA	CE	XX	---
Speed	S-	SRC	SIC	SC	SCV	SR	SI	---	SRA	SIA	SA	---	XX	SSV
Viscosity	V-	VRC	VIC	---	---	VR	VI	VG	VRA	VIA	---	---	XX	---
Weight	W-	WRC	WIC	---	---	WR	WI	---	WRA	WIA	---	WE	XX	---

NOTES: (1) IMPOSSIBLE COMBINATION = XX (2) improbable combination = ---

Figure 5.20 Complete letter combination designations.

close to, but not touching, the symbol. In other instances, the balloon serves to represent the device proper. Table 5.1 illustrates recommended example symbols.

The complete identification of a safety device includes reference to the component that it protects. This is accomplished by following the device functional identification or device number, if applicable, with a component identification. Table 5.2 presents the recommended component identification method.

The first letter is the component type and must be one of the letters in the code column under component type. The letter "Z" is used to cover a component not listed. The second and third letters may be used to further define or otherwise modify the first character. If a modifier is not used, the character Φ is shown in lieu of the modifier.

The last four characters identify the specific component. These characters are user assigned and must be unique to the component at the particular location. Example applications of the recommended identification method are illustrated in Figure 5.21.

5.4 Flow plan arrangement

Once flow diagrams have been finalized, then they are stamped for "release" by a registered professional engineer, approving them for construction by the engineering group. The flow diagram is a dynamic document. They may be revised and updated

Table 5.1a **Sensing and self-acting device**

Variable	Safety device designation		Symbol	
	Common	**Instrument Society of America (ISA)**	**Single device**	**Combination device**
Backflow	Check valve	Flow Safety Valve	FSV	
Burner flame	Burner flame detector	Burner Safety Low	BSL	
Flow	High-flow sensor	Flow Safety High	FSH	FSHL
	Low-flow sensor	Flow Safety Low	FSL	
Level	High-level sensor	Level Safety High	LSH	LSHL
	Low-level sensor	Level Safety Low	LSL	
Pressure	High-pressure sensor	Pressure Safety High	PSH	PSHL
	Low-pressure sensor	Pressure Safety Low	PSL	
	Pressure relief or safety valve	Pressure Safety Valve	PSV	
			PSV	
	Rupture disc or safety head	Pressure Safety Element	PSE	
Pressure or vacuum	Pressure-vacuum relief valve	Pressure Safety Valve	PSV	
	Pressure-vacuum relief manhole cover	Pressure Safety Valve	PSV	
	Vent	None		
Vacuum	Vacuum relief valve	Pressure Safety Valve	PSV	
	Rupture disc or safety head	Pressure Safety Element	PSE	
Temperature	High-temperature sensor	Temperature Safety High	TSH	TSHL
	Low-temperature sensor	Temperature Safety Low	TSL	
Flame	Flame or stack arrestor	None		

Table 5.1b **Sensing and self-acting device**

Variable	Safety device designation		Symbol	
	Common	**Instrument Society of America (ISA)**	**Single device**	**Combination device**
Fire	Flame detector (ultraviolet/ Infrared)		USH	
	Heat detector (thermal)	Temperature Safety High	TSH	
	Smoke detector (ionization)		YSH	
	Fusible material	Temperature Safety Element	TSH	
Combustible gas connection	Combustible gas detector	Canalize Safety High	ASH	
Toxic gas connection	Toxic gas detector		AGH	

Actuated valves

Service	Common symbols		
Wellhead surface safety valve or underwater safety valve			Note: Show *USV* fee Underwater Safety Valves
Blow down valve	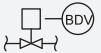		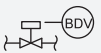
All other shut down valves			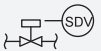

Table 5.2 **Component indentification**

	First letter		Second letter		Succeeding characters
	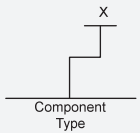		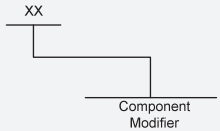		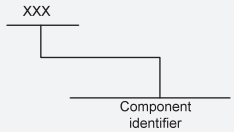
Code	**Component**	**Common modifiers**	**Code**	**Component**	
A	Atmospheric vessel (ambient temperature)	BH,BJ,BM	AA	B1-directional	User assigned identification unique to equipment at location
B	Atmospheric vessel (head)	AP,BC,BK,BM	AB	Blow case	
C	Compressor	NONE	AC	Boiler	
D	Enclosure	AE,AN,AU,BB	AD	Coalescer	
E	Fired or exhaust heated component	AL,AW,BN	AE	Compressor	
F	Flow line	A1-A9	AF	Contactor	
G	Header	AR,AS,AT,AY,AZ	AG	Control unit	
H	Heat exchanger	BG	AH	Departing	
J	Injection line	AR,AS,AT	AJ	Filter	
K	Pipe line	AA,AH,AQ	AK	Filter separator	
L	Platform	AG	AL	Forced draft	
M	Pressure vessel (ambient temperature)	AB,AD,AF,AJ,AK,AM AV, BD,BF,BH,BJ,BL,BM	AM	Free water knockout	
N	Pressure vessel (heated)	AC,AF,AM,AP,BC,BD BG, BJ,BK	AN	Generator	

Continued

Table 5.2 Continued

	First letter		Second letter		Succeeding characters
	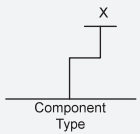		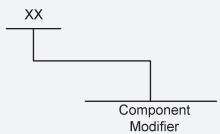		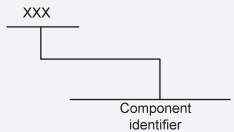
Code	**Component**	**Common modifiers**	**Code**	**Component**	
P	Pump	AX,BA,BE	AP	Heater	
Q	Wellhead	AR,AT,AY,AZ	AQ	Incoming	
Z	Other		AR	Injection, gas	
			AS	Injection, gas lift	
			AT	Injection, water	
			AU	Meter	
			AV	Metering vessel	
			AW	Natural draft	
			AX	Pipeline	
			AY	Production, hydrocarbon	
			AZ	Production, water	
			A1-A9	Flow line segment	
			BA	Process other	
			BB	Pump	
			BC	Reboiler	

	BD	Separator	
	BE	Service	
	BF	Scrubber	
	BG	Shell and tube	
	BH	Sump	
	BJ	Tank	
	BK	Treater	
	BL	Volume bottle	
	BM	Water treating	
	BN	Exhaust heated	
	ZZ	Other	

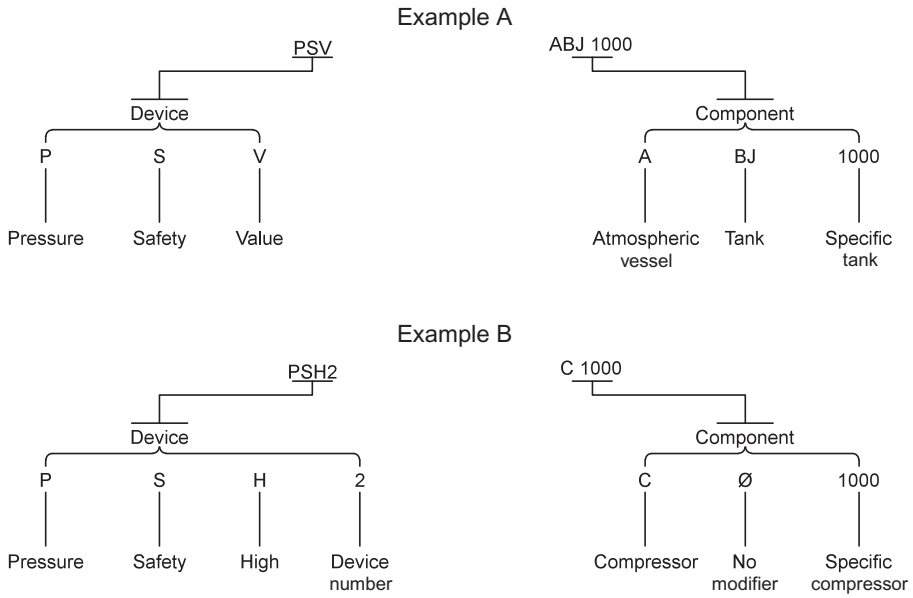

Figure 5.21 Examples of safety device identification.
(Courtesy of API RP 14C)

during the project's design phase to reflect the client changes or modifications imposed by the authorities having jurisdiction regulations. Continual review of relevant flow diagrams must occur on a regular basis.

The sequence of flow should be arranged in a logical order; specifically, gas lines are shown at the top of the drawing, while liquids are shown on the bottom of the drawing. Use the following checklist as an aid when developing a flow diagram:

- Avoid crossing lines where possible.
- Space mechanical equipment to avoid overcrowding.
- Add notes to symbols where necessary to clarify.
- Use arrows to show fluid direction.
- Show equipment numbers when it is necessary to identify mechanical equipment.
- Show control systems on the sketch. The scheme is frequently the most important part of a flow diagram.
- Show important valves, orifice flanges, and control valves.
- Show fluid flow directions through exchangers with arrows.
- Do not run lines diagonally across the drawing.
- Label feed lines entering the unit from the field where the line enters the nit. Label product lines leaving the unit by name.
- Do not draw lines any closer together than necessary.

Further reading

[1] API RP 14C, Recommended Practice for Analysis, Design, Installation, and Testing of Basic Surface Safety Systems for Offshore Production Facilities, seventh ed., API, Washington, DC, 2001.
[2] A. Parisher Roy, A. Rhea Bobert, Pipe Drafting and Design, third ed., Gulf Professional Publishing, Houston, Texas USA, 2012.
[3] D.R. Sherwood, J. Whistance Dennis, The Piping Guide, Syentek Book Company, San Francisco, USA, 1991.
[4] K.E. Arnold, M.I. Stewart, Surface production operations, in: Design of Gas-Handling Systems and Facilities, vol. 2, Elsevier, Boston, Mass. USA, 1999. Chapter 13-Pressure Relief.
[5] K.E. Arnold, M.I. Stewart, in: Petroleum Engineering Handbook, Facilities and Construction Engineering, vol. III, Society of Petroleum Engineers, Houston, Texas, USA, 2007. Chapter 10-Safety Systems.

Fluid flow and pressure drop

6

6.1 Introduction to facility piping and pipeline systems

After a well(s) is successfully drilled and completed, the fluid produced must be transported to a facility where it is separated into oil, water, and gas; conditioned to meet process input requirements; treated to remove impurities such as H_2S, CO_2, H_2O, and solids; processed into specific end products, for example, NGL and LPG; measured; and refined or stored for eventual sales. Figure 6.1 is a simplified block diagram that illustrates the basic "wellhead to sales" concept. The diagram begins with wellhead choke, which is used to control the rate of flow from each well. The fluid from the well travels through a *flow line* to the production facility where the fluid is separated, conditioned, treated, processed, measured, and refined or stored. Detailed discussions concerning oil, gas, and water handling and conditioning and processing facilities are covered in Volumes 1 and 2; pumps, compressors, and drivers are covered in Volume 4; and sizing, selecting, designing, installing, and operating process equipment-pressure vessels, heat exchangers, and storage tanks are covered in Volume 5.

The facility piping and pipeline systems associated with producing wells include, but are not limited to, the well flow line, trunk line, facility (on-plot) interconnecting equipment piping within the production facility, gathering or sales pipelines, and transmission pipelines. A brief description of the aforementioned facility piping and pipeline systems follows.

6.1.1 Flow line

A well flow line identifies a two-phase line from a wellhead to a production manifold or separator. The line between a production manifold and the first separator is sometimes referred to as a flow line but is generally referred to as production headers. Flow lines range in size from 2 in. (50.8 mm) to 20 in. (508 mm).

6.1.2 Trunk line

A trunk line is a larger line that connects two or more well flow lines that carries the combined well streams to the production manifold. Trunk lines range from 10 in. (25.4 mm) to 42 in. (106.8 mm).

6.1.3 Manifold

A manifold is a combination of pipes, fittings, and valves used to combine production from several sources and direct the combined flow into appropriate production equipment. A manifold may also originate from a single inlet stream and divide the stream into multiple outlet streams. Manifolds are generally located where many flow lines

Surface Production Operations. http://dx.doi.org/10.1016/B978-1-85617-808-2.00006-7
Copyright © 2016 Elsevier Inc. All rights reserved.

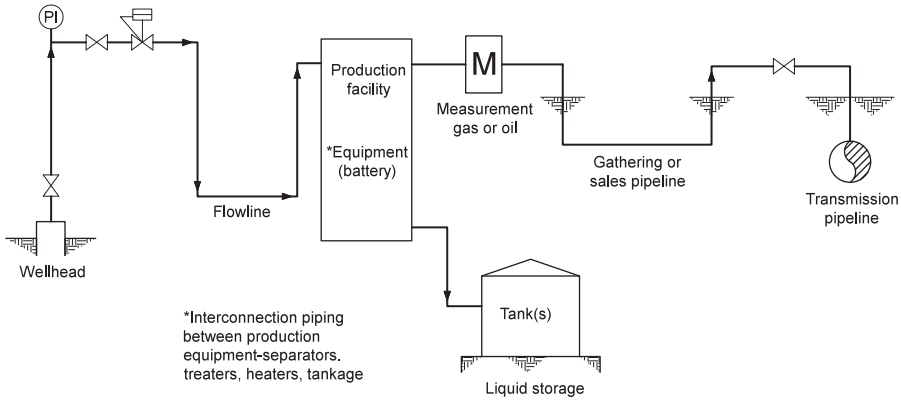

Figure 6.1 Block diagram of "wellhead to sales" concept.

come together, such as gathering stations, tank batteries, metering sites, separation stations, and offshore platforms. Manifolds also are used in gas lift injection systems, gas/water injection systems, pump/compressor stations, gas plants, and installations where fluids are distributed to multiple units. A production manifold accepts the flow streams from well flow lines and directs the combined flow to either test or production separators and tanks.

6.1.4 Separator station

A separation station separates the well stream into gas, oil, and/or water. Increasing the number of stages of separation increases the liquid recovery.

6.1.5 Compressor station

A compressor station consists of a gas compressor with its associated piping, coolers, and scrubbers. Low-pressure gas is normally boosted to sales or injection pressure by the compressor.

6.1.6 Pumping station

A pumping station consists of a pump and associated piping with the purpose of boosting liquid pressure to provide the energy for transmission and distribution of a liquid.

6.1.7 Production facility

A production facility is a facility for the field handling, conditioning, treating, processing, and/or measuring of gas, oil, and/or water.

6.1.8 Facility (on-plot) interconnecting piping

Facility piping consists of piping within a well-defined boundary of processing plants, piping compressor stations, or pumping stations. The piping is used for conducting a variety of fluids within those boundaries as required.

6.1.9 Transmission line

A transmission line consists of a cross-country piping system for transporting gas or liquids. The inlet is normally the custody transfer point or the production facility boundary with the outlet at its final destination, for example, processing plants and refineries. Transmission lines are usually long and have large diameters.

6.1.10 Gathering line

A gathering line consists of the line downstream of field manifolds or separators containing fluid flow from multiple wells and leading to the production facility. The gathering line may handle condensed hydrocarbon liquids, water, and corrosive gas and may require special design considerations.

6.1.11 Injection line

An injection line is similar to a gathering line but flows in the opposite direction (toward the wells). Injection lines transport high-pressure gas or water to wellheads for injection into the producing formation. Fluids are injected for reservoir enhancement, production enhancement, gas conservation, gas lift, produced water disposal, waterflood, and steamflood.

6.2 Introduction to fluid flow design

When designing facility piping and/or pipeline systems, it is essential to optimize the line size and determine pump and/or compressor requirements. This chapter reviews the fundamental fluid flow parameters that affect the design of facility piping and pipeline systems. In addition, it discusses how to determine the pressure drop in a piping system. Chapter 7 discusses how to determine piping line size and wall thickness.

Several factors that should be considered when determining the size of a line to meet the design requirements are the following:

- Volume of fluid
- Distance
- Pressure loss

6.2.1 Volume of fluid

The main consideration in line sizing is the volume of fluid that must be transported through the piping system. The exact volume is rarely known during the initial design stage. An estimate is normally made for initial design purposes. When the exact throughput is unknown or uncertain, designers must compromise constructing between a large line that is capable of delivering future projected volumes and one satisfying the current peak requirements only. Excess capacity reduces line profitability, while too small a line might need to be expanded in the future.

6.2.2 Distance

For pipelines, the distance between the entry point and the delivery point must be known. The designer needs to know the type of terrain the pipeline must traverse and the elevation profile along the right-of-way as it affects pressure loss and power requirements. The designer must also be knowledgeable of environmental conditions, ecological, historical, and archaeological sites as they might impact the pipeline routing, thereby increasing the length of the pipeline.

6.2.3 Pressure loss

The pressure loss as the fluid flows through the piping system is a key factor in both facility and pipeline design. An accurate pressure loss projection is critical as this will directly impact the pipeline's ability to meet design specifications. Available piping inlet pressure must be known, as well as if there is any particular outlet requirement at the delivery point.

The design process begins with sizing lines for a given fluid flow rate. One must conform to the following:

- Applicable codes, standards, and recommended practices
- Company design criteria as contained in applicable facility specifications
- Local regulatory requirements

The design process requires determination of the line size and wall thickness.

6.2.4 Line size determination

6.2.4.1 Pressure drop considerations

Pressure drop is used to avoid the installation of excessive brake horsepower required to boost the pressure for transporting the fluid. It is used to conform to the available piping inlet and discharge pressures and the allowable pressure gradient standards.

6.2.4.2 Fluid velocity considerations

Fluid velocities are used to prevent excessive water hammer, erosive velocities, and liquids and/or solids from dropping out of the flow stream.

6.2.5 Wall thickness determination

6.2.5.1 Maximum internal/external pressure considerations

Internal burst pressure is based on initial well conditions and other flow line considerations. The external collapse resistance is a consideration in offshore locations and in onshore locations where the overburden loads are large.

The applicable design standards are ASME B31.3, ASME B31.4, and ASME B31.8.

6.3 Fluid flow principles

6.3.1 Pressure changes

As a fluid flows through a pipe, its pressure changes. Calculation of these pressure changes is necessary to size pipe. Fluid pressure changes can occur due to the following:

- Acceleration effects
- Elevation effects
- Frictional effects

6.3.1.1 Acceleration effects

Acceleration effects in production facility piping systems are generally negligible and are ignored.

6.3.1.2 Elevation effects

Elevation effects are a result of hydrostatic gravity effects and can occur even in still fluid in inclined pipes. Elevation effects are important in wellbore pressure gradients, cross-country pipelines, and subsea pipelines. They are less important in production facilities and process piping, except pump suction lines and flow lines.

6.3.1.3 Frictional effects

Frictional effects, or pressure drop, are of primary importance in production facilities, flow lines, and pipeline design. As a fluid travels down a pipe, flow is retarded by frictional shear stresses with the pipe walls. The pressure levels decrease downstream as energy is used to overcome the frictional effects. The only exception occurs in downwardly inclined sections of pipe where elevation effects may overcome the pressure-decreasing effects of friction. The faster the fluid travels in the pipe, the greater the frictional stresses and the greater the pressure gradient.

6.3.2 Steady-state conditions

Most piping design is performed assuming nonfluctuating flow conditions. Two situations in which transients must be taken into account involve “water hammer” in liquid lines and “line pack and draft” in gas lines. Considerations of the above conditions are necessary primarily for pipeline operations.

6.4 Fluid types

Facility piping and pipelines transport various types of fluids. These include the following:

6.4.1 Gases

- Unprocessed natural gas (rich gas) consists primarily of methane with some heavier hydrocarbons.
- Processed natural gas (lean gas) consists primarily of methane, although small amounts of heavier fractions may still be present.
- Nonhydrocarbon components consist of nitrogen and hydrogen sulfide and carbon dioxide may also be present.
- Natural gas liquids (NGLs) consist primarily of the intermediate-molecular-weight hydrocarbon components such as propane, butane, and pentanes plus. Condensed hydrocarbons are removed so as to ensure that a liquid-free vapor of controlled BTU content is sold to the pipeline and obtain more revenue through sale of the NGL as a liquid product.

6.4.2 Crude oil

Crude oil consists of the heavier hydrocarbon fractions that are generally liquid at atmospheric conditions in storage tanks. Volatile oils are stabilized to prevent excessive vapor formation or "weathering" in storage or transport tankers. Piped fluid will remain liquid due to adequate operating pressure.

6.4.3 Water

Produced well streams frequently contain dissolved salts and minerals that are usually corrosive; thus, piping systems must also transport water.

6.4.4 Two-phase fluids

Two-phase fluids usually consist of natural gas and condensate or crude oil and associated gas. Flow lines from the well to the production facility are designed for two-phase flow.

6.4.5 Combinations

Produced well fluids contain the following:

- Hydrocarbons (gases and liquids)
- Water
- Varying amounts of CO_2 and H_2S

Liquid hydrocarbons and some water combine both physically and mechanically to form an emulsion that has a higher viscosity value than that of oil or water.

6.5 Fluid characteristics

6.5.1 Physical properties

The physical properties of the transported fluid play an important role in determining the pipe diameter and selecting the pipe material and the associated equipment. They are also important in determining the power required to transport the fluid. The most important fluid properties that affect piping and pipeline design are the following:

- Composition
- Density
- Viscosity
- Vapor pressure
- Water content
- CO_2 and H_2S content

6.5.1.1 Composition

Well stream compositions are usually stated as mole fractions. Gas streams consist of C_1 through C_6 and C_{7+}, while oil streams consists of C_1 through C_{10}. Knowledge of composition is necessary to predict fluid properties such as density, viscosity, and phase behavior. If a compositional analysis is not available, one must rely on a "black oil" characterization in which API gravity, gas gravity, gas-oil ratio, and water-liquid ratio are given. The use of empirical black oil property correlations provides reasonable values for density, viscosity, and phase behavior.

6.5.1.2 Density

There are several definitions of fluid density that are used in upstream oil and gas operations, such as density, specific gravity or relative density, and API gravity. The density of a fluid is defined as mass per unit volume with unit lbm/ft.^{3} (kg/m^3). Density is a thermodynamic property and is a function of pressure, temperature, and composition. Liquid densities are higher than gas densities and are affected less by pressure and temperature. Gas densities are increased by increasing pressure and decreased by increasing temperature. The density of a fluid is an important property in calculating the elevation pressure drop since elevation pressure drop is the product of density and elevation change.

A liquid's density is often specified by giving its specific gravity relative to water at standard conditions of 60 °F and 14.7 psia (15.6 °C and 101.4 kPa). Thus,

Field units:

$$\rho = 62.4(\mathrm{SG}) \tag{6.1a}$$

SI units:

$$\rho = 1000(\mathrm{SG}) \tag{6.1b}$$

where

ρ = density of liquid (lb/ft.^{3} (kg/m^3)),
SG = specific gravity of liquid relative to water.

API gravity is a special function of relative density. It is a reverse graduation scale of relative density, where lighter fluids have higher API gravities. For example, a condensate would typically have an API gravity between 30 and 40, while water would have an API gravity of 10. API gravity is defined as

Field units:

$$\text{API} = \frac{141.5}{(\text{SG at } 60°\text{F})} - 131.5 \tag{6.2a}$$

SI units:

$$\text{API} = \frac{141.5}{\text{SG at } 15.6°\text{C}} - 131.5 \tag{6.2b}$$

The density of a mixture of oil and water can be determined by the volume weighted average of the two densities and is given by

$$\rho = \frac{\rho_w Q_w + \rho_o Q_o}{Q_T} \tag{6.3}$$

where

ρ = density of liquid (lb/ft.^{3} (kg/m^3)),
ρ_o = density of oil (lb/ft.^{3} (kg/m^3)),
ρ_w = density of water (lb/ft.^{3} (kg/m^3)),
Q_w = water flow rate (BPD (m^3/h)),
Q_o = oil for rate (BPD (m^3/h)),
Q_T = total liquid for rate (BPD (m^3/h)).

The specific gravity or relative density of a liquid is indicated relative to water, and that of a gas is indicated relative to air. The specific gravity is measured at certain pressure and temperature conditions. These include the following:

- "Standard" conditions are taken as 60 °F (15.6 °C) and 14.7 psi (1.01325 bar) and are widely used.
- "Normal" conditions are taken as 32 °F (0 °C) and 14.67 psi (1.01325 bar) and are less widely used.

Attention should be paid to the condition specified, whether standard or normal condition, as using the wrong conditions by mistake can make a difference of about 5% volume, which can be significant. The average specific gravity of some oil field liquids are the following:

• Crude oil	0.825
• Condensate	0.75
• Butane	0.58

The specific gravity of an oil and water mixture can be calculated by

$$(\mathrm{SG})_{\mathrm{m}} = \frac{(\mathrm{SG})_{\mathrm{w}} Q_{\mathrm{w}} + (\mathrm{SG})_{\mathrm{o}} Q_{\mathrm{o}}}{Q_{\mathrm{T}}} \tag{6.4}$$

where

$(\mathrm{SG})_{\mathrm{m}}$ = specific gravity of liquid,
$(\mathrm{SG})_{\mathrm{o}}$ = specific gravity of oil,
$(\mathrm{SG})_{\mathrm{w}}$ = specific gravity of water,
Q_{w} = water flow rate (BPD (m^3/h)),
Q_{o} = oil for rate (BPD (m^3/h)),
Q_{T} = total liquid for rate (BPD (m^3/h)).

Unlike liquid, which is incompressible, gas is compressible. Gas density is a function of pressure, temperature, and molecular weight. The specific gravity or relative density of a natural gas at standard conditions of pressure and temperature is determined by its apparent molecular weight. It is often expressed as a specific gravity, which is the ratio of the density of the gas at standard conditions of pressure and temperature to that of air at standard conditions of pressure and temperature. Since the apparent molecular weight of air is 29 lb/lb-mole (kg/kmole), the specific gravity of a gas is given by

$$S = \frac{(\mathrm{MW})}{29} \tag{6.5}$$

where

S = specific gravity of gas relative to air,
(MW) = apparent molecular weight of gas.

The density of a gas under specific conditions of pressure and temperature is given by

Field units:

$$\rho_{\mathrm{g}} = 2.70 \frac{SP}{TZ} \tag{6.6a}$$

SI units:

$$\rho_{\mathrm{g}} = 3.48 \frac{SP}{TZ} \tag{6.6b}$$

Field units:

$$\rho_{\mathrm{g}} = 0.093 \frac{(\mathrm{MW})P}{TZ} \tag{6.7a}$$

SI units:

$$\rho_{\mathrm{g}} = 0.1203 \frac{(\mathrm{MW})P}{TZ} \tag{6.7b}$$

where

ρ_g = density of gas (lb/ft.^{3}(kg/m^3)),
P = pressure (kPa (psia)),
T = temperature (K (°R)),
Z = gas compressibility factor,
S = specific gravity of gas relative to air,
(MW) = apparent molecular weight of the gas.

6.5.1.3 Viscosity

Viscosity is a measure of a fluid's internal resistance to flow. It is determined either by measuring the shear force required to produce a given shear gradient or by observing the time required for a given volume of liquid to flow through a capillary or restriction. When measured in terms of force, it is called absolute or dynamic viscosity. When measured with respect to time, it is called kinematic viscosity. A fluid's kinematic viscosity is equal to its absolute viscosity divided by its density. The unit of absolute viscosity is poise or centipoise (cP). The unit of kinematic viscosity is stoke or centistokes (cSt). The relationship between absolute and kinematic viscosity is given by

$$\mu = \gamma\rho \tag{6.8}$$

where

μ = absolute viscosity (cP (Pa s)),
γ = kinematic viscosity (cSt (m^2/s)),
ρ = density (lb/ft.^{3} (kg/m^3)),
SG = specific gravity relative to water.

In the metric system, if the absolute viscosity is given in centipoise, then the kinematic viscosity is in centistokes and the unit of density to use in Equation 6.8 is g/cm^3. Since water has a density of 1 g/cm^3, Equation 6.8 can be rewritten:

Field units:

$$\mu = (\mathrm{SG})\gamma \tag{6.9a}$$

SI units:

$$\mu = 1000(\mathrm{SG})\gamma \tag{6.9b}$$

where

m = absolute viscosity (Pa s (cP)),
(SG) = specific gravity of liquid relative to water,
γ = kinematic viscosity (m^2/s (cSt)).

As shown in Figure 6.2, liquid water at 70 °F has an absolute viscosity of approximately one centipoise (cP). The common English system unit of viscosity is lbm/ft./s. The conversion between metric and English units is

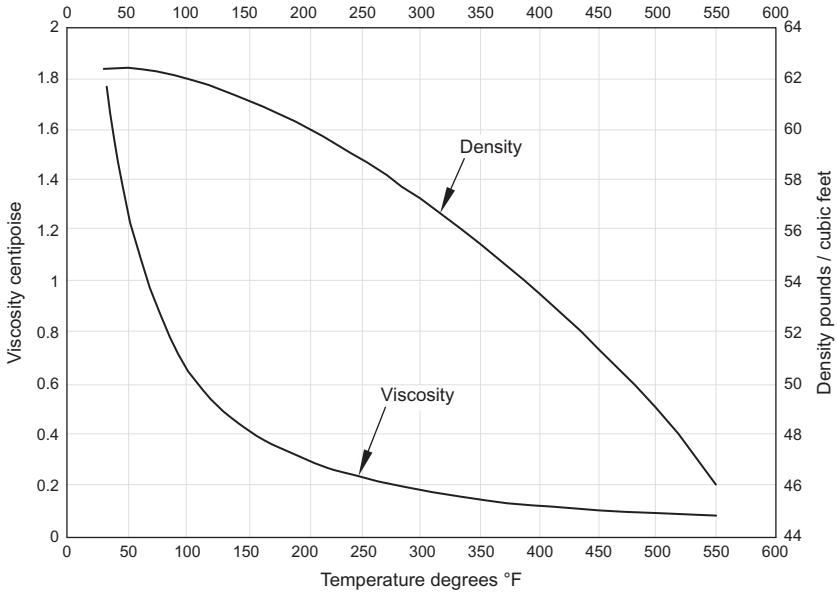

Figure 6.2 Physical properties of water.
Courtesy of Ingersoll Rand.

$$1\,\text{cP} = 6.72 \times 10^{-4}\ \text{lbm/ft.} - s \tag{6.10}$$

Fluid viscosity varies with temperature. For liquids, viscosity decreases with increasing temperature. The viscosity of oil is highly dependent on temperature and is best determined by measuring the viscosity at two or more temperatures and interpolating to determine the viscosity at any other temperature. When data are not available, the viscosity of a crude oil can be approximated from Figure 6.3, provided the oil is above its cloud point temperature, that is, the temperature at which wax crystals begin to form when the crude oil is cooled. Figure 6.3 presents kinematic viscosity for "gas-free" or stock tank crude oils. Although viscosity is generally a function of API gravity, it is not always true that a heavier crude (lower API gravity) has a higher viscosity than a lighter crude (higher API gravity). Therefore, Figure 6.2 should be used with caution. As shown in Table 6.1, the viscosity of crude varies from very low to very high.

Figure 6.4 can be used to account for the fact that oil at higher pressures has more light hydrocarbon components and so has a higher gravity and lower viscosity than at stock tank conditions. This correction also can be made by using Figure 6.3 with the API gravity of the oil at the higher pressure, rather than its stock tank gravity.

The viscosity of a mixture of oil and water is not the weighted average of the two viscosities. Depending on the ratio of water and oil and the degree of mixing

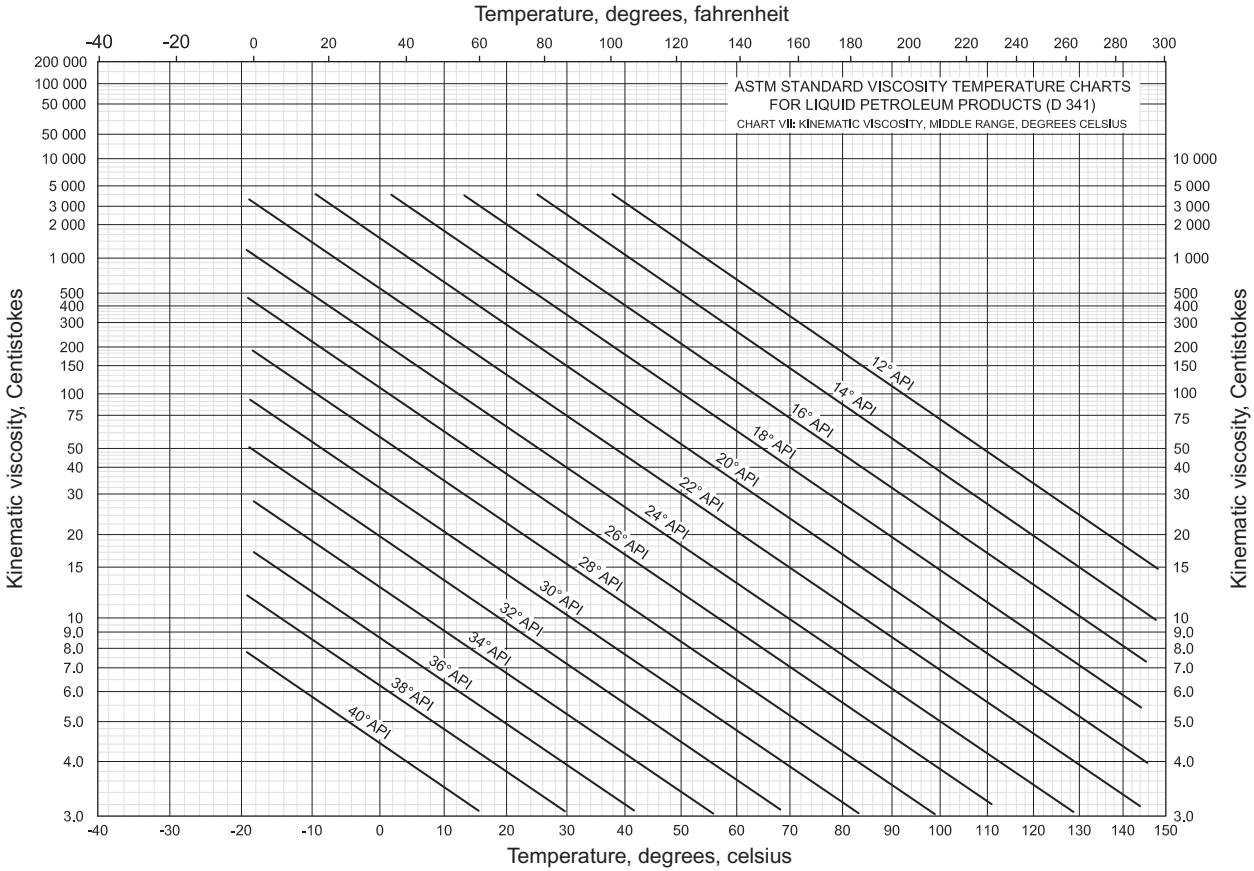

Figure 6.3 Kinematic viscosity versus temperature for different API gravity oils.

Table 6.1 Crude oil properties

Crude	Country	Density (15 °C) (kg/m^3)	Viscosity (40 °C) cSt
Ekofisk	Norway	804	2
Arabian Light	Saudi Arabia	859	6
Kuwait	Kuwait	870	10
Bintulu	Sarawak	886	6
Schoonebeek	Netherlands	904	200
Langunillas	Venezuela	967	800
Boscan	Venezuela	1005	20,000

(shear rate) in the system, the viscosity of the mixture can be as much as 10-20 times that of oil. The following equation has proved useful in analyzing piping systems:

$$\mu_{\text{eff}} = \left(1 + 2.5\phi + 10\phi^2\right)\mu_c \tag{6.11}$$

where

μ_{eff} = effective viscosity (cP (Pa s)),
μ_c = viscosity of the continuous phase (cP (Pa s)),
ϕ = volume fraction of the discontinuous phase.

Normally, the breakover between an oil-continuous and a water-continuous phase occurs between 60% and 70% water cut.

Gas viscosity depends on temperature, relative density, and pressure. The viscosity of a natural gas can be determined from Figure 6.5. Figure 6.5 shows the viscosity variation of hydrocarbon gas with temperature and pressure. For most production facility gas piping applications, a viscosity of 0.012 cP can be assumed.

6.5.1.4 Vapor pressure

Vapor pressure is the pressure exerted by the vapor phase of a fluid in a confined container at a given temperature. Vapor pressure increases with temperature. Figure 6.6 shows the variation of vapor pressure with temperature for certain petroleum products. Vapor pressure determines the operating conditions at which a fluid moves from single-phase flow, either gas or liquid, to two-phase flow, a mixture of gas and liquid.

6.5.1.5 Water, CO_2, and H_2S content

Water content and CO_2 and H_2S levels in the transport fluid are important to know because their presence will cause internal corrosion in facility piping and pipelines. These parameters are required to select the right pipe material, or coating, to prevent the pipeline from internal corrosion.

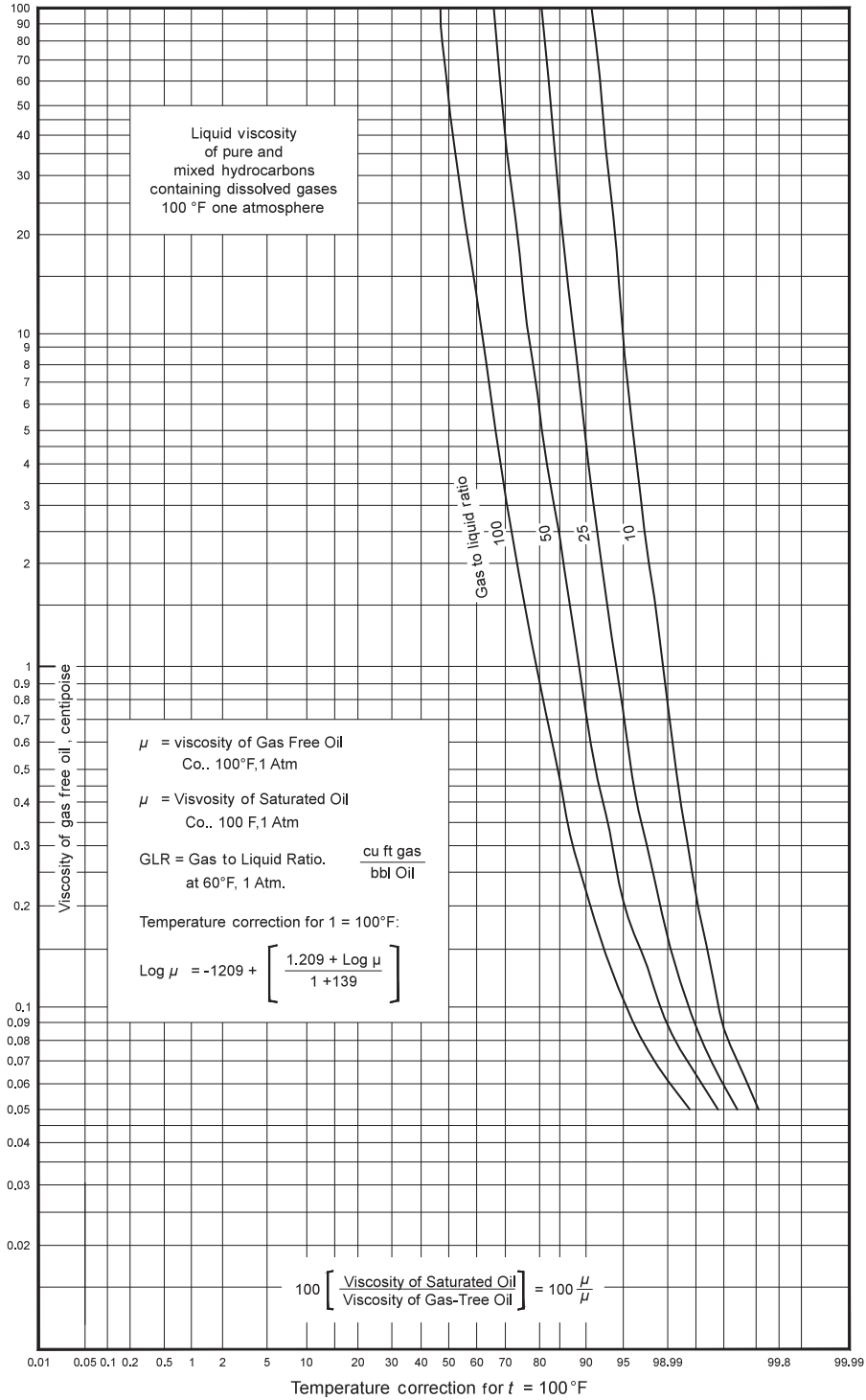

Figure 6.4 Liquid viscosity of pure and mixed hydrocarbons containing dissolved gases.

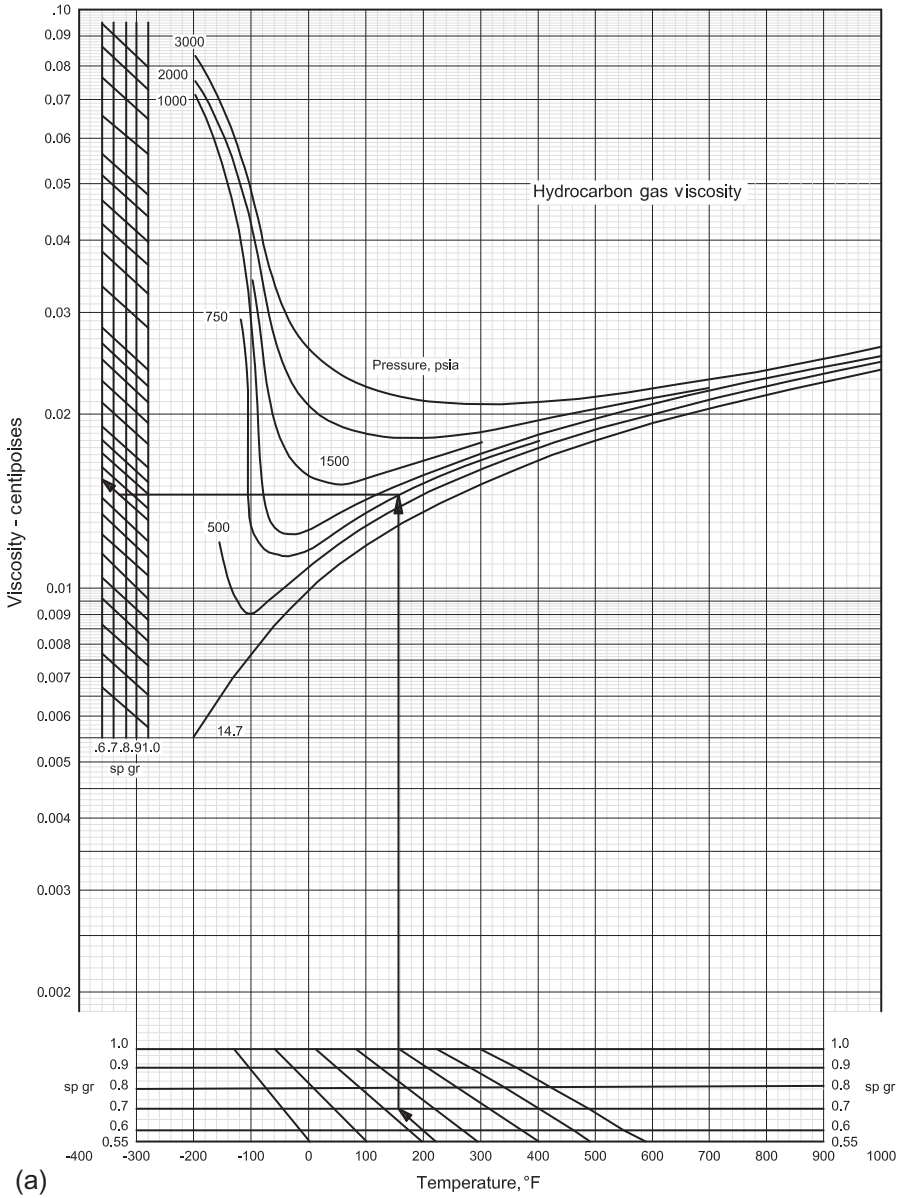

Figure 6.5 (a) Hydrocarbon gas viscosity (field units) (Courtesy of GPSA).

(Continued)

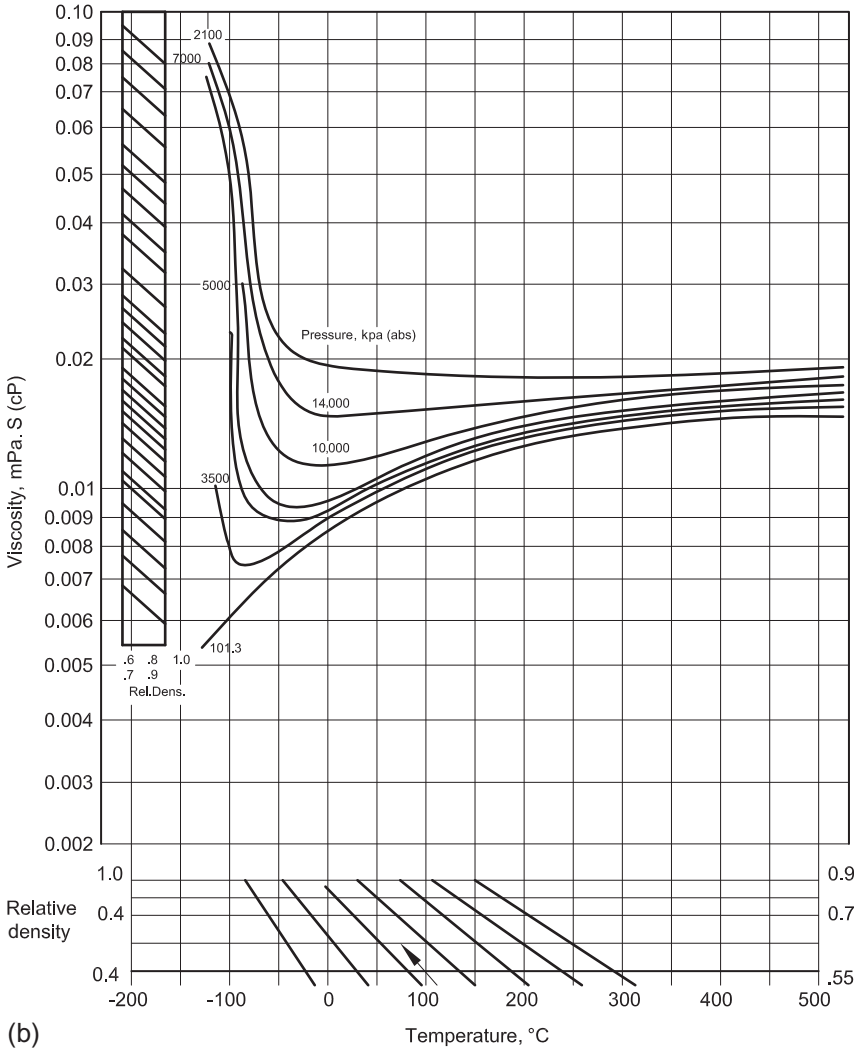

Figure 6.5 Continued. (b) Hydrocarbon gas viscosity.

6.5.2 Phase behavior

Phase behavior refers to the mole fraction ratio of vapor to liquid of the fluid and a prediction of its value as a function of pressure, temperature, and composition. For NGL and volatile oils, calculation of the fluid phase behavior is necessary for the determination of pressure drop-flow rate relations. If the fluid composition is known, flash calculations can be performed to determine the phase envelope and the relative amounts of liquid and vapor in the two-phase region.

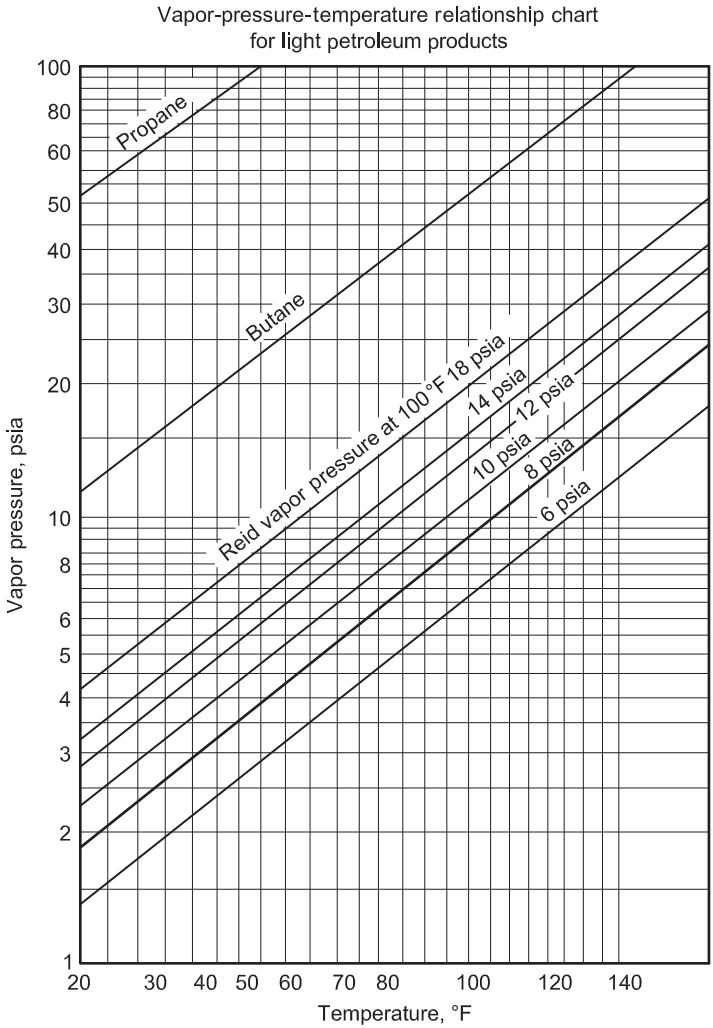

Figure 6.6 Vapor-pressure-temperature relationship chart for light petroleum products.

6.5.3 Waxy crude

The design and operation of facility piping and pipelines carrying crudes with very high pour points or with high wax content require special consideration. This section discusses waxy crude, its behavior and special design, and operational challenges involved in both the design and operation of waxy piping and pipelines.

6.5.3.1 Paraffin wax

Waxy crude contains heavy paraffins. Heavy paraffins are saturated hydrocarbons that typically contain between 18 and 34 carbon atoms in a chain. The wax formed is of crystalline structure and can be soft with a high percentage of trapped oil similar to Vaseline or can form hard deposits like candle wax.

6.5.3.2 Waxy crude behavior

When the temperature drops too low for wax to remain dissolved in a crude, it precipitates out of solution and deposits itself on the inside wall of facility piping and pipelines or inside facility process components. The "cloud point" or the "wax appearance temperature" (WAT) is defined as the temperature at which wax crystals can first be detected. When the temperature in facility piping or pipeline system drops below the cloud point, wax crystals begin to form and deposit. Any additional decrease in temperature causes additional wax to come out of solution until the crude in the piping system gels up. The temperature at which this occurs is called the "pour point." When the crude in the pipe gels up, a certain force (yield stress) is required to shear the waxy crude and restart the flow.

In practice, a crude is considered to have a high wax content when there is more than 10% wax, while a crude is considered to have low wax content when there is less than 4%. Some examples of low-wax-content crudes are shown in Table 6.2. Even though the wax content of each of the crudes is 4%, there are significant differences in pour point, that is, the temperature at which the crude gels up. As is shown, the Malaysian Labuan crude would gel up at 48 °F (9 °C), while the Saudi Arabian light crude would gel only if the temperature drops below −32.8 °F (−36 °C).

Table 6.3 shows some examples of crude with high wax content and relatively high pour points. Temperatures in a pipeline between 68° and 86 °F (20-30 °C) are not uncommon, such as the shutdown of a subsea pipeline. Under this condition, these crudes will gel up. To understand the behavior of waxy crude, one needs to know the following:

- Cloud point
- Pour point
- Wax content
- Yield stress

Table 6.2 Low-wax-content crude oils

Name	Density (kg/m^3)	Wax content (shell) (%wt)	Pour point (ASTM D97) °C
Arabian Light	854	4	−36
Kuwait	870	4	−21
Basrah	855	4	−12
Forties	839	4	0
Labuan	863	4	9

Table 6.3 High-wax-content crude oils

Name	Density (kg/m^3)	Wax content (%wt)	Pour point (ASTM D97) °C
Cabinda	868	10	21
Gamba	868	12	33
Shengli	908	12	27
Sarir	847	16	24
Beatrice	832	16	27
Bombay High	832	16	33
Taching	864	20	33

6.5.3.3 Wax prediction

The potential for wax formation in piping and pipelines can be predicted by sampling and analyzing the crude for the following properties:

- Cloud point—cold finger technique or cross polar microscopy
- Pour point—differential scanning calorimetry
- Wax content—solid-phase analysis
- Carbon distribution—gas chromatography

In order to achieve accurate results, it is imperative representative samples must be taken and that the correct experimental procedures be followed. Even if this is done, reproducibility is difficult, and one is very likely to get a range of results, rather than one definitive value, for example, cloud point.

6.5.3.4 Design and operational challenges

Waxy crude with high cloud points and pour points poses special design and operational challenges. These include the following:

- Wax deposits on the internal pipe walls of flow lines and pipeline reduce internal diameter, which causes pressure and production losses.
- Removal of wax deposits requires production shutdowns or extra pigging, which results in loss of revenue or extra costs.
- Flow lines and pipelines may need to be designed with costly insulation to ensure the crude remains warm and above the wax deposition temperature.
- Chemicals are added to prevent wax formation and deposition, which is expensive.
- Chemicals may need to be injected before a shutdown to prevent crude from gelling up in the pipeline, if it cools below the pour point.

Designers and pipeline operations personnel need to thoroughly evaluate the aforementioned factors when confronted with waxy crude. When deciding how to manage the production and transportation of waxy crude, it is imperative that one carefully consider both capital (CAPAX) and operating expenses (OPEX) over the life cycle of the field for different options.

6.5.3.5 Wax management

A development plan for a waxy crude field will be different and more likely more expensive than a nonwaxy crude. Thus, early prediction is important. There are commercially available wax prediction tools available that will predict the wax deposition rate. But one needs to be cautious as the results may not be reliable.

There are several options to choose from when one needs to manage waxy crude production. These include the following:

- Wax inhibitors, growth modifier, or dispersants
- Pour point reducer
- Dilution (reduces wax content)
- Pipeline insulation
- Heating or steam tracing the pipeline
- Regular pipeline pigging

6.6 Flow conditions

6.6.1 Flow potential

The flow potential is the total pressure drop available to transport fluid in a section of pipe. This potential, the difference in inlet and discharge pressures, includes the elevation pressure effect due to hydraulic pressure in an inclined pipe. If the flow potential does not equal or exceed that required to flow a given quantity of fluid, a larger diameter pipe, pump, or compressor must be specified.

6.6.2 Flow regimes

The two basic types of flow in pipe are laminar and turbulent. At low velocities in small pipes carrying viscous fluid, fluid particles follow smooth paths downstream and a parabolic velocity profile exists. As the velocity increases, a "critical" point is reached at which the flow regime changes to turbulent flow. This "critical" point varies depending upon the pipe diameter, the fluid density and viscosity, and the velocity of flow.

In laminar flow, the pipe wall roughness has no effect on pressure drop, and pressure drop is inversely proportional to fluid viscosity. At higher velocities of less viscous fluid in larger pipes, the fluid motion becomes more chaotic, and individual fluid particles have strong, erratic components of velocity. In turbulent flow, fluid viscosity has little effect on pressure drop and pipe wall roughness is important.

6.6.3 Reynolds number

The Reynolds number (Re) combines the effects of fluid density, viscosity, velocity, and pipe diameter in a dimensionless parameter that relates the ratio of inertia forces to viscous forces:

Field units:

$$\mathrm{Re} = \frac{\rho DV}{\mu'} = \frac{1488DV\rho}{\mu} = \frac{124dV\rho}{\mu} = \frac{7738(\mathrm{SG})dV}{\mu} \tag{6.12a}$$

SI units:

$$\mathrm{Re} = \frac{\rho DV}{\mu} \tag{6.12b}$$

where

Re = the Reynolds number, dimensionless,
ρ = density (lb/ft.^{3} (kg/m^3)),
d = pipe ID (mm (in.)),
D = pipe ID (t (m)),
V = average velocity (ft./s (m/s)),
μ' = viscosity (lb/ft./s [μ (cP) × 0.000672]),
μ = absolute viscosity (Pa s (cP)),
(SG) = specific gravity of liquid relative to water.

At the Reynolds numbers less than 2000, the flow is laminar, and when the Reynolds number is greater than 4000, the flow is turbulent. In the "critical" or "transition" zone, $2000 < \mathrm{Re} < 4000$, the flow is unstable and could be either laminar or turbulent. The following the Reynolds numbers are accepted as the limits between laminar and turbulent flow:

Laminar flow: $\mathrm{Re} < 2000$
Transition flow: $2000 < \mathrm{Re} < 4000$
Turbulent flow: $4000 < \mathrm{Re}$

6.6.3.1 Reynolds number for liquids

The Reynolds number can be expressed in more convenient "oil field" terms. For liquids, Equation 6.12 can be expressed as

Field units:

$$\mathrm{Re}_1 = 92.1\frac{(\mathrm{SG})Q_1}{d\mu} \tag{6.13a}$$

SI units:

$$\mathrm{Re}_1 = 353.13\frac{(\mathrm{SG})Q_1}{d\mu} \tag{6.13b}$$

where

μ = absolute viscosity (Pa s (cP)),
d = pipe ID (in. (mm)),
(SG) = specific gravity of liquid relative to water,
Q_1 = liquid flow rate (BPD (m^3/h)).

Derivation of Equation of 6.13a:

μ is in cP, ρ is in lb/ft.^{3}, d is in inches, and Q is in ft.^{3}/s.
$\mu' = \mu/1488$
$\rho = 62.4(\mathrm{SG})$
$D = d/12$

Substituting into Equation 6.12a,

$$\mathrm{Re} = \frac{(62.4)(\mathrm{SG})dV(1488)}{12\mu} = \frac{7738(\mathrm{SG})dV}{\mu}$$

Since $V = Q/A$,

$$Q = (Q_{\mathrm{L}})\left(5.61\,\mathrm{ft.}^3/\mathrm{Bbl}\right)\left(\frac{1\,\mathrm{day}}{24\,\mathrm{h}}\right)\left(\frac{1\,\mathrm{h}}{3600\,s}\right) = 6.49 \times 10^{-5} Q_{\mathrm{L}}$$

and

$$A = \frac{\pi D^2}{4} = \frac{\pi d^2}{(4)(144)}$$

substituting

$$V = \frac{Q_{\mathrm{L}}\left(6.49 \times 10^{-5}\right)(4)(144)}{\pi d^2}$$

Rearranging and substituting into Equation 6.12a,

$$\mathrm{Re}_1 = \frac{92.1(\mathrm{SG})Q_1}{d\mu}$$

$$\mathrm{Re} = \frac{92.1(\mathrm{SG})Q_{\mathrm{L}}}{d\mu}$$

6.6.3.2 Reynolds number for gases

The Reynolds number for gas flow can be shown to be

Field units:

$$\mathrm{Re}_{\mathrm{g}} = 20{,}000\frac{Q_{\mathrm{g}}S}{d\mu} \tag{6.14a}$$

SI units:

$$\mathrm{Re_g} = 0.428\frac{Q_g S}{d\mu} \tag{6.14b}$$

where

Q_g = gas flow rate (MMSCFD (std m^3/h)),
S = specific gravity of gas relative to air,
d = pipe ID (in. (mm)),
μ = absolute viscosity (Pa s (cP)).

Derivation of Equation 6.14a:

T = temperature (°R),
P = pressure (psia),
ρ = fluid density (lbm/ft.^{3}),
Q = gas flow rate (ft.^{3}/s),
Z = compressibility, dimensionless,
$\overline{V}$ = specific volume (ft.^{3}/lb),
Re = the Reynolds number, dimensionless.

Ideal gas law:

$$\frac{P\overline{V}}{ZT} = \frac{P_s\overline{V_s}}{Z_s T_s}$$

At standard conditions,

$$P_s = 14.7$$

$$\overline{V_s} = \frac{1}{\rho_s} = \frac{1}{0.0764(S)}$$

$$T_s = 520$$

$$Z_s = 1.0$$

$$\rho = \frac{1}{\overline{V}} = 0.0764(S)\left(\frac{P}{14.7}\right)\left(\frac{520}{TZ}\right)$$
$$= 2.70\frac{SP}{TZ}$$

Given:

D = $d/12$
μ^1 = $\mu/1488$
V_{ACT} = actual gas velocity (ft./s)

Since

$$V_{\text{act}} = \frac{Q_{\text{act}}}{A}$$

$$Q_{\text{act}} = \left(Q_{\text{g}} \times 10^6 \frac{\text{SCF}}{\text{MMSCF}}\right)\left(\frac{1\,\text{day}}{24\,\text{h}}\right)\left(\frac{1\,\text{h}}{3600\,\text{s}}\right)\left(\frac{14.7}{P}\right)\left(\frac{TZ}{520}\right)$$
$$= 0.327\left(\frac{TZQ_{\text{g}}}{P}\right)$$

$$A = \pi D^2$$
$$= \frac{\pi d^2}{(4)(144)}$$

substituting

$$V_{\text{act}} = \frac{0.327\left(\frac{TZQ_{\text{g}}}{P}\right)}{0.00545d^2}$$
$$= 60\left(\frac{TZQ_{\text{g}}}{Pd^2}\right)$$

$$\text{Re} = \frac{\left(2.7\left(\frac{SP}{TZ}\right)\right)\left(\frac{d}{12}\right)\left(60\left(\frac{TZQ_{\text{g}}}{Pd^2}\right)\right)}{\mu/(1488)}$$
$$= 20,100\left(\frac{Q_{\text{g}}S}{d\mu}\right)$$

6.6.4 Pipe roughness

In laminar flow, the pipe wall roughness does not materially affect the pressure gradient. In turbulent flow, the pipe wall roughness has a marked effect on the pressure gradient. As the Reynolds number increases, the fluid boundary layer on the pipe wall becomes thinner, exposing the irregularities in the pipe wall to the high velocity outside the boundary layer. Techniques for quantifying relative roughness, or ratio of wall irregularity height to pipe diameter, are discussed later in this chapter.

6.6.5 Rate

Fluid flow rate ($V = Q/A$) through a pipe is primarily controlled by pressure loss due to friction. The higher the flow rate, the higher the frictional pressure drop. Reducing frictional pressure drop requires lower velocities. The capacity of a pipe is determined by the velocity developed at the design or allowable pressure drop (flow potential).

6.6.6 Velocity limitations

When fluid flow rates increase, fluid velocities can increase until the pipe wall is actually damaged. The avoidance of pipe damage sets an upper limit on the capacity of the pipe. One criterion used to estimate the critical fluid velocity above which pipe damage may occur is found in *API RP 14E*, which suggests that a critical erosional velocity is expressed as

$$V_e = \frac{C}{\sqrt{\rho}} \tag{6.15}$$

where

ρ = mixture density (lbm/ft.^{3}),
V_e = erosional velocity threshold (ft./s),
C = 125 for intermittent service,
= 100 for continuous service,
= 60 for corrosive service.

6.6.7 Temperature

Fluid temperature can affect the pressure drop-flow rate relations and thus affects the choice of pipe size. Fluid temperature can also affect the fluid density and thus influence the erosional velocity limitations.

6.6.7.1 Gas considerations

When a gas with even small amounts of heavier hydrocarbons (propane and heavier) is compressed and/or cooled sufficiently, the heavier components may condense into a separate liquid phase. The presence of two phases flowing concurrently in a pipe causes a considerably higher frictional pressure drop than an equivalent mass flow rate of gas in the same diameter pipeline.

The presence of even 1% by volume liquid phase can cause a 20-30% increase in frictional pressure drop. The presence of liquid can also increase elevation pressure drop. Since liquids tend to be much heavier than gases, the presence of liquid in the flow increases the effective fluid density, thus increasing hydrostatic pressure.

6.6.7.2 Liquid considerations

Temperature strongly influences liquid viscosity. Viscosity increases exponentially with decreasing temperature. The increasing viscosity causes a decreasing Reynolds number and an increasing frictional pressure gradient. If the Reynolds number becomes sufficiently low and the flow becomes laminar, the frictional pressure gradient becomes inversely proportional to viscosity. Quantitative methods for calculating temperature effects in liquids are discussed later in this chapter.

6.7 Special considerations

6.7.1 Emulsions

The characteristics of oil-water emulsions vary greatly and are difficult to characterize or predict. Caution should be exercised and experienced help sought in dealing with emulsion in fluid flow calculations.

6.7.2 Pigging

A pig is a spherical or cylindrical device that is pumped through a pipe. A detailed discussion on pigging is covered in Chapter 13.

6.7.2.1 Liquid removal

Liquid accumulation at the bottom of a gas pipeline can cause erratic "slug" flow of accumulated liquids and a reduction of the effective pipe cross-sectional flow area, which reduces line capacity. The passage of a pig through the line functions like a piston and pushes the accumulated liquid toward a slug catcher, thus restoring the line capacity. Pigs used for liquid removal are generally inflatable spheres, rather than like rubber balls. By adjusting the inflation pressure of the sphere, the tightness of fit in the pipe can be altered.

6.7.2.2 Corrosion protection

Water in a low section of pipe can become a corrosion hazard and must be removed. Often, a slug of corrosion inhibitor is injected and a second slightly underinflated pig is run to allow the inhibitor to coat the pipe wall.

6.7.2.3 Cleaning

Special types of scrapper pigs are run to remove paraffin, scale, rust, or construction debris from the inside of the pipe wall.

6.7.2.4 Monitoring

Special monitoring pigs are run to inspect the condition of the pipe. Feeler gauges on the pipe wall can check for wall thickness loss due to corrosion. Inclinometers and other position sensors have been placed in pigs to monitor pipe movement due to soil shifting. Increasing sophisticated pigs are being used for a widening range of pipeline monitoring tasks.

6.7.2.5 Auxiliary equipment

Much care and planning must be exercised before pigging a pipeline. Special equipment to launch and receive pigs must be provided. Line, fittings, and valves must be examined to assure passage and controlled removal of the pig from the line.

Pig velocity and travel must also be controlled through fluid pumping rates, upstream and downstream pressures, and the use of "pig sig" equipment that provides positive external signal information about internal arrival or passage.

6.7.3 Water hammer

The preceding discussion assumed that the fluid flow is steady-state. Transients have been assumed to be unimportant in the sizing of piping. One aspect of liquid flow line sizing in which transients can be extremely important involves "water hammer."

Whenever a valve in a liquid line is closed, all the liquid flowing in the pipe upstream of the closed valve must be slowed and brought to rest. Since this liquid column can be massive and is relatively incompressible, a large transient pressure at the downstream end of the pipe may be required. If the valve closure is abrupt, and the fluid initial velocity is sufficiently high, then a destructive pressure surge may result. This pressure surge travels upstream in the flow line and may exceed the burst pressure of the pipe. The familiar knocking of household plumbing resulting from rapid faucet closure is an example of this pressure pulse deforming the piping and causing it to knock or hammer against its supports. "Water hammer" is mainly found only in liquid lines due to the near incompressibility of liquid. Analysis of liquid pressure surge is a complex topic well beyond the scope of this book. Several software consulting firms maintain computer programs for the analysis of liquid surge problems.

6.7.4 Line packing

Fluid transient effects can also be important in long gas pipelines as a method of smoothing demand peaks. Since gas is much more compressible than liquid, potentially destructive liquid pressure surges do not occur as they may in liquid lines. The compressibility of gas permits the pipeline to serve as a long, slender, pressure vessel for the storage of gas. By allowing the pressure levels in a gas pipeline to fluctuate, the instantaneous gas input to a pipeline does not have to equal the instantaneous gas offtake from the pipeline. The practice of pumping the line pressure up to a high pressure during periods of low demand permits the pipeline to deliver gas quantities in excess of its steady-state capacity under conditions of high demand. The process of raising pipeline operating pressures in anticipation of greater future demand is called "line packing."

6.7.5 Line drafting

The process of drawing pipeline inventory down during periods of peak demand is called "line drafting." While pipeline pack and draft are of small importance in production operations, gas transmission companies are quite sophisticated in using pack and draft to smooth their demand curves. The capacity to "pack" a gas pipeline is related to the difference in the normal operating pressure and the MAWP.

6.7.6 Phase flow regimes

6.7.6.1 Single-phase flow

Single-phase liquid flows are characterized by a virtually constant density but may be strongly influenced by viscosity effects. Single-phase gas flows are characterized by low viscosity, which result in high Reynolds numbers. Pipe wall roughness tends to be a more important effect in determining frictional pressure drop than does viscosity. The density of gases varies greatly with both pressure and temperature and is the cause for the development of separate pressure drop-flow rate equations for two-phase flow.

In some single-phase flow conditions, a small volume of gas may be entrained in the liquid flow, such as a liquid dump line from a separator, or a small amount of liquid may be carried in the pipe in gas flow, such as the gas outlet line off a separator. These small amounts usually have a negligible effect on pressure loss and are not considered in single-phase flow calculations. However, there are certain flow conditions where sufficient volumes of a second gas or liquid phase exist to produce an appreciable effect on pressure loss. The pressure drop in such lines must be considered using techniques for two-phase flow.

6.7.6.2 Two-phase flow

When vapor and liquid flow in a pipe simultaneously, the flow situation becomes much more complicated. Liquid and vapor phases will distribute according to flow conditions, pipeline geometry, and the effect of gravity. Pressure drop-flow rate relations change as well. Using the best correlations available for pressure drop and liquid holdup, predictions may be in error by as much as $\pm 20\%$ for perfectly horizontal pipe and $\pm 50\%$ for inclined and looped systems. A phase diagram should be prepared for the flowing fluid. Plotting the anticipated flowing pressure and temperature will determine the number of phases present.

Generally, in production operations, two-phase flow exists from the wellbore to the first separator in the production facility. Gas from the separator is considered single-phase flow even though entrained liquids are present. Liquid from the separator is considered single-phase flow even though gas is present due to pressure drop through a liquid dump valve.

Different liquid and gas distributions in the pipe occur for different flow conditions.

6.8 Networks

Piping systems are composed of more than a single line of constant diameter pipe. Several pipes may be manifolded together, and even runs of a single line may change diameter. For very complicated systems, hand calculations may be prohibitively complicated, and computer programs must be used. For simple series and parallel lines, composite pressure drop-flow rate relations can be calculated using a couple of simple procedures.

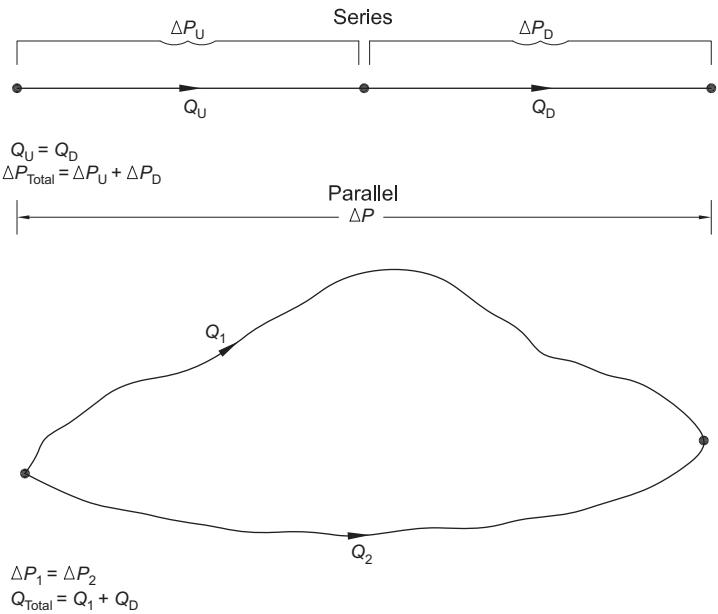

Figure 6.7 Series and parallel piping systems.

6.8.1 Pipes in series

Pressure drops are additive in pipes in series. For two sections of pipe, the downstream section having a different diameter from the upstream section, the overall pressure drop can be calculated by determining the pressure drop of the upstream and downstream sections separately. The composite pressure drop is then calculated by adding the pressure drops of the upstream and downstream sections. Note that the volume flow rate (Q) is the same in the upstream and downstream segments of pipes in a series.

6.8.2 Pipes in parallel

For two pipe segments in parallel, the pressure drops are identical for each segment and the flow rates are additive. Figure 6.7 shows the comparison between these two conditions.

6.9 Fluid head, friction losses, and Bernoulli's equation

6.9.1 Fluid head

The term "head" is used to represent the vertical height of a static column of a liquid corresponding to the mechanical energy contained in the liquid per unit mass. Head can also be considered as the amount of work necessary to move a liquid from its

original position to its final required delivery position. Accordingly, this includes the additional work necessary to overcome the resistance to flow in the line.

A liquid at any point consists of the following three kinds of head:

6.9.1.1 Pressure head

Static pressure head represents the energy contained in the liquid due to its pressure. The pressure head has dimensions of length and is calculated in units of feet or meters.

6.9.1.2 Velocity head

Velocity head represents the kinetic energy contained in the liquid due to its velocity. This head is usually very small, and while it would be technically incorrect to disregard it, for practical piping problems, its contribution is often negligible. The velocity head is particularly important when calculating friction head losses through fittings.

6.9.1.3 Elevation head

Elevation head represents the energy contained in the liquid due to its position measured by the vertical height above some plane of reference. This is the head due to potential energy and accounts for that portion of the head required to move the fluid from one elevation to another.

6.9.2 Friction losses

Although there are a number of software programs available to compute friction losses, the ability to perform hand calculations should not be underestimated. The first step is to obtain an accurate count of the length of pipe and type and number of fittings, valves, and other components. Once this information is known, the rest is accounting, and a manual calculation procedure is no more difficult than modeling the piping system in a format that can be understood by the piping software.

Friction losses depend on the following variables:

- Flow rate
- Diameter
- Type of pipe (relative roughness)
- Length of pipe (major losses)
- Number and sizes of fittings, valves, and accessories (minor losses)
- Entrance and exit losses (minor losses)

The inside diameter of the pipe is determined by fluid velocity. The velocity is usually based on recommended rules of thumb that have been used with success over the years. Refer to Chapter 7 and *API RP 14E* for suggested velocities for liquids, gases, and two-phase flow. Flow rates in GPM for common pipe sizes and practical velocities are given for various pipe schedules in Tables 6.4–6.7. These tables can be used to quickly find the diameter of pipe if the desired flow rate in GPM is known.

Table 6.4 Flow rates in GPM through Schedule 40 pipe

Nominal pipe size	Inside area (sq ft)	3 (fps)	4 (fps)	5 (fps)	6 (fps)	7 (fps)	8 (fps)	9 (fps)	10 (fps)
1/2″	0.0021	2.8	3.8	4.7	5.7	6.6	7.5	8.5	9.4
3/4″	0.0037	5.0	6.6	8.3	10.0	11.6	13.3	14.9	16.6
1″	0.0060	8.1	10.8	13.5	16.2	18.8	21.5	24.2	26.9
1½″	0.0141	19.0	25.3	31.6	38.0	44.3	50.6	56.9	63.3
2″	0.0233	31.4	41.8	52.3	62.7	73.2	83.6	94.1	104.6
2½″	0.0333	44.8	59.8	74.7	89.7	104.6	119.6	134.5	149.4
3″	0.0513	69.1	92.1	115.1	138.1	161.2	184.2	207.2	230.2
4″	0.0884	119.0	158.7	198.4	238.0	277.7	317.4	357.0	396.7
6″	0.2006	270.1	360.1	450.1	540.1	630.2	720.2	810.2	900.2
8″	0.3474	467.7	623.6	779.5	935.4	1091.3	1247.2	1403.1	1559.0
10″	0.5476	737.2	983.0	1228.7	1474.5	1720.2	1966.0	2211.7	2457.4
12″	0.7854	1057.4	1409.8	1762.3	2114.8	2467.2	2819.7	3172.1	3524.6
14″	0.9575	1289.1	1718.8	2148.5	2578.2	3007.9	3437.5	3867.2	4296.9
16″	1.2684	1707.6	2276.9	2846.1	3415.3	3984.5	4553.7	5122.9	5692.1
18″	1.6230	2185.0	2913.4	3641.7	4370.1	5098.4	5826.8	6555.1	7283.5
20″	2.0211	2721.0	3628.0	4535.0	5442.0	6349.0	7256.0	8163.0	9070.0
24″	2.9483	3969.3	5292.4	6615.5	7938.6	9261.7	10584.8	11907.9	13231.0
30″	4.6640	6279.1	8372.2	10465.2	12558.3	14651.3	16744.4	18837.4	20930.4
36″	6.7770	9123.9	12165.1	15206.4	18247.7	21289.0	24330.3	27371.6	30412.9
40″	8.4020	11311.6	15082.1	18852.7	22623.2	26393.7	30164.2	33934.8	37705.3
42″	9.2810	12495.0	16660.0	20825.0	24990.0	29155.0	33320.0	37485.0	41650.0
48″	12.1770	16393.9	21858.5	27323.1	32787.7	38252.4	43717.0	49181.6	54646.2
60″	19.1470	25777.6	34370.1	42962.6	51555.1	60147.6	68740.2	77332.7	85925.2
96″	49.4830	66618.8	88825.1	111031.4	133237.7	155444.0	177650.3	199856.5	222062.8

Table 6.5 **Flow rates in GPM through XS pipe**

Nominal pipe size	Inside area (sq ft)	3 (fps)	4 (fps)	5 (fps)	6 (fps)	7 (fps)	8 (fps)	9 (fps)	10 (fps)
1/2″	0.0016	2.2	2.9	3.6	4.3	5.0	5.7	6.5	7.2
3/4″	0.0030	4.0	5.4	6.7	8.1	9.4	10.8	12.1	13.5
1″	0.0050	6.7	9.0	11.2	13.5	15.7	18.0	20.2	22.4
1½″	0.0123	16.6	22.1	27.6	33.1	38.6	44.2	49.7	55.2
2″	0.0205	27.6	36.8	46.0	55.2	64.4	73.6	82.8	92.0
2½″	0.0294	39.6	52.8	66.0	79.2	92.4	105.5	118.7	131.9
3″	0.0459	61.8	82.4	103.0	123.6	144.2	164.8	185.4	206.0
4″	0.0798	107.4	143.2	179.1	214.9	250.7	286.5	322.3	358.1
6″	0.1810	243.7	324.9	406.1	487.4	568.6	649.8	731.0	812.3
8″	0.3171	426.9	569.2	711.5	853.8	996.1	1138.4	1280.7	1423.0
10″	0.5185	698.1	930.7	1163.4	1396.1	1628.8	1861.5	2094.2	2326.9
12″	0.7530	1013.8	1351.7	1689.6	2027.5	2365.4	2703.4	3041.3	3379.2
14″	0.9213	1240.3	1653.8	2067.2	2480.7	2894.1	3307.6	3721.0	4134.5
16″	1.2272	1652.2	2202.9	2753.6	3304.4	3855.1	4405.8	4956.5	5507.3
18″	1.5762	2122.0	2829.4	3536.7	4244.1	4951.4	5658.8	6366.1	7073.4
20″	1.9689	2650.7	3534.3	4417.9	5301.5	6185.0	7068.6	7952.2	8835.8
24″	2.8852	3884.3	5179.1	6473.9	7768.7	9063.5	10358.2	11653.0	12947.8
30″	4.5869	6175.3	8233.8	10292.2	12350.7	14409.1	16467.6	18526.0	20584.4
36″	6.6810	8994.6	11992.8	14991.0	17989.2	20987.4	23985.6	26983.8	29982.0
40″	8.2960	11168.9	14891.8	18614.8	22337.8	26060.7	29783.7	33506.7	37229.6
42″	9.1680	12342.9	16457.1	20571.4	24685.7	28800.0	32914.3	37028.6	41142.9
48″	12.0480	16220.2	21626.9	27033.7	32440.4	37847.1	43253.9	48660.6	54067.3
60″	18.9860	25560.8	34081.1	42601.3	51121.6	59641.9	68162.2	76682.4	85202.7
96″	49.2240	66270.2	88360.2	110450.3	132540.3	154630.4	176720.4	198810.5	220900.5

Table 6.6 Flow rates in GPM through XXS pipe

Nominal pipe size	Inside area (sq ft)	3 (fps)	4 (fps)	5(fps)	6 (fps)	7 (fps)	8 (fps)	9 (fps)	10 (fps)
1/2″	0.0004	0.5	0.7	0.9	1.1	1.3	1.4	1.6	1.8
3/4″	0.0010	1.3	1.8	2.2	2.7	3.1	3.6	4.0	4.5
1″	0.0020	2.7	3.6	4.5	5.4	6.3	7.2	8.1	9.0
1½″	0.0066	8.9	11.8	14.8	17.8	20.7	23.7	26.7	29.6
2″	0.0123	16.6	22.1	27.6	33.1	38.6	44.2	49.7	55.2
2½″	0.0171	23.0	30.7	38.4	46.0	53.7	61.4	69.1	76.7
3″	0.0289	38.9	51.9	64.8	77.8	90.8	103.8	116.7	129.7
4″	0.0542	73.0	97.3	121.6	145.9	170.3	194.6	218.9	243.2
6″	0.1308	176.1	234.8	293.5	352.2	410.9	469.6	528.3	587.0
8″	0.2578	347.1	462.8	578.5	694.2	809.8	925.5	1041.2	1156.9
10″	0.4176	562.2	749.6	937.0	1124.4	1311.8	1499.2	1686.6	1874.0
12″	0.6303	848.6	1131.4	1414.3	1697.1	1980.0	2262.9	2545.7	2828.6

Table 6.7 Flow rates in GPM through Schedule 160 pipe

Nominal pipe size	Inside area (sq ft)	3 (fps)	4 (fps)	5 (fps)	6 (fps)	7 (fps)	8 (fps)	9 (fps)	10 (fps)
1/2″	0.0000	0.0	0.0	0.0	0.0	0.0	0.0	0.0	0.0
3/4″	0.0020	2.7	3.6	4.5	5.4	6.3	7.2	8.1	9.0
1″	0.0036	4.8	6.5	8.1	9.7	11.3	12.9	14.5	16.2
1½″	0.0098	13.2	17.6	22.0	26.4	30.8	35.2	39.6	44.0
2″	0.0155	20.9	27.8	34.8	41.7	48.7	55.6	62.6	69.6
2½″	0.0246	33.1	44.2	55.2	66.2	77.3	88.3	99.4	110.4
3″	0.0376	50.6	67.5	84.4	101.2	118.1	135.0	151.9	168.7
4″	0.0645	86.8	115.8	144.7	173.7	202.6	231.6	260.5	289.5
6″	0.1467	197.5	263.3	329.2	395.0	460.8	526.7	592.5	658.3
8″	0.2532	340.9	454.5	568.1	681.8	795.4	909.0	1022.6	1136.3
10″	0.3941	530.6	707.4	884.3	1061.2	1238.0	1414.9	1591.7	1768.6
12″	0.5592	752.8	1003.8	1254.7	1505.7	1756.6	2007.6	2258.5	2509.5
14″	0.6827	919.1	1225.5	1531.9	1838.2	2144.6	2451.0	2757.4	3063.7
16″	0.8953	1205.3	1607.1	2008.9	2410.7	2812.5	3214.2	3616.0	4017.8
18″	1.1370	1530.7	2041.0	2551.2	3061.5	3571.7	4082.0	4592.2	5102.5
20″	1.4071	1894.4	2525.8	3157.3	3788.8	4420.2	5051.7	5683.1	6314.6
24″	2.0342	2738.6	3651.5	4564.4	5477.3	6390.2	7303.0	8215.9	9128.8

Depending on the particular application, liquid velocities should be between 3 and 15 fps (1-5 m/s). The danger of creating water hammer increases above 15 fps. Pump suctions operate in a region of low pressure, and high velocities can cause a reduction in the vapor pressure, creating local vaporization of the water. This leads to small vapor bubbles that could collapse inside the pump, and the result is an erosive condition called "cavitation," which could lead to early pump failure. Therefore, pump suction lines should always be sized for low velocities between 2 and 5 fps (0.6-1.5 m/s), thus reducing the likelihood of creating cavitation in the pump.

Roughness of the pipe is a function of the pipe material and its age. Ferrous pipes that have been in service many years may be corroded or scaled, and the relative roughness for low flow rates will have increased due to these surface irregularities. On the other hand, for low flow rates (laminar flow), it turns out that the roughness does not matter at all.

The number of fittings and other factors such as entrance and exit losses that contribute to the minor losses may be converted into an "equivalent length," which is then added to the length of straight pipe for a total length. This exercise must be performed for each segment that has a different diameter in the system.

6.9.3 Bernoulli's equation

Bernoulli's equation states that as a fluid flows from one point to another point in a piping system, the total of the static pressure, potential, and velocity heads at the upstream point (subscript 1) equals the total of the three heads at the downstream point (subscript 2) plus the frictional head loss between points 1 and 2 and is expressed as follows:

$$(H_s)_1 + (H_p)_1 + (H_v)_1 = (H_s)_2 + (H_p)_2 + (H_v)_2 + H_L \tag{6.16}$$

where

H_s = static pressure head (ft. (m)),
H_p = pressure head (ft. (m)),
H_v = velocity head (ft. (m)),
H_L = frictional head loss (ft. (m)).

When Bernoulli's equation is written for a section of pipe carrying a fluid of constant fluid properties, the resulting equation is expressed as

Field units:

$$Z_1 + \frac{144P_1}{\rho_1} + \frac{V_1^2}{2g} = Z_2 + \frac{144P_2}{\rho_2} + \frac{V_2^2}{2g} + H_L \tag{6.17a}$$

SI units:

$$Z_1 + 1000\frac{P_1}{\rho_1} + \frac{V_1^2}{2g} = Z_2 + 1000\frac{P_2}{\rho_2} + \frac{V_2^2}{2g} + H_L \tag{6.17b}$$

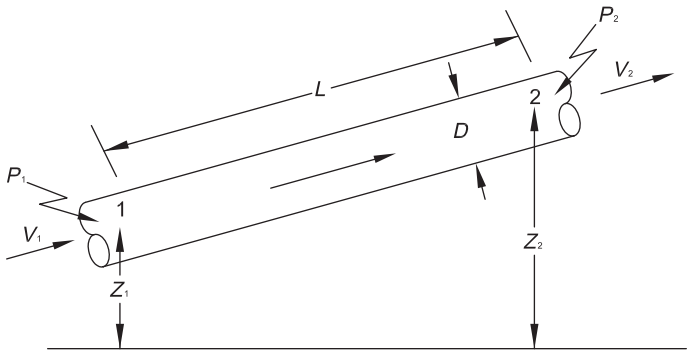

Figure 6.8 Terms used in the momentum equation.

where

V_1 = upstream fluid velocity (ft./s (m/s)),
V_2 = downstream fluid velocity (ft./s (m/s)),
P_1 = upstream pressure (psi (kPa)),
P_2 = downstream pressure (psi (kPa)),
Z_1 = upstream elevation (ft. (m)),
Z_2 = downstream elevation (ft. (m)),
H_L = frictional head loss (ft. (m)),
ρ = fluid density (lbf/ft.^{3} (kg/m^3)),
g = acceleration of gravity (32.17 ft./s^2 (9.81 m/s^2)).

Figure 6.8 illustrates the condition for which this equation is written. This equation forms the basis for pressure drop predictions using the Darcy-Weisbach equation.

Velocity, as used herein, refers to the average velocity of a fluid at a given cross section and is determined by the steady-state flow equation:

Field units:

$$V = \frac{Q}{A} = \frac{W_s}{A_p} \tag{6.18a}$$

SI units:

$$V = \frac{Q}{3600A} = \frac{W_s}{A_p} \tag{6.18b}$$

where

V = average velocity (ft./s (m/s)),
Q = rate of flow (ft.^{3}/s (m^3/s)),
A_p = cross-sectional area of the pipe (ft.^{2} (m^2)),
W_s = rate of flow (lb/s (kg/s)).

6.9.4 Pressure drop equations

A lot of attention has been given to pressure drop calculations throughout the years, and the result is that there are several good methods to compute pressure drops. Bernoulli's equation has the frictional effects included in the H_l term, and the method for calculating frictional effects is unspecified. The Darcy-Weisbach and Fanning equations provide a means of calculating these friction effects.

6.9.4.1 Darcy-Weisbach equation

The head loss due to friction is given by the Darcy-Weisbach equation as follows:

$$H_f = \frac{f_m L}{D} \frac{V^2}{2g} \tag{6.19}$$

The velocity of the fluid is understood to be the average velocity and is best described as the volumetric flow rate divided by the cross-sectional wetted area of the pipe.

6.9.4.2 Fanning equation

The head loss due to friction is given by the Fanning equation as follows:

$$H_f = \frac{4 f_f L}{D} \frac{V^2}{2g} \tag{6.20}$$

where

H_l = frictional head loss (ft. (m)),
F_m = Moody friction factor, dimensionless,
f_f = Fanning friction factor, dimensionless,
L = pipe length (ft. (m)),
D = pipe diameter (ft. (m)),
V = fluid velocity (ft./s (m/s)),
g = acceleration of gravity (32.17 ft./s (9.81 m/s^2)).

Equations 6.17 and 6.19 or 6.20 can be used to calculate the pressure at any point in a piping system if the pressure, average flow velocity, pipe inside diameter, and elevation are known at any other point. If the pressures, pipe inside diameter, and elevations are known at two points, the flow velocity can be calculated. Neglecting the head differences due to elevation and velocity changes between the two points, Equation 6.17 can be reduced to

Field units:

$$P_1 - P_2 = \Delta P = \frac{\rho}{144} H_f \tag{6.21a}$$

SI units:

$$P_1 - P_2 = \Delta P = 9.81 \times 10^{-3} \rho H_f \tag{6.21b}$$

where

ΔP = pressure drop (psi (kPa)),
H_f = pipe friction head loss (ft. (m)),
P = density of liquid (lb/ft.^{3} (kg/m^3)).

Substituting Equation 6.19 to Equation 6.21a and expressing pipe inside diameter in inches (mm),

Field units:

$$\Delta P = 0.0013\frac{f\rho LV^2}{d} \tag{6.22a}$$

SI units:

$$\Delta P = 0.5\frac{f\rho LV^2}{d} \tag{6.22b}$$

Where

d = pipe inside diameter (in. (mm)),
f = Moody friction factor, dimensionless,
ρ = density of liquid (lb/ft.^{3} (kg/m^3)),
L = length of pipe (ft. (m)),
V = average velocity (ft./s (m/s)),
ΔP = pressure drop (psi (kPa)).

6.9.4.3 Moody and fanning friction factor comparison

The Darcy-Weisbach equation can be derived by dimensional analysis, except for the friction factor (f), which must be determined experimentally. There has been a considerable amount of research in reference to pipe roughness and friction factors. The Moody friction factor is generally accepted and used in pressure drop calculations. Some texts, including API RP 14E, use the "Fanning" friction factor, which is one-fourth the value of the Moody friction factor.

Confusion between Moody and Fanning friction factors is a common source of error. In this text, the Moody friction factor will be used exclusively. Many references are not clear as to which friction factor is being used. Therefore, the reader is cautioned to always note which friction factor, Moody or Fanning, is used in the applicable equations and which friction factor diagram is used as a source when calculating pressure drops.

Comparison of the two pressure drop equations reveals that the Darcy-Weisbach and Fanning equations differ only by a factor of 4. This occurs because of the differences in friction factors:

$$F_{\text{Fanning}} = 1/4f \tag{6.23}$$

The friction factor for fluids in laminar flow is directly related to the Reynolds number (Re < 2000) and is expressed:

Field units:

$$f = \frac{64}{\mathrm{Re}} = 0.52\frac{\mu}{dV\rho} \tag{6.24a}$$

SI units:

$$f = 64\frac{\mu}{dV\rho} \tag{6.24b}$$

Where

f = Moody friction factor,
Re = the Reynolds number,
μ = absolute viscosity (cP (Pa s)),
d = pipe inside diameter (in. (mm)),
V = average velocity (ft./s (m/s)),
ρ = density of fluid (lb/ft.^{3} (kg/m^3)).

If this quantity is substituted into Equation 6.22, pressure drop in psi (kPa) for fluids in laminar flow becomes

Field units:

$$\Delta P = 0.000676\frac{\mu LV}{d^2} \tag{6.25a}$$

SI units:

$$\Delta P = 32\frac{\mu LV}{d^2} \tag{6.25b}$$

The friction factor for fluids in turbulent flow (Re > 4000) depends on the Reynolds number and the relative roughness of the pipe. Relative roughness is the ratio of the pipe absolute roughness, ε, to pipe inside diameter. Roughness is a measure of the smoothness of the pipe's inner surface. Table 6.8 shows the absolute roughness, ε,

Table 6.8 Absolute roughness "ε" for various types of new, clean pipe

Pipe roughness			
Type of pipe New, clean condition	**Absolute roughness (ε)**		
	mm	**ft.**	**in.**
Unlined concrete	0.30	0.001-0.01	0.012-0.12
Cast iron—uncoated	0.26	0.00085	0.0102
Galvanized iron	0.15	0.0005	0.006
Carbon steel	0.046	0.00015	0.0018
Fiberglass epoxy	0.0076	0.000025	0.0003
Drawn tubing	0.0015	0.000005	0.00006

for various types of new, clean pipe. For pipe that has been in service for some time, it is often recommended that the absolute roughness to be used for calculations should be up to four times as much as the values in Table 6.8.

For the Reynolds numbers less than 2000 (laminar flow):

- Characterized by little mixing of the flowing fluids and a parabolic velocity profile
- All the friction factor curves collapse onto a straight line

For the Reynolds number greater than 4000 (turbulent flow):

- Characterized by complete mixing of the flowing fluid and a more uniform velocity profile.
- Friction factor curves are widely spread and almost horizontal, indicating that the friction factor is almost totally a function of relative roughness.

For the Reynolds numbers between 2000 and 4000 (transition flow):

- Unstable region between laminar and turbulent flow.
- Friction factor is undetermined.

The friction factor, f, can be determined from the Moody diagram, Figure 6.9.

The pressure drop between any two points in a piping system can be determined from Equation 6.25 for laminar flow or Equation 6.22 for turbulent flow using the friction factor from Figure 6.9.

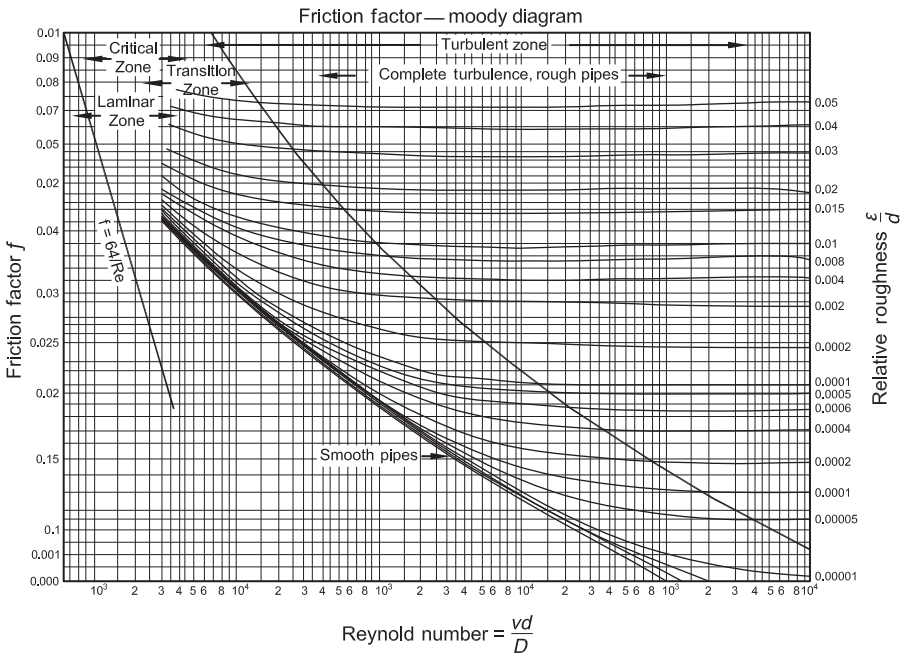

Figure 6.9 Friction factor as a function of the Reynolds number and pipe roughness. Courtesy of API.

6.9.4.4 Calculation procedure

Once the pipe inside diameter and material have been selected, the following procedure should be followed:

- Determine the relative roughness from Table 6.8.
- Calculate the Reynolds number using the design flow rate, fluid properties, and pipe diameter.
- Using the calculated Reynolds number and determined relative roughness, determine the Moody friction factor from Figure 6.9.
- This friction factor is used in the Darcy-Weisbach equation to calculate frictional head loss.
- This frictional head loss is inserted into the momentum equation to determine the overall pressure drop.

The above procedure is tedious and requires trial and error.

6.9.4.5 Effects of elevation changes

In single-phase gas or liquid flow, the pressure change between two points in a line will be affected by the relative elevations of those points, but not by intermediate elevation changes. The reason for this is because the density of the flowing fluid is nearly constant, and the pressure increase caused by any decrease in elevations is balanced by the pressure decrease caused by an identical increase in elevation.

In Figure 6.10, *Case A*, the elevation head increases by "*H*" from point 1 to point 2. Neglecting pressure loss due to friction, the pressure drop due to elevation change is given by

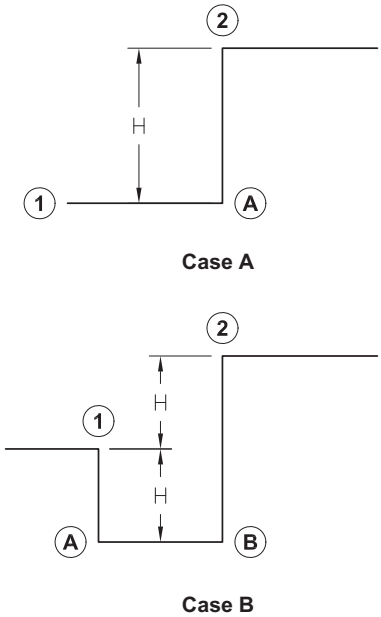

Figure 6.10 Effects of elevation changes on head.

$$P_1 - P_2 = H(\rho/144)$$

In *Case B*, the elevation head decreases by H from point 1 to point A. Neglecting pressure loss due to friction, the pressure increase from 1 to A is determined from Equation 6.17:

$$P_A - P_B = -H(\rho/144)$$

Similarly, elevation pressure changes due to other segments are

$$P_A - P_B = 0$$

$$P_A - P_B = 2H\left[\frac{\rho}{144}\right]$$

$$P_B - P_2 = 2H(\rho/144)$$

The overall pressure change in the pipe due to elevation is obtained by adding the changes for the individual segments:

$$P_1 - P_2 = P_1 - P_A + P_A + P_A - P_B + P_B - P_2$$

$$P_1 - P_2 = (0 - H + 2H)\frac{\rho}{144}$$

$$\begin{aligned} P_1 - P_2 &= H\frac{\rho}{144} \\ &= (0 - H + 0 + 2H)(\rho/144) \\ &= H(\rho/144) \end{aligned}$$

Thus, for a single-phase flow, the pressure drop due to elevation changes is determined solely by the elevation change of the end points. Equation 6.17 can be rewritten as

Field units:

$$\Delta P_z = 0.433(\mathrm{SG})\Delta Z \tag{6.26a}$$

SI units:

$$\Delta P_z = 9.79(\mathrm{SG})\Delta Z \tag{6.26b}$$

where

ΔZ_z = pressure drop due to elevation increase (psi (kPa)),
ΔZ = total increase in elevation (ft. (m)),
SG = specific gravity of liquid relative to water.

In two-phase flow, the density of the fluids in the uphill runs is higher than the density of the fluids in the downhill runs. In downhill lines, flow is stratified with liquid

flowing faster than gas. The depth of the liquid layer adjusts to the depth where the static head advantage is equal to the pressure drop due to friction, and thus, the average density of the mixture approaches that of the gas phase.

The uphill segments at low gas rates are liquid full, and the density of the mixture approaches that of the liquid phase. As a worst-case condition, it can be assumed that the downhill segments are filled with gas and the uphill segments are filled with liquid. Refer to Figure 6.10, Case A, assuming fluid flow from left to right and neglecting pressure loss due to friction:

$$P_1 - P_2 = H(\rho_1/144)$$

For Case B,

$$P_1 - P_2 = H\left(\rho_g/144\right)$$

$$P_A - P_B = 0$$

$$P_B - P_2 = 2H(\rho_1/144)$$

Thus,

$$P_1 - P_2 = (\rho_1/144)\left(2\rho_1 - \rho_g\right)$$

Since $\rho_1 \gg \rho_g$,

$$P_1 - P_2 = 2H(\rho_1/144)$$

Thus, one would expect a higher pressure drop due to elevation change for Case B than for Case A even though the net change in elevation from point 1 to point 2 is the same in both cases.

So, neglecting pressure changes due to any elevation drops, the maximum pressure drop due to elevation changes in two-phase lines can be estimated from

Field units:

$$\Delta P_z \leq 0.433(\mathrm{SG})\sum Z_e \tag{6.27a}$$

SI units:

$$\Delta P_z \leq 9.79(\mathrm{SG})\sum Z_e \tag{6.27b}$$

where

$\sum Z_e$ = sum of vertical elevation rises only (ft. (m)),
ΔP_z = pressure drop due to elevation changes (psi (kPa)),
(SG) = specific gravity of liquid relative to water.

With increasing gas flow, the total pressure drop decrease as liquid is removed from uphill segments. More accurate prediction of the pressure drop due to elevation changes requires complete two-phase flow models that are beyond the scope of this text. There are a number of proprietary computer programs available that take into account fluid property changes and liquid holdup in small line segments; they model pressure drop due to elevation changes in two-phase flow more accurately.

6.10 Pressure drop-flow rate equations

6.10.1 Liquid flow

6.10.1.1 General equation

For flowing liquids in facility piping, the density is constant throughout the pipe length. The general equation to solve for pressure drop for a given length and diameter of pipe is as follows:

Field units:

$$\Delta P = \left(1.15 \times 10^{-5}\right) \frac{fL(Q_1)^2(\mathrm{SG})}{d^5} \tag{6.28a}$$

SI units:

$$\Delta P = 6.266 \times 10^{7} \frac{fL(Q_1)^2(\mathrm{SG})}{d^5} \tag{6.28b}$$

Rearranging Equation 6.28 and solving for flow rate are as follows:

Field units:

$$Q_1 = 295 \left[\frac{\Delta P d^5}{fL(\mathrm{SG})}\right]^{\frac{1}{2}} \tag{6.29a}$$

SI units:

$$Q_1 = 1.265 \times 10^{-4} \left[\frac{\Delta P d^5}{fL(\mathrm{SG})}\right]^{\frac{1}{2}} \tag{6.29b}$$

Equations 6.28 and 6.29 are used primarily to determine a pipe diameter for a given liquid flow rate and allowable pressure drop. First, however, the Reynolds number must be calculated to determine the friction factor. Since the Reynolds number depends on the pipe diameter, Equations 6.28 and 6.29 cannot be used directly. One method to overcome this issue is to assume a typical friction factor of 0.025, solve for diameter, compute a Reynolds number, and then compare the assumed friction factor with one read from Figure 6.9. If the two are not sufficiently close, one must iterate the solution until they converge.

If the liquid is near the bubble point due to elevated temperature, the frictional pressure drop in the line may cause flashing and the evolution of vapor. This condition

results in two-phase flow and the general equation can no longer be used. For two-phase or steam flow, empirical methods for pressure drop calculations are used.

6.10.1.2 Effects of viscosity

High-viscosity liquids pose no conceptual difficulties, although accuracy may suffer. As viscosity increases, the Reynolds number decreases, and the frictional factor becomes more sensitive to changes in viscosity.

Accurate determination of viscosity is often difficult, especially for heavy liquids. Since liquid viscosities tend to increase exponentially as temperature decreases, accurate knowledge of temperature profiles is necessary. If data are important for facility design, the liquid can be analyzed in a laboratory. If not critical, data of a similar liquid can be used or Figure 6.3 can be used.

The effective viscosity of oil and water is also difficult to determine. Oil and water may or may not form an emulsion, depending on the surface tension characteristics of the oil and the presence of an emulsifying agent. Emulsifying tendencies are dependent on liquid composition. If an emulsion does not form, the water merely acts as a diluent, reducing the effective viscosity of the oil in proportion to the relative volumes of oil and water present. If an emulsion is formed, the emulsion viscosity can be 10-50 times higher than the dewatered oil viscosity.

At water cuts from 40% to 80%, highly viscous oil emulsion will form an inverse (water-external) emulsion. When this inverse emulsion occurs, the effective liquid viscosity falls from about 50 times the dewatered oil viscosity to the water viscosity. Thus, the pressure drop in a pipe is thus extremely difficult to predict. Not even laboratory measurements of viscosities of field oil-water mixtures will determine the mixture viscosity since emulsion viscosities are dependent on shear history. The shear history in the pipeline is virtually impossible to recreate in the laboratory.

6.10.1.3 Hazen-Williams equation

Using the general equation for calculating pressure drop-flow rate relations in liquid lines is troublesome and time-consuming. For approximate hand calculations used for screening studies and preliminary cost estimates, a simpler and quicker method may be used. The Hazen-Williams equation is such a method, which is expressed as

$$H_L = 0.00208\left[\frac{100}{C}\right]^{1.85}\left[\frac{\text{gpm}}{d^{2.63}}\right]^{1.85} L \tag{6.30}$$

or

$$H_L = 0.015\frac{Q_L^{1.85}L}{d^{4.87}C^{1.85}} \tag{6.31}$$

or

$$H_L = 79.309 \frac{Q_L^{1.85} L_M}{d^{4.87} C^{1.85}} \tag{6.32}$$

where

H_L = frictional head loss (ft.),
Q_L = fluid flow rate (BPD),
gpm = fluid flow rate (gpm),
L = pipeline length (ft.),
L_m = pipeline length (miles),
d = pipeline inside diameter (in.),
C = Hazen-Williams "C" factors, dimensionless,
= 140 for new steel pipe,
= 130 for new cast iron pipe,
= 100 for riveted pipe,
= 90 for old steel pipe.

The Hazen-Williams equation is based on the following assumptions:

- Fluid is water at 60 °F.
- Flow regime is turbulent.
- C and f_D are not directly related.

Once the frictional head loss is calculated using the Hazen-Williams equation, the head loss can be inserted into the momentum equation to determine pressure drop. The Hazen-Williams equation is easily inverted so that flow rate can be determined if frictional head loss is known.

In its inverted form, the Hazen-Williams equation is

$$Q_L = 0.094286 c d^2 63 \left(\frac{H_L}{L_M}\right)^{0.54} \tag{6.33}$$

where

Q_L = fluid flow rate (BPD),
D = pipeline inside diameter (in.),
H_L = frictional head loss (in.),
L_m = pipeline length (miles),
C = Hazen-Williams "C" factor, dimensionless.

Figure 6.11 is a graphic solution to the Hazen-Williams equation. The chart should be used for a "quick" check of hand calculations.

6.10.1.4 "C" factors

With all the precision and sophistication of the friction factor, the Reynolds number plot (Figure 6.9) has been collected into the single Hazen-Williams "C" factor. A tabulation of recommended "C" factors is included in Table 6.9. The spread in recommended "C" factors indicates that the Hazen-Williams equation is a fairly approximate method. The best way to use the equation is with "C" factors that have been empirically determined

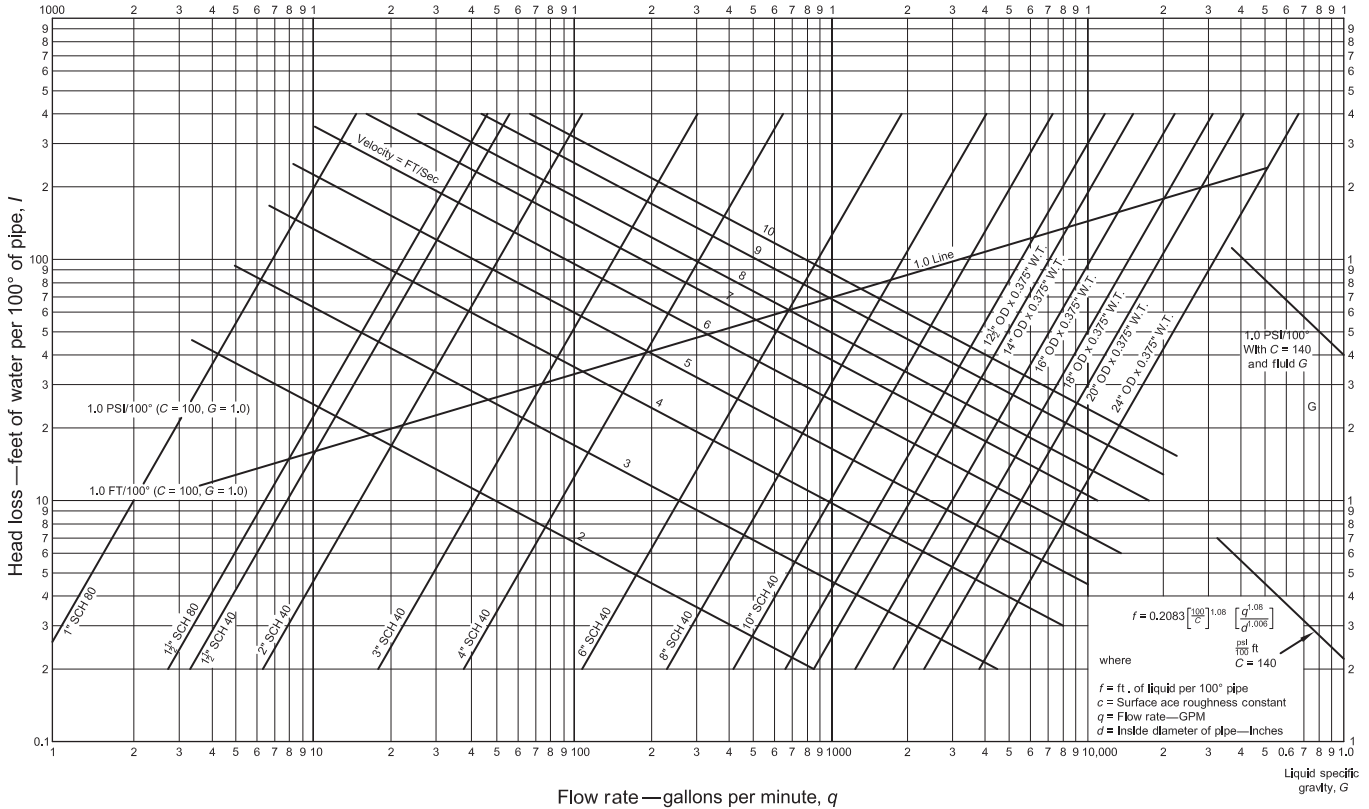

Figure 6.11 Graphic solution to the Hazen-Williams equation.

Table 6.9 Hazen-Williams "*C*" factors

Type of pipe	"*C*" values		
	Range[a]	Average[b]	Common[c]
Welded and seamless steel	150-80	140	100
Cement asbestos	160-140	150	140
Fiber	-	150	140
Cement-lined iron	-	150	140
Bitumastic-enamel-lined iron	160-130	148	140
Copper, brass, lead, tin, or glass	150-120	140	130

[a]Range, high best, smooth, well laid; low-poor or corroded.
[b]Average, value for good, clean, new pipe.
[c]Common, used value for design purposes.

by field experience in conditions similar to those under consideration. Since the effects of relative roughness are included in the "*C*" factor, field data from pipe in similar service and condition to that being calculated are desirable.

6.10.1.5 Applicability

Do not use the Hazen-Williams equation for any pressure drop-flow rate calculations having odd or unusual characteristics. Do not use the equation for viscous fluids. Recommended "*C*" factors do not take into account the effect of a low Reynolds number and are particularly inappropriate for laminar flows. Do not use the equation for pipe in poor conditions. Recommended "*C*" factors do not account for the unusually high roughness ratio of deteriorated pipe. If in doubt, use the general equation. This method is much more cumbersome but it is more versatile and more accurate.

Example 6.1a *Pressure drop determination in liquid lines (field units)*

Given:

Flow rates: condensate = 800 BPD
Water = 230 BPD

Specific gravity:

Condensate = 0.87
Water = 1.05
Viscosity = 3 cP
Length = 7000 ft.
Inlet pressure = 900 psig
Temperature = 80 °F

Determine:

- Calculate the pressure drop in a 2 and 4 in. inside diameter line using
  - general equation,
  - Hazen-Williams equation.

Solution:

(A) General equation

(1) Determine the specific gravity of the liquid:

$$\mathrm{SG} = \frac{(230)(1.05)}{1030} + \frac{(800)(0.87)}{1030} = 0.91$$

(2) Set up the Reynolds number equation:

$$\mathrm{Re} = \frac{(92.1)(0.91)(1030)}{3d} = \frac{28.775}{d}$$

(3) Set up pressure drop equation:
Assuming an absolute roughness $(\in)$ of 0.00015 ft., then

$$\Delta P = \frac{\left(1.15 \times 10^{-5}\right)(7.000)(1030)^2(0.91)f}{d^5} = \frac{77.716f}{d^5}$$

(4) Determine pressure drop for 2 and 4 in. pipe.

Term	Diameter	
	2 in.	**4 in.**
Re	1.4×10^4	7.2×10^3
ε/D	0.0009	0.00045
f (from graph)	0.029	0.034
ΔP	70 psi	2.6 psi

(B) Hazen-Williams equation

(1) Assume "C" factor = 120.

(2) Set up frictional head loss equation:

$$H_l = 0.015\frac{(1030)^{1.85}(7000)}{(120)^{1.85}d^{4.87}} = \frac{5604}{d^{4.87}}$$

(3) Set up pressure drop equation:

$$\Delta P = \frac{(0.91)(62.4)}{144}H_L = 0.39H_L$$

(4) Determine pressure drop for 2 and 4 in. pipe.

Term	Diameter	
	2 in.	4 in.
H_1	192 ft.	7 ft.
ΔP	75 psi	2.7 psi

Example 6.1b *Pressure drop determination in liquid lines (SI units)*

Given:

Flow rates: condensate = 5.30 m^3/h
Water = 1.52 m^3/h

Specific gravity:

Condensate = 0.87
Water = 1.05
Viscosity = 0.003 Pa s
Length = 2130 m
Inlet pressure = 6200 kPa
Temperature = 27 °C

Determine:
Calculate the pressure drop in a 50.8 and 101.6 mm inside diameter line using

(A) general equation (SI units),
(B) Hazen-Williams equation (field units).

Solution:

(A) General equation (SI units)
(1) Determine the specific gravity of the liquid:

$$\mathrm{SG} = \frac{(1.52)(1.05)}{6.82} + \frac{(5.30)(0.87)}{6.82} = 0.91$$

(2) Set up the Reynolds number equation:

$$\mathrm{Re} = \frac{(353.13)(0.91)(6.82)}{(0.003)d} = \frac{730{,}530}{d}$$

(3) Set up pressure drop equation:
Assuming an absolute roughness ($\in$) of 0.045 mm, then

$$\Delta P = \frac{\left(6.266 \times 10^7\right)(2130)(6.82)^2(0.91)f}{d^5} = \frac{5.649 \times 10^{12} f}{d^5}$$

(4) Determine pressure drop for 2 and 4 in. pipe.

Term	Diameter	
	50.8 mm	**101.6 mm**
Re	14.4×10^3	7.2×10^3
ε/D	0.0009	0.00045
f (Moody from graph)	0.029	0.034
ΔP	484 kPa	17.7 kPa

(B) Hazen-Williams equation (field units)

(1) Assume "C" factor = 120.

(2) Set up frictional head loss equation:

$$H_l = 0.015\frac{(1030)^{1.85}(7000)}{(120)^{1.85}d^{4.87}} = \frac{5604}{d^{4.87}}$$

Set up pressure drop equation:

$$\Delta P = \frac{(0.91)(62.4)}{144}H_L = 0.39H_L$$

(3) Determine pressure drop for 2 and 4 in. pipe.

Term	Diameter	
	2 in.	**4 in.**
H_1	192 ft.	7 ft.
ΔP	75 psi	2.7 psi

6.10.2 Gas flow

6.10.2.1 Isothermal equation

Calculation of pressure drop-flow rate relations in single-phase gas lines differs from pressure drop determination in single-phase liquid lines. This is due to the variation of gas density with pressure and temperature changes. While liquids are nearly incompressible, the density of gases varies strongly with temperature and, more importantly, with pressure. The momentum equation assumed that fluid density was constant over the pipe segment under consideration. While this assumption is valid for liquids, it is incorrect for gas pipelines, where density is a function of pressure and temperature. As gas flows through the pipe, the pressure drop due to the head loss causes it to expand

and decrease in density. At the same time, if heat is not added to the system, the gas will cool and tend to increase in density. In a control valve, where the change in pressure is nearly instantaneous, and thus no heat is added to the system, the expansion is considered adiabatic. However, in pipe flow, the pressure drop is gradual, and there is sufficient pipe surface area between the gas and the surrounding medium to add heat to the gas and thus to keep it at constant temperature. In such a case, the gas can be considered to undergo an isothermal (constant temperature) expansion.

There are occasions where the gas temperature in a pipeline is significantly different from ambient; the assumption of isothermal flow is not valid. In these situations, the momentum equation may be applied segmentally over short pipe segments, so that the gas density is effectively constant over each segment. Different gas densities are applied in each segment. This approach uses computer programs where the increased computational effort of multisegmental evaluation and multiple gas property evaluation is not a problem. For hand calculations, some closed-form integration of an essentially differential momentum equation is required. If elevation effects are ignored, isothermal flow is assumed, and a real gas behavior law is used, then the general isothermal equation for the expansion of gas can be given by

Field units:

$$(W_s)^2 = \frac{144gA^2}{v\left[\frac{fL}{D} + ln\frac{P_1}{P_2}\right]}\left[\frac{(P_1)^2 - (P_2)^2}{P_1}\right] \tag{6.34a}$$

SI units:

$$(W_s)^2 = \frac{1.322x10^9gA^2}{v\left[\frac{fL}{D} + ln\frac{P_1}{P_2}\right]}\left[\frac{(P_1)^2 - (P_2)^2}{P_1}\right] \tag{6.34b}$$

where

W_g = rate of flow (lb/s (kg/s)),
g = acceleration of gravity (32.17 ft./s^2 (9.81 m/s^2)),
A = cross-sectional area of pipe (ft.^{2} (m^2)),
v = specific volume of gas at upstream conditions (ft.^{3}/lb (m^3/kg)),
f = Moody friction factor,
l = length of pipe (ft. (m)),
D = pipe inside diameter (ft. (m)),
P_1 = upstream pressure (psia (kPa)),
P_2 = downstream pressure (psia (kPa)).

The isothermal equation is based on the following assumptions:

- No work is performed between points 1 and 2, that is, there are no compressors or expanders and no elevation changes.
- The gas is flowing under steady-state conditions, that is, there are no acceleration changes.
- The Moody friction factor, f, is constant as a function of length. There is a small change due to a change in the Reynolds number, but this may be neglected.

6.10.2.2 General equation

The general equation converts the isothermal equation into useful oil field units. For practical pipeline purposes,

$$2\log_e \frac{P_1}{P_2} \ll \frac{f_D L}{D}$$

Making this assumption and substituting into Equation 6.34, one can derive the following equation:

Field units:

$$(P_1)^2 - (P_2)^2 = 25.2\left[\frac{SQ_g^2 ZTfL}{d^5}\right] \tag{6.35a}$$

SI units:

$$(P_1)^2 - (P_2)^2 = 52{,}430\left[\frac{SQ_g^2 ZTfL}{d^5}\right] \tag{6.35b}$$

The "Z" factor is assumed to be constant, but in reality, it will change from point 1 to point 2; thus, it is chosen from an average pressure defined as follows:

$$P_{AVG} = 2/3\left[P_1 + P_2 - \frac{P_1 P_2}{P_1 + P_2}\right] \tag{6.36}$$

Rearranging Equation 6.35 and solving for gas flow rate (Q_g), we have

Field units:

$$Q_g = 0.199\left[\frac{d^5\left(p_1^2 - P_1^2\right)}{ZTfLS}\right] \tag{6.37a}$$

SI units:

$$Q_g = 4.367 \times 10^{-3}\left[\frac{d^5\left(P_1^2 - P_1^2\right)}{ZTfLS}\right] \tag{6.37b}$$

As was the case for liquid flow, in order to determine a pipe diameter for a given flow rate and pressure drop, it is first necessary to estimate the diameter and then compute a Reynolds number to determine the friction factor. Once the friction factor is known, a pipe diameter is calculated and compared against the assumed number. If the two are not sufficiently close, the process is iterated until they converge.

Derivation of Equation 6.35a:

Q_g = MMSCFD (std m^3/h)
S_g = specific gravity at std conditions
W = lb/s (kg/s)
d = in. (mm)
A = ft.^{2} (m^2)
ρ = lb/ft.^{2} (kg/m^3)

Substituting in field units,

$$Wg = (Q_g)\left(\frac{1{,}000{,}000}{(24)(3600)}\right)(0.0764)S$$

$$D = d/12$$

$$A = \frac{\pi d^2}{(4)(144)}$$

and

$$\frac{P_1\overline{V_1}}{PZ_1T_1} = \frac{P_s\overline{V_s}}{Z_sT_s}$$

At standard conditions,

$$P_s = 14.7$$

$$\overline{V} = \frac{1}{\rho_s} = \frac{1}{(0.0764)(S)}$$

$$T_s = 520\,°\mathrm{R}$$

$$Z_s = 1.0$$

Determining specific volume at upstream conditions,

$$\overline{V_1} = \left(\frac{1}{(0.0764)S}\right)\left(\frac{14.7}{P_1}\right)\left(\frac{Z_1T_1}{520}\right)$$

Since

$$2\log_e\frac{P_1}{P_2} \ll \frac{f_DL}{D}$$

then

$$Q_g = 0.199\left[\frac{d^5\left(P_1^2 - P_2^2\right)}{ZTf_DLS}\right]^{0.5} \tag{6.34a}$$

Rearranging and solving for $P_1^2 - P_2^2$, we have

$$P_1^2 - P_2^2 = 25.2\left[\frac{SQ_g^2ZTf_DL}{d^5}\right] \tag{6.32a}$$

where

P_1 = upstream pressure (psia),
P_2 = downstream pressure (psia),
S = specific gravity of gas,
Q_g = gas flow rate (MMSCFD),
Z = compressibility factor for gas, dimensionless,
T = gas flowing temperature (°R),
f_D = Darcy friction factor, dimensionless,
d = pipe inside diameter (in.).

6.10.2.3 Approximation of the general equation for small pressure drops

For small pressure drops, an approximation of the general equation can be calculated. The following equation can be derived from Equation 6.34 if one assumes

$P_1 - P_2 < 10\%$ of P_1 and
$P_1^2 - P_2^2 = 2P_1(\Delta P)$

Field units:

$$\Delta P = 12.6\left[\frac{S(Q_g)^2 ZTf_D L}{P_1 d^5}\right] \tag{6.38a}$$

SI units:

$$\Delta P = 26{,}215\left[\frac{S(Q_g)^2 ZTf_D L}{P_1 d^5}\right] \tag{6.38b}$$

Derivation of Equation 6.38a

The general equation is of the form

$$P_1^2 - P_2^2 = 25.2\left[\frac{SQ_g^2 ZTf_D L}{d^5}\right]$$

Since

$$P_1^2 - P_2^2 = (P_1 + P_2)(P_1 + P_2)$$

and

$$(P_1 - P_2) = \Delta P$$

and

$$(P_1 - P_2) \cong 2P_1$$

then

$$\Delta P = 12.6\left[\frac{S(Q_g)^2 ZTf_D L}{P_1 d^5}\right] \tag{6.38a}$$

This equation yields reasonable results when $P_1 - P_2 < 10\%$ of P_1.

6.10.2.4 Oliphant equation

The Oliphant equation was derived for use in gas distribution mains prevalent in the early 1900s. Use is restricted to pipes from vacuum to 35 psig. It is most reliable for gases with specific gravities around 0.75. The Oliphant equation is of the form

$$Q = 1008\left[D^{5/2} + \frac{D^3}{30}\right]\left(\frac{14.4}{P_0}\right)\left(\frac{T_0}{520}\right)\left[\frac{(0.6)(520)}{ST}\left(\frac{P_1^2 - P_2^2}{L}\right)^{0.5}\right] \tag{6.39}$$

where

Q = volumetric gas flow rate (ft.^{3}/D pressure base),
T_0 = temperature base (°R),
P_0 = pressure base (psia),
D = pipe inside diameter (in.),
S = gas gravity (air = 1.0),
T = gas flowing temperature (°R),
L = pipeline length (miles),
P_1 = pipeline inlet pressure (psia),
P_2 = pipeline discharge pressure (psia).

Figure 6.12 is a graphic solution to the Oliphant equation. The chart should be used for quick approximate equation application and for checking hand calculations.

6.10.2.5 Empirical gas flow equations

Due to the tedious nature of solving the general gas equation, a number of empirical equations were developed. The Weymouth, Panhandle "A," and Panhandle "B" were developed to simulate compressible gas flow in pipelines. The Weymouth is the oldest and most common of the three. It was developed in 1912. The Panhandle "A" was developed in the 1940s and the Panhandle "B" in 1956 (GPSA 1998). The equations were developed from the fundamental energy equation for compressible flow, but each has a special representation of the friction factor to allow the equations to be solved analytically. The Weymouth equation is the most common of the three—probably because it has been around the longest. The equations were developed for turbulent flow in long pipelines. For low flows, low pressures, or short pipes, they may not be applicable.

If the pressure drop in a pipeline is less than 40% of P_1, then the Darcy-Weisbach incompressible flow equation may be more accurate than the Weymouth or Panhandles for short pipe or low flow. The Darcy-Weisbach incompressible method is valid for any

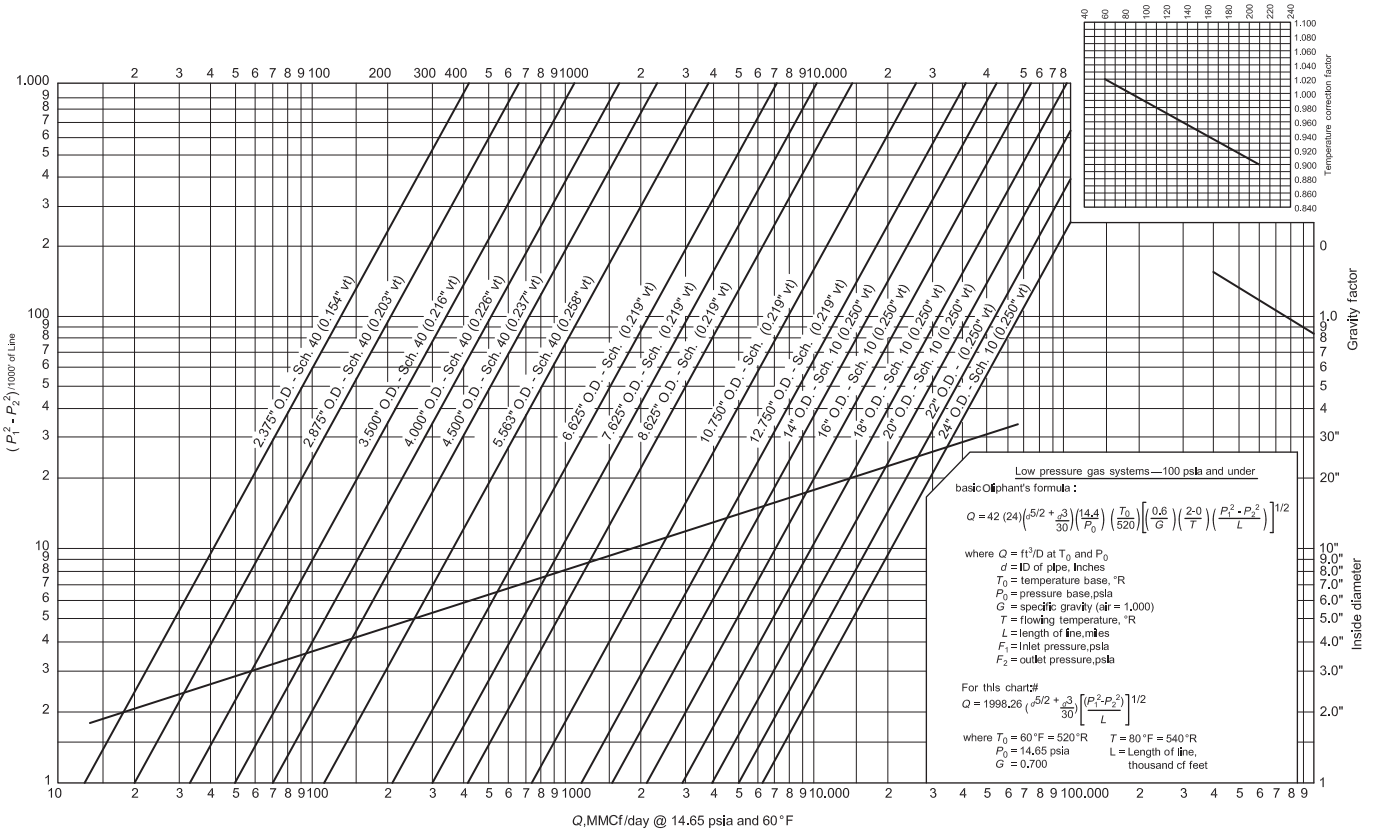

Figure 6.12 Graphic solution to the Oliphant equation.

flow rate, diameter, and pipe length, but does not account for gas compressibility. Crane (1988) stated that if the pressure drop is less than 10% of P_1 and one uses an incompressible flow model, then the gas density should be based on either the upstream or downstream conditions. If the pressure exceeds 40% of P_1, then use a compressible model, like the Weymouth or Panhandle B.

Even though each of the gas flow equations is different due to the refinement of the basic gas equation due to different sets of experimental data, they are similar. Each equation calculates line capacity when inlet and outlet pressures are given. The volumetric flow rates calculated by each of the empirical equations are at some standard condition or pressure and temperature. Most of the equations contain an empirical correction factor know as an efficiency factor that permits adjustment of the calculated results with actual field data.

6.10.2.6 Weymouth equation

The Weymouth equation is based on measurements of compressed air flowing in pipes having diameters ranging from 0.8 to 11.8 in. (20-200 mm), in the range of the Moody diagram where the relative roughness, ε/d, curves are horizontal, that is, high Reynolds number. In this range, the Moody friction factor is independent of the Reynolds number and dependent only upon the relative roughness. For a given absolute roughness, ε, the friction factor is a function of diameter only. Thus, the equation is most accurate for small-diameter, less than 12 in., short lengths of pipe where high pressure drops are likely, that is, turbulent flow. For larger pipe, the Weymouth equation becomes increasingly conservative, that is, predicted flow capacities become increasingly less compared with actual flow capacities.

The Weymouth equation is based on the following assumptions:

- Turbulent flow.
- High Reynolds number exists.
- Friction factor is dependent upon relative roughness, "ε/D."

For steel pipe with a fixed absolute roughness, "ε," the friction factor was assumed as

Field units:

$$f = \frac{0.032}{d^{\frac{1}{3}}} \tag{6.40a}$$

SI units:

$$f = \frac{0.0941}{d^{\frac{1}{3}}} \tag{6.40b}$$

Substituting the above friction factor, Equation 6.40, into the general equation, Equation 6.37, for a gas yields the Weymouth equation as shown below:

Field units:

$$Q_g = 1.11 d^{2.67} \left[\frac{P_1^2 - P_2^2}{LSZT}\right]^{\frac{1}{2}} \tag{6.41a}$$

SI units:

$$Q_g = 1.42 \times 10^{-2} d^{2.67} \left[\frac{P_1^2 - P_2^2}{LSZT} \right]^{\frac{1}{2}} \tag{6.41b}$$

where

Q_g = volumetric flow rate (MMSCFD (std m^3/h)),
D = pipeline inside diameter (in. (mm)),
P_1 = pipeline inlet pressure (psia (kPa)),
P_2 = pipeline outlet pressure (psia (kPa)),
L = pipeline length (ft. (m)),
S = gas specific gravity (air = 1),
T_1 = gas flowing temperature (°R (°K)),
Z = compressibility factor of gas, dimensionless.

Assuming a temperature of 520 °R (°K), a gas compressibility factor of 1.0, and a specific gravity of 0.6, the Weymouth equation can also be written in the form of GPSA Engineering Data Book:

Field units:

$$Q = 433.5 \left[\frac{T_b}{P_b} \right] E \left[\frac{P_1^2 - P_1^2}{SL_m T_{avg} Z_{avg}} \right]^{0.5} d^{2.667} \tag{6.42a}$$

SI units:

$$Q = 3.415 \times 10^{-5} \left[\frac{T_b}{P_b} \right] E \left[\frac{P_1^2 - P_1^2}{SL_m T_{avg} Z_{avg}} \right]^{0.5} d^{2.667} \tag{6.42b}$$

where

T_b = base absolute temperature (K (°R)),
P_b = base absolute pressure (kPa (psia)),
E = pipeline efficiency factor,
T_{avg} = average absolute temperature (K (°R)),
Z_{avg} = average compressibility,
S = specific gravity,
D = pipeline ID (mm (in.)),
Q_g^1 = volumetric flow rate (SCFD (std m^3/h)),
L_m = pipeline length (miles (m)).

It is important to know what the Weymouth equation is based on and when it is appropriate to use. To reiterate, short lengths of pipe with high pressure drops are likely to be in turbulent flow, and thus, the assumptions made by Weymouth are appropriate. Experience indicates that Weymouth's equation is suitable for most gas piping within the facility. However, the friction factor used by Weymouth is generally too low for large-diameter or low-velocity lines, where the flow regime is more properly characterized by the sloped portion of the Moody diagram.

Figure 6.13 is a graphic solution to the Weymouth equation. The chart should be used primarily for a "quick look" approximate estimate and for checking hand calculations. The accuracy of the Weymouth chart can be improved somewhat by using the gas gravity and temperature correction scales shown on the chart. The actual gas flow rate is corrected to the nominal gas flow rate by dividing the actual gas flow rate by the gas correction factor. The use of these correction factors is generally not worth the effort and largely nullifies the convenience advantage of the charts over the Weymouth equation. If accuracy is required, the Weymouth equation, rather than the charts, should be used.

Example 6.2 *Application of the Weymouth equation (field units)*

Given:

CQ = 100 MMSCFD
P_1 = 1214.7 psia
P_2 = 1014.7 psia
S = 0.621
T = 70° or 530 °R
L = 15 miles
= 79,200 ft.
Z = 0.863

Determine:

Use the Weymouth equation to determine the diameter of the pipe.

Solution:

$$d^{-2.67} = 1.1\left(\frac{1}{Q_g}\right)\left[\frac{P_1^2 - P_2^2}{LSZT_1}\right]^{0.5}$$
$$= 1.1\left(\frac{1}{Q}\right)\left[\frac{(1214.7)^2 - (1014.7)^2}{(79,200)(0.621)(0.863)(530)}\right]^{0.5}$$
$$= 11.26\text{in.}$$

Select a 12 in. nominal size standard weight or XS weight may be chosen to meet pressure and corrosion requirements.

Example 6.3 *Application of Weymouth graph (field units)*

Given:

Q = 100 MMSCFD
P_1 = 1214.7 psia
P_2 = 1014.7 psia
S = 0.621
T = 70° or 530°R
L = 15 miles
= 79,200 ft.
Z = 0.863

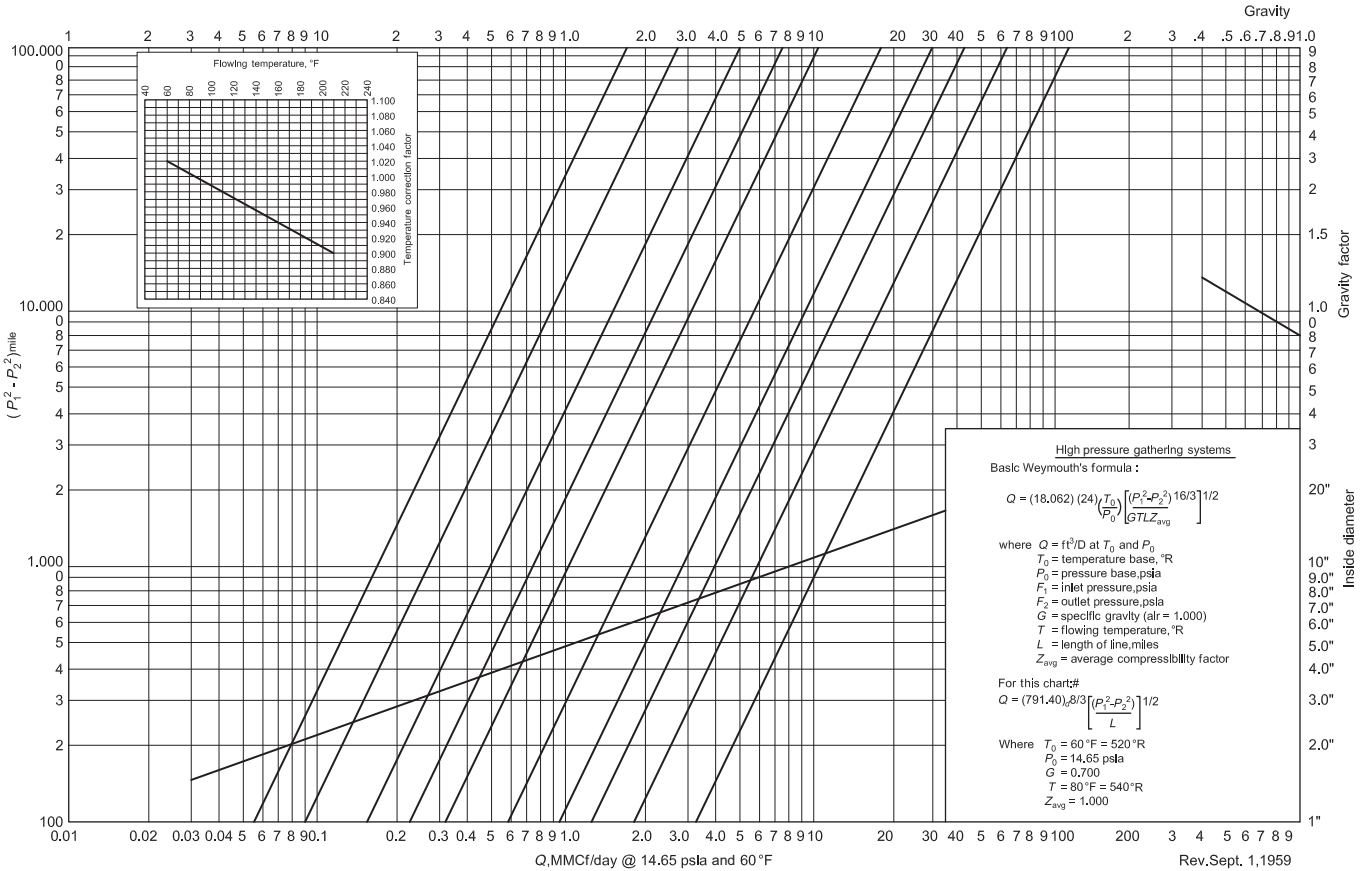

Figure 6.13 Graphic solution to the Weymouth equation.

Determine:

Determine the line size required for the high-pressure gathering system pipeline using the Weymouth graph (Figure 6.13).

Solution:

(1) Calculate the value for the ordinate:

$$= \frac{P_1^2 - P_2^2}{L}$$
$$= \frac{(1214.7)^2 - (1014.7)^2}{15}$$
$$= 29,725.3$$

(2) Draw a horizontal line intersecting 29,725.3 (Figure 6.13).
(3) Draw a vertical line from 100 MMSCFD to intersect the horizontal line in step 2 above.
(4) The intersection of the lines lies outside the pipe diameter lines. Draw a line (dotted) connecting the intersection parallel to the 10.75 *OD* line to the *ID* line.
(5) From the intersection, draw a horizontal line and read the value. $ID = 12.0$ in.

6.10.2.7 Panhandle equation

Two gas flow equations were developed by Panhandle Eastern for calculating flow rates in long, larger diameter (12 in. and above) cross-country gas transmission pipelines. Today, only the Panhandle "B" equation is used. To help the reader understand the basis of the Panhandle "B" equation, the discussion below reviews the basis of the original Panhandle "A" equation.

6.10.2.7.1 Panhandle "A" equation

The first equation is frequently called the "Panhandle A" equation. It is expressed as

Field units:

$$Q = 436E\left(\frac{T_0}{P_0}\right)^{1.07881} d^{2.6182}\left(\frac{P_1^2 - P_2^2}{5^{0.8539}TL}\right)^{0.5394} \tag{6.43}$$

where

Q = volumetric gas flow rate (ft.^{3}/d at P_0 and T_0),
E = pipeline efficiency, dimensionless,
T_0 = temperature base (°R),
P_0 = pressure base (psia),
d = pipeline inside diameter (in.),
P_1 = inlet pressure (psia),
P_2 = discharge pressure (psia),
S = gas gravity (air = 1),
T = gas flowing temperature (°R),
L = pipeline length (miles).

Table 6.10 Experience factor "*F*" for use in the Panhandle "A" equation

OD (in.)	ID (in.)	*F*
375	2.067	0.900
2.875	2.469	0.900
3.500	3.048	0.900
4.500	4.026	0.900
6.625	6.125	0.900
8.625	8.125	0.900
10.750	10.250	0.900
12.750	12.250	0.900
14.000	13.376	0.900
16.000	15.376	0.917
18.000	17.512	0.937
20.000	19.512	0.951
22.000	19.512	0.951
24.000	23.250	0.989
26.000	25.250	1.000
30.000	29.188	1.031
36.000	35.188	1.054
42.000	40.876	1.070

Panhandle Eastern originally recommended an efficiency factor of 0.92. Subsequent field experience indicated that the efficiency factor should be calculated according to the equation

$$E = 0.92F \tag{6.44}$$

where

F = experience factor given in Table 6.10.

The experience factor is included to account for the fact that the equation has an implicit Reynolds number dependence, yields errors in smaller pipe sizes, and lacks explicit inclusion of compressibility factor effects.

Figure 6.14 is a graphic solution to the Panhandle "A" equation. This chart should be used primarily for a "quick look" approximate estimate and for checking hand calculations.

Example 6.4 *Application of the "Panhandle A" chart (field units)*

Given:

Given the data in Example 6.3.

Determine:

Calculate the required line size for the high-pressure gas line using the "Panhandle A" graph.

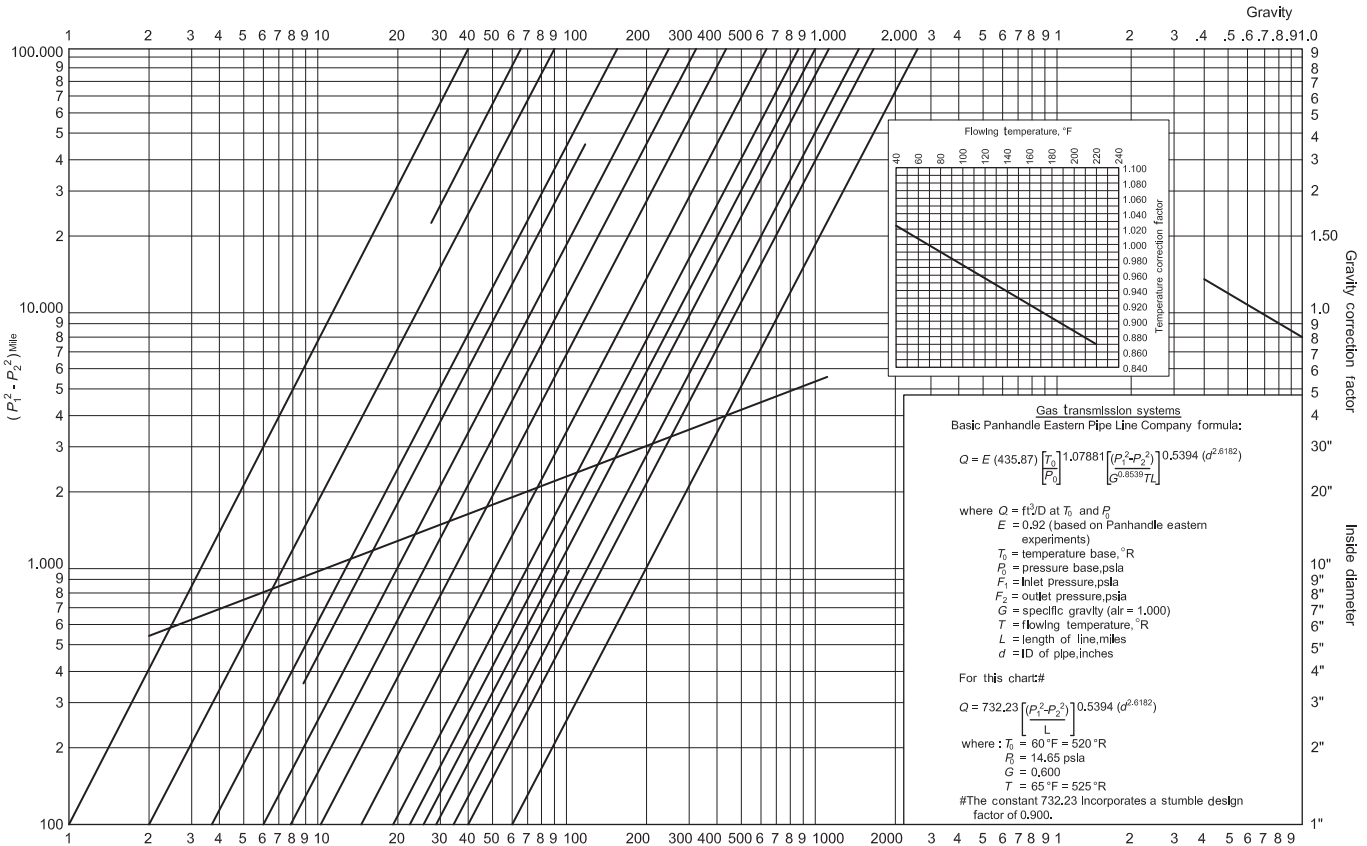

Figure 6.14 Graphic solution to the Panhandle "A" equation.

Solution:

(1) From Example 6.3:

$$\frac{p_1^2 - p_2^2}{L} = 29,725.3$$

and

$$Q = 100\,\text{MMSCFD}$$

(2) Use the same procedure outlined in Example 6.3. Refer to Figure 6.14.

$$ID = 11.0\,\text{in.}$$

The internal pipe diameter of 11 in. is in reasonable agreement with the Weymouth equation and the graphic solution. Temperature correction and gas gravity correction factors are included in the Panhandle "A" graph. As with the Weymouth graph, if detailed accuracy is required, then the Panhandle "B" equation should be used.

6.10.2.7.2 Panhandle "B" equation

Panhandle Eastern subsequently issued a revised version of the Panhandle "A" equation; it too is best used for long, larger diameter (greater than 12 in.) cross-country gas pipelines. This equation has revised exponents and includes the gas compressibility factor. It assumes that the friction factor can be represented by a straight line of constant negative slope ($f_m = C/\text{Re}^n$) in the moderate Reynolds number region of the Moody friction factor diagram.

A straight line of the Moody diagram would be expressed as

$$\log F = n \log \text{Re} + \log N \tag{6.45}$$

or

$$f = [N/\text{Re}^n] \tag{6.46}$$

Using this assumption and assuming a constant viscosity for the gas, Equation 6.37 can be rewritten as the Panhandle "B" equation:

Field units:

$$Q_g = 0.028 E_f \left[\frac{P_1^2 - P_1^2}{S^{0.961} Z T L_m}\right]^{0.51} d^{2.53} \tag{6.47a}$$

SI units:

$$Q_g = 1.229 \times 10^{-3} E_f \left[\frac{P_1^2 - P_1^2}{S^{0.961} Z T L_m}\right]^{0.51} d^{2.53} \tag{6.47b}$$

where

E_f = efficiency factor, dimensionless,
=1.0 for brand new pipe,
=0.95 for good operating conditions,
=0.92 for average operating conditions,
=0.85 for unfavorable operating conditions.

In practice, the Panhandle "B" equation is commonly used for large-diameter long cross-country gas pipelines where the Reynolds number is on the straight-line portion of the Moody diagram. Neither the Weymouth nor the Panhandle "B" equation represents a "conservative" assumption that can always be used to overstate pressure drop. If the Weymouth equation is used and the flow is in the moderate Reynolds number range, the friction factor will in reality be higher than assumed (because the sloped line portion is higher than the horizontal portion of the Moody diagram), and the actual pressure drop will be higher than calculated. If the Panhandle "B" equation is used and the flow is actually in a high Reynolds number regime, the friction factor also will be higher than assumed (because the equation assumes the friction factor continues to decline with increased Reynolds number beyond the horizontal portion of the curve), and the actual pressure drop will again be higher than calculated.

Derivation of Equation 6.47 in oil field units:

Previously,

$$\mathrm{Re} = 20,100\frac{Q_g S}{d\mu}$$

Assuming

$$f = \frac{C}{\mathrm{Re}^n}$$

and if

$$C^1 = C\left(\frac{\mu}{20,100}\right)$$

substituting

$$f = C^{/}\left[\frac{d}{Q_g S}\right]^n$$

Assuming $n = 0.039$,

$C^{/} = 0.008$.

Expressing in "oil field" units,

$$P_1 - P_2 = 25.2\left[\frac{sQ_g^2 TZfL}{d^5}\right]$$

and

$$L_m = \text{Length, miles}$$

$$L = 5280 L_m$$

Then, the Panhandle "B" is of the form

$$Q_g = 0.028E\left[\frac{P_1^2 - P_2^2}{S^{0.961}ZTL_m}\right]^{0.51} d^{2.53} \tag{6.49a}$$

where

Q_g = volumetric flow rate,(MMSCFD),
d = pipeline inside diameter (in.),
P_1 = pipeline inlet pressure (psia),
P_2 = pipeline outlet pressure (psia),
L_m = pipeline length (miles),
S = gas specific gravity (air = 1),
T = gas flowing temperature (°R),
Z = compressibility factor of gas, dimensionless,
E = efficiency factor,
= 1.0 for brand new pipe,
= 0.95 for good operating conditions,
= 0.92 for average operating conditions,
= 0.85 for unfavorable operating conditions.

Example 6.5 *Application of the Panhandle "B" equation (field units)*

Given:

Data from Examples 6.3 and 6.4

Determine:

Since the pipe diameter calculated in Examples 6.3 and 6.4 using the Weymouth equation approaches the upper limit of the equation, it is desirable to check the diameter with the "Panhandle B" equation. Assume that the efficiency factor $E = 0.90$.

Solution:

(1) From Example 6.3
$P_1 = 1214.7$ psia
$P_2 = 1014.7$ psia
$T = 530$ °R
$Z = 0.863$
$S = 0.621$
$L = 15$ miles
$Q_g = 100$ MMSCFD

(2) Solving for diameter, the Panhandle "B" equation becomes

$$d^{-2.53} = 0.028E\left[\frac{1}{Q_g}\right]\left[\frac{P_1^2 - P_2^2}{ZS^{0.961}TL}\right]^{0.51}$$
$$= 0.028(0.9)\left[\frac{1}{100}\right]\left[\frac{(1214.7)^2 - (1014.7)^2}{(0.863)(0.621)^{0.961}(530)(15)}\right]^{0.51}$$
$$= 10.40\text{in.}$$

For a pipe diameter at the upper limit of the Weymouth equation and at the lower limit of the Panhandle "B" equation, the Panhandle "B" gives somewhat smaller pipe size. As with the Weymouth equation, the Panhandle "B" equation should be checked using the Panhandle graph (Figure 6.14). The graph given is based on the Panhandle "A" chart, rather than the "Panhandle B"; nevertheless, the graph should be useful for screening purposes.

Example 6.6a *Pressure drop determination in gas lines (field units)*

Given:

$Q_g = 23$ MMSCFD
$S = 0.85$
$L = 7000$ ft.
$P_1 = 900$ psig
$T = 80$ °F
$Z = 0.67$
$\mu_g = 0.013$ cP

Determine:
Calculate the pressure drop in a 4 and 6 in. line using

(A) general equation,
(B) approximation of general equation for small pressure drops,

$$(\Delta P < (10\%)P_1)$$

(C) the Panhandle "B" equation,
(D) the Weymouth equation.

Assume an absolute roughness $\epsilon = 0.00015$ ft.

Solution:

(A) General equation
(1) Set up the Reynolds number equation:

$$\text{Re} = \frac{(20,100)(23)(0.85)}{(0.013)d}$$
$$= \frac{30,227,000}{d}$$

(2) Set up general equation:

$$P_1^2 - P_2^2 = 25.2\left[\frac{(0.85)(23)^2(0.67)(540)(7000)}{d^5}\right]f$$

Term	Diameter	
	4 in.	6 in.
Re	7.6×10^6	5×10^6
ε/D	0.00045	0.0003
f (Darcy)	0.0164	0.015
$P_1^2 - P_2^2$	459,605.9	55,362.6
P_2	614 psia	883 psi
ΔP	301 psi	32 psi

(B) Approximate equation

(1) Set up approximate equation:

$$\Delta P = \frac{(12.6)(0.85)(540)(0.67)(7000)f}{d^5(915)}$$

Term	Diameter	
	4 in.	6 in.
ΔP	251 psi	30 psi

(C) The Panhandle "B" equation

(1) Convert feet to miles:

$$L_m = \frac{7000}{5280} = 1.33 \text{ miles}$$

(2) Set up the Panhandle "B" equation. Assume an efficiency of $E = 0.95$:

$$23 = (0.0028)(0.95)\left[\frac{(915)^2 - P_2^2}{(0.85)^{0.961}(0.67)(540)(1.33)}\right]^{0.51} d^{2.53}$$

Rearranging and reducing terms,

$$\frac{8.37 \times 10^5 - P_2^2}{412} = \left[\frac{23}{(0.028)(0.95)}\right]^{1.96} \frac{1}{d^{4.96}}$$

Term	Diameter	
	4 in.	6 in.
P_2	771 psia	897 psia
ΔP	144 psi	18 psi

(D) The Weymouth equation

(1) Set up the Weymouth equation:

$$23 = 1.11d^{2.67}\left[\frac{(915)^2 - P_2^2}{(7000)(0.85)(0.67)(540)}\right]$$

Reducing terms and rearranging,

$$P_2^2 = \left[(915)^2 - \frac{(23)^2(7000)(0.85)(0.67)(540)}{1.23d^{5.34}}\right]$$

$$P_2 = \left[(915)^2 - \frac{9.26 \times 10^8}{d^{5.34}}\right]^{0.5}$$

Term	Diameter	
	4 in.	6 in.
P_2	522 psia	879 psia
ΔP	393 psi	36 psi

Example 6.6b *Pressure drop determination in gas lines (SI units)*

Given:

Flow rate: gas = 27,100 std m^3/h
Specific gravity: gas = 0.85
Length = 2130 m
Inlet pressure = 900 psig
Temperature = 27 °C
Z = 0.67
$\mu_g = 1.3 \times 10^{-5}$ Pa s

Determine:
Calculate the pressure drop in a 4 and 6 in. line using

(A) general equation,
(B) approximation of general equation for small pressure drops,

$$(\Delta P < (10\%)P_1)$$

(C) the Panhandle "B" equation,
(D) the Weymouth equation.

Assume an absolute roughness $\epsilon = 0.045$ mm.

Solution:

(A) General equation:

(1) Set up the Reynolds number equation:

$$\mathrm{Re} = \frac{(0.428)(27,100)(0.85)}{(0.000013)d} = \frac{760,000,000}{d}$$

(2) Set up general equation:

$$P_1^2 - P_2^2 = 52,430\left[\frac{(0.85)(27,100)^2(0.67)(300)(2130)}{d^5}\right]f$$

Term	Diameter	
	101.6 mm	**152.4 mm**
Re	7.6×10^6	5×10^6
ε/D	0.00045	0.0003
f (Moody diagram)	0.0164	0.015
$P_1^2 - P_2^2$	2.121×10^7	2.554×10^6
P_2	4303 kPa (abs)	6097 kPa (abs)
ΔP	2000 kPa	206 kPa

(B) Approximation of general equation for small pressure drops:
(1) Set up approximate equation:

$$\Delta P = \frac{(26,215)(0.85)(27,100)^2(300)(0.67)(2130)f}{d^5(6303)}$$

Term	Diameter	
	101.6 mm	**152.4 mm**
ΔP	251 psi	30 psi

(C) The Panhandle "B" equation:
(1) Convert feet to miles:

$$L_k = \frac{2130}{1000} = 2.13\,\mathrm{km}$$

(2) Set up the Panhandle "B" equation. Assume an efficiency of $E = 0.95$:

$$27,100 = \left(1.23 \times 10^{-3}\right)(0.95)\left[\frac{(6303)^2 - P_2^2}{(0.85)^{0.961}(0.67)(300)(2.13)}\right]^{0.51} d^{2.53}$$

Rearranging and reducing terms,

Term	Diameter	
	101.6 mm	152.4 mm
P_2	5334 kPa	6182 kPa (abs)
ΔP	969 kPa	121 kPa

$$P_2{}^2 = 3.973 \times 10^7 - \left[\left(1.015 \times 10^{17}\right)/d^{4.96}\right]$$

(D) The Weymouth equation:

(1) Set up the Weymouth equation:

$$Q_g = 1.42 \times 10^{-2} d^{2.67} \left[\frac{(P_1)^2 - P_2^2}{(L)(S)(Z)(T)}\right]$$

Reducing terms and rearranging,

$$P_2^2 = \left[(6303)^2 - \frac{(27,100)^2(2130)(0.85)(0.67)(300)}{\left(1.42 \times 10^{-2}\right)^2 d^{5.34}}\right]$$

$$P_2 = \left[(6303)^2 - \frac{1.325 \times 10^{18}}{d^{5.34}}\right]^{0.5}$$

Term	Diameter	
	101.6 mm	152.4 mm
P_2	3780 kPa (abs)	6067 kPa (abs)
ΔP	2523 kPa	236 kPa

6.10.2.8 Spitzglass equation

The Spitzglass equation is a modification of general equation that was developed for near atmospheric pressure lines. It is derived directly from Equation 6.37 and by making the following assumptions:

$$f = \left(1 + \frac{3.6}{d} + 0.03d\right)\left(\frac{1}{100}\right)$$

$T = 520$ °R
$P_1 = 15$ psi
$Z = 1.0$ for ideal gas
$\Delta P < 10\%\ P_1$

With the above assumptions, and expressing pressure drop in terms of inches of water, the Spitzglass equation can be rewritten:

Field units:

$$Q_g = 0.09\left[\frac{\Delta h_w d^5}{SL\left(1+\frac{3.6}{d}+0.03d\right)}\right] \tag{6.48a}$$

SI units:

$$Q_g = 3.655\times 10^{-2}\left[\frac{\Delta h_w d^5}{SL\left(1+\frac{3.6}{d}+0.03d\right)}\right] \tag{6.48b}$$

where

Q_g = gas flow rate (MMSCFD (std m^3/h)),
Δh_w = pressure loss (in of water (mm of water)),
d = pipe inside diameter (in. (mm)),
L = length of pipe (ft. (m)),
S = specific gravity of gas relative to air.

6.10.2.9 AGA equation

The AGA equation is the most contemporary and most accurate of the gas equations in use. It contains several features lacking in the earlier gas equations, specifically the following:

- Contains an explicit inclusion of the gas compressibility factor (Z) effects with the "Z" factor being evaluated at effective average pressure in the line segment.
- Includes an elevation correction factor lacking in the original versions of the other equations.
- Includes a transmission factor (F) that is related to the Fanning friction factor (F_f). This factor depends on pipe relative roughness, and, for sufficiently low Reynolds number, it includes a Reynolds number effect.

Like the other equations, it assumes isothermal flow. The AGA equation is expressed as

$$Q = 38.77F\left(\frac{T_0}{P_0}\right)d^{2.5}\left[\frac{P_1^2-P_2^2-E_c}{STZ_aL_m}\right] \tag{6.49}$$

where

Q = volumetric flow rate (ft.^{3}/d at T_0 and P_0),
F = transmission factor,
T_0 = temperature base (°R),
P_0 = pressure base (psia),

d = pipeline inside diameter (in.),
P_1 = inlet pressure (psia),
P_2 = discharge pressure (psia),
E_c = elevation correction factor,
S = gas gravity (air = 1),
T = gas temperature (°R),
Z_8 = compressibility factor (evaluated at T and P_a),
L_m = pipeline length (miles).

Elevation correction factor (E) is expressed by

$$E_c = \frac{(0.0375)S(h_2 - h_1)P_a^2}{Z_a T} \tag{6.50}$$

where

H_1 = elevation of pipeline inlet (ft.),
H_2 = elevation of pipeline outlet (ft.).

The compressibility factor is at average conditions (Z_a) and is determined from average pressure (P_a) and fluid flowing temperature (T). The average pressure (P_a) is determined from the following equation:

$$P_a = 2/3\left[\frac{P_1^3 - P_2^3}{P_1^2 - P_2^2}\right] \tag{6.51}$$

Transmission factor (F) for high Reynolds numbers is determined from the following equation:

$$F = \frac{1}{\sqrt{f_f}} = 4.0\log_{10}(3.7d/\varepsilon) \tag{6.52}$$

where

d/ε = either relative roughness determined from Figure 6.15 or tabulated pipe roughness given in Table 6.11.

For a flow Reynolds number less than a critical Reynolds number, the transmission factor is calculated according to the following equation:

$$F = \frac{1}{\sqrt{f_f}} = 4.0\log_{10}\left(\mathrm{Re}\sqrt{f_f}\right) - 0.6 \tag{6.53}$$

This equation is implicit in f_f and must be solved iteratively. To simplify the above calculation, a table of transmission factors is shown in Figure 6.16. The flow Reynolds number is calculated according to the following equation:

$$\mathrm{Re} = 477.5 \times 10^{-6}\left[\frac{QSP_0}{\mu d T_0}\right] \tag{6.54}$$

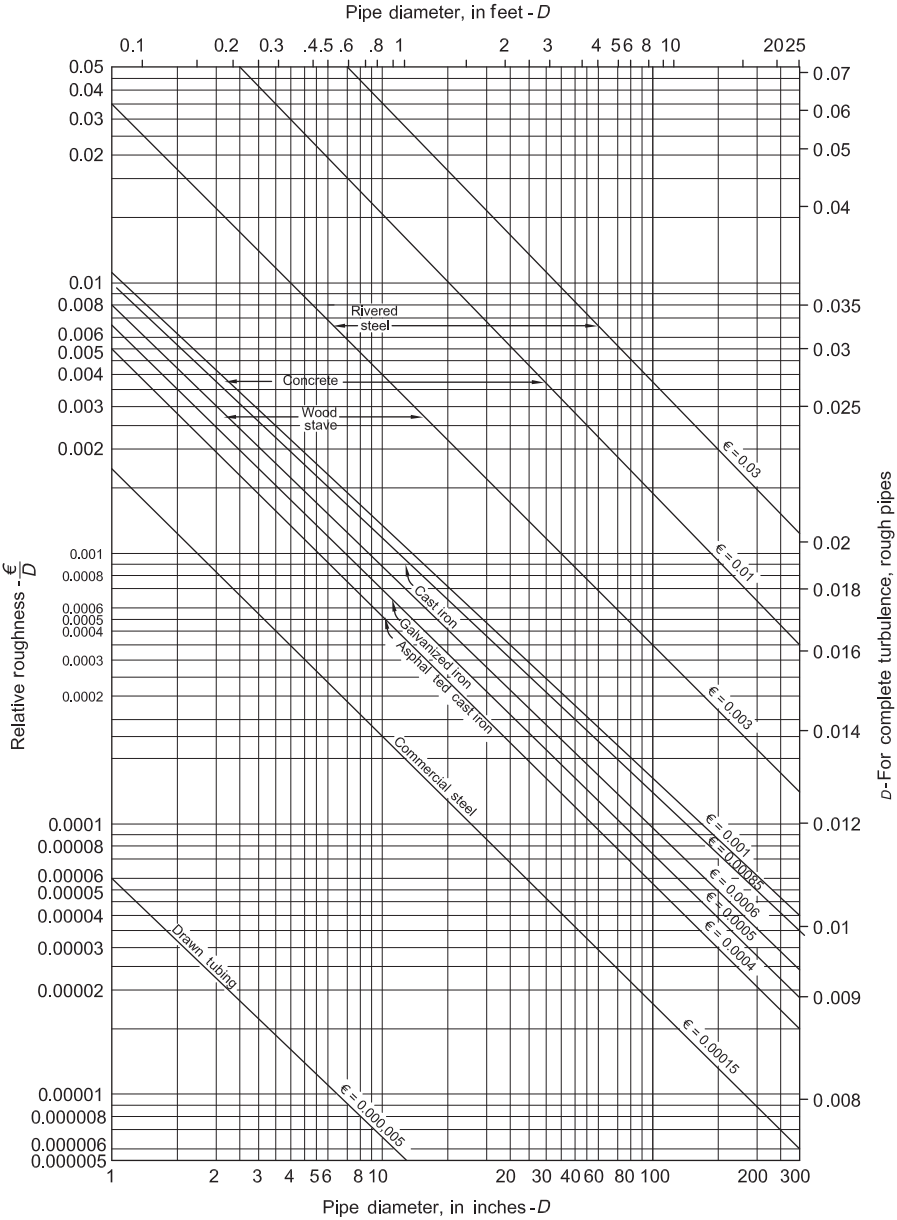

Figure 6.15 Relative roughness of pipe material.
Courtesy of Crane Corporation.

Table 6.11 Estimated roughness for gas transmission line piping

Nominal diameter (in.)	ε (in.)
4	0.001230
6	0.001230
8	0.001230
10	0.001182
12	0.001134
14	0.001086
16	0.001038
18	0.000990
20	0.000942
22	0.000894
24	0.000846
26	0.000798
28	0.000750
30+	0.000700

Note: relative roughness $= \varepsilon/d$; $e =$ from this table; $d =$ pipe inside diameter.

where

$\mu =$ gas viscosity (lbm/ft./s).

while the critical Reynolds number is calculated using the following equation:

$$\mathrm{Re_c} = 20{,}912\left(\frac{d}{\varepsilon}\right)\log_{10}(3.7d/\varepsilon) \tag{6.55}$$

Example 6.7 *Application of the AGA equation (field units)*

Given:

Data from Exercises 6.2 and 6.6

Determine:

As a check on the pipe sizes determined in the Weymouth and Panhandle "B" equations, determine the pipe size using the AGA equation.

Solution:

(1) From Examples 6.2 and 6.6,
$P_1 = 1214.7$ psia,
$P_2 = 1014.7$ psia,
$T_0 = 520°\mathrm{R}$,
$P_0 = 14.7$ psia,
$Z_a = 0.863$,
$T = 530°\mathrm{R}$,
$L = 15$ miles,
$Q = 100$ MMSCFD.

Assume that the elevation change over 15 miles of a gas cross-country pipeline is 100 ft. and the gas viscosity is $\mu = 8.0 \times 10^{-6}$ lbm/ft./s.

$$F_t = \sqrt{1/f}$$

To obtain line transmission factor from flow Reynolds number

Re millions	F	Re millions	F	Re millions	F	Re millions	F	Re millions	F	Re millions	F
.10000	14.727	.40000	16.897	1.0000	18.346	4.0000	20.556	10.000	22.028	40.000	24.268
.10500	14.803	.40500	16.917	1.0500	18.423	4.0500	20.576	10.500	22.107	40.500	24.288
.11000	14.876	.41000	16.936	1.1000	18.497	4.1000	20.596	11.000	22.182	41.000	24.308
.11500	14.945	.41500	16.955	1.1500	18.568	4.1500	20.615	11.500	22.253	41.500	24.328
.12000	15 011	.42000	16.974	1.2000	18.635	4.2000	20.635	12.000	22.322	42.000	24.347
.12500	15.075	.42500	16.993	1.2500	18.700	4.2500	20.654	12.500	22.388	42.500	24.366
.13000	15.136	.43000	17.011	1.3000	18.763	4.3000	20.672	13.000	22.451	43.000	24.385
.13500	15.195	.43500	17.029	1.3500	18.823	4.3500	20.691	13.500	22.512	43.500	24.404
.14000	15.251	.44000	17 047	1.4000	18.880	4.4000	20.709	14.000	22.570	44.000	24.423
.14500	15.306	.44500	17.083	1.4500	18.936	4.4500	20.727	14.500	22.627	44.500	24.441
.15000	15.359	.45000	17.065	1.5000	18.990	4.5000	20.745	15.000	22.682	45.000	24.459
.15500	15.410	.45500	17.100	1.5500	19.042	4.5500	20.763	15.500	22.735	45.500	24.477
.16000	15.460	.46000	17.117	1.6000	19.093	4.6000	20.780	16.000	22.786	46.000	24.495
.16500	15.508	.46500	17.134	1.6500	19.142	4.6500	20.798	16.500	22.835	46.500	24.512
.17000	15.554	.47000	17.151	1.7000	19.190	4.7000	20.815	17.000	22.884	47.000	24.530
.17500	15.600	.47500	17.168	1.7500	19.236	4.7500	20.332	17.500	22.930	47.500	24.547
.18000	15.644	.48000	17.184	1.8000	19.281	4.8000	20.849	18.000	22.976	48.000	24.564
.18500	15.687	.48500	17.201	1.8500	19.324	4.8500	20.865	18 500	23.020	48.500	24.581
.19000	15.728	.49000	17.217	1.9000	19.367	4.9000	20.882	19.000	23.063	49.000	24.597
.19500	15.769	.49500	17.233	1.9500	19.408	4.9500	20.898	19.500	23.105	49.500	24.614
										50.000	24.630
.20000	15.809	.50000	17 249	2.0000	19.449	5.0000	20.914	20.000	23.146		
.20500	15.847	.51000	17.280	2.0500	19.488	5.1000	20.946	20.500	23.186		
.21000	15.885	.52000	17.311	2.1000	19.526	5.2000	20.977	21.000	23.225		
.21500	15.922	.53000	17.341	2.1500	19.564	5.3000	21.008	21.500	23.263		
.22000	15.958	.54000	17.370	2.2000	19.601	5.4000	21.038	22.000	23.300		
.22500	15.993	.55000	17.399	2.2500	19.656	5.5000	21.067	22.500	23.337		
.23000	16.027	.56000	17.428	2.3000	19.672	5.6000	21.096	23.000	23.372		
.23500	16.061	.57000	17.456	2.3500	19.706	5.7000	21.124	23.500	23.407		
.24000	16.094	.58000	17.483	2.4000	19.739	5.8000	21.152	24.000	23.441		
.24500	16.126	.59000	17.510	2.4500	19.772	5.9000	21.180	24.500	23.474		
.25000	16.158	.60000	17.537	2.5000	19.805	6.0000	21.207	25.000	23.507		
.25500	16.189	.61000	17.563	2.5500	19.836	6.1000	21.233	25.500	23.539		
.26000	16.220	.62000	17.589	2.6000	19.867	6.2000	21.259	26.000	23.570		
.26500	16.250	.63000	17.614	2.6500	19.898	6.3000	21.285	26.500	23.601		
.27000	16.279	.64000	17.639	2.7000	19.928	6.4000	21.310	27.000	23.631		
.27500	16.308	.65000	17.663	2.7500	19.957	6.5000	21.335	27.500	23.661		
.28000	16.336	.66000	17 687	2.8000	19.986	6.6000	21.360	28.000	23.690		
.28500	16.364	.67000	17.711	2.8500	20.014	6.7000	21.384	28.500	23.719		
.29000	16.391	.68000	17.735	2.9000	20.042	6.8000	21.408	29.000	23.747		
.29500	16.418	.69000	17.758	2.9500	20.069	6.9000	21.431	29.500	23.775		
.30000	16.444	.70000	17.781	3.0000	20.096	7.0000	21.454	30.000	23.802		
.30500	16.470	.71000	17.803	3.0500	20.122	7.1000	21.477	30.500	23.829		
.31000	16.496	.72000	17.825	3.1000	20.148	7.2000	21.500	31.000	23.855		
.31500	16.521	.73000	17.847	3.1500	20.174	7.3000	21.522	31.500	23.881		
.32000	16.546	.74000	17.869	3.2000	20.199	7.4000	21.544	32.000	23.907		
.32500	16.570	.75000	17.890	3.2500	20.224	7.5000	21.565	32.500	23.932		
.33000	16.594	.76000	17.911	3.3000	20.248	7.6000	21.587	33.000	23.956		
.33500	16.618	.77000	17.931	3.3500	20.273	7.7000	21.608	33.500	23.981		
.34000	16.641	.78000	17.952	3.4000	20.296	7.8000	21.628	34.000	24.005		
.34500	16.664	.79000	17.972	3.4500	20.320	7.9000	21.649	34.500	24.028		
.35000	16.687	.80000	17.942	3.5000	20.343	8.0000	21.669	35.000	24.052		
.35500	16.709	.82000	18.031	3.5500	20.365	8.2000	21.709	35.500	24.075		
.36000	16.731	.84000	18.069	3.6000	20.388	8.4000	21.747	36.000	24.097		
.36500	16.753	.86000	18.107	3.6500	20.410	8.6000	21.785	36.500	24.120		
.37000	16.774	.88000	18.143	3.7000	20.432	8.8000	21.822	37.000	24.142		
.37500	16.795	.90000	18.179	3.7500	20.453	9.0000	21.858	37.500	24.163		
.38000	16.816	.92000	18.214	3.8000	20.474	9.2000	21.894	38.000	24.185		
.38500	16.837	.94000	18.248	3.8500	20.495	9.4000	21.928	38.500	24.206		
.39000	16.857	.96000	18.281	3.9000	20.516	9.6000	21.962	39.000	24.227		
.39500	16.877	.98000	18.314	3.9500	20.536	9.8000	21.996	39.500	24.246		

Figure 6.16 Transmission factors for "partially turbulent" flow regime for use in the AGA equation. Courtesy of AGA.

(2) Calculate the Reynolds number:

$$\begin{aligned} \mathrm{Re} &= 477.5 \times 10^{-6} \left[\frac{QSP_0}{\mu d T_0} \right] \\ &= 477. \times 10^{-6} \left[\frac{(100 \times 10^6)(0.621)(14.7)}{(8 \times 10^{-6})(11.0)(520)} \right] \\ &= 9.526 \times 10^6 \end{aligned} \tag{6.54}$$

(3) Calculate the critical Reynolds number for a comparison. Assume $d = 11.0$ in. and $\varepsilon = 0.001158$ in. from Table 6.11:

$$\begin{aligned} \mathrm{Re_c} &= 20{,}912\left(\frac{d}{\varepsilon}\right)\log_{10}(3.7d/\varepsilon) \\ &= 20{,}912\left(\frac{11.0}{0.001158}\right)\log_{10}\left(3.7\left(\frac{11.0}{0.001158}\right)\right) \\ &= 9.03\times 10^5 \end{aligned} \tag{6.55}$$

(4) Calculate the transmission factor.

Since the Reynolds number is well in excess of the critical Reynolds number, we use Equation 6.53:

$$\begin{aligned} F &= 4.0\log_{10}(3.7d/\varepsilon) \\ &= 4.0\log_{10}\left[3.7\left(\frac{11.0}{0.001158}\right)\right] \\ &= 18.18 \end{aligned} \tag{6.53}$$

(5) Calculate the average pressure level:

$$\begin{aligned} Pa &= 2/3\left[\frac{P_1^2 - P_2^3}{P_1^2 - P_2^2}\right] \\ &= 2/3\left[\frac{(1214.7)^3 - (1014.7)^2}{(1214.7)^2 - (1014.7)^2}\right] \\ &= 1117.7\,\mathrm{psia} \end{aligned} \tag{6.51}$$

(6) Calculate the elevation correction factor (E_c):

$$\begin{aligned} E_c &= \frac{0.0375S(h_2 - h_1)P_a^2}{Z_a T} \\ &= \frac{(0.0375)(0.621)(100)(1117.7)^2}{(0.863)(530)} \\ &= 6.3604\times 103 \end{aligned} \tag{6.50}$$

(7) Solve the AGA equation for diameter:

$$\begin{aligned} d^{-2.5} &= 38.77F\left(\frac{T_0}{P_0}\right)\frac{1}{Q}\left[\frac{P_1^2 - P_2^2 - E_c}{StZ_aL_m}\right]^{0.5} \\ &= 38.77(18.18)\left(\frac{520}{14.7}\right)\left(\frac{1}{100\times 10^6}\right)\times\left[\frac{(1214.7)^2 - (1014.7)^2 - \left(6.3604\times 10^3\right)}{(0.621)(530)(0.863)(15)}\right]^{0.5} \\ &= 2.532\times 10^{-3} \end{aligned} \tag{6.49}$$

$$\begin{aligned} d &= \left(2.532\times 10^{-3}\right)^{\frac{1}{-2.5}} \\ &= 10.90\ \text{in.} \end{aligned}$$

The AGA equation predicts a required pipe diameter of 10.90 in., which is close to the estimated value of 11.0 in.

Discussion:
Of interest is the effect of the elevation correction factor. If the elevation effects had been ignored, then

$$
\begin{aligned}
d^{-2.5} &= (38.77)(18.18)\left(\frac{520}{14.7}\right)\left(\frac{1}{100\times 10^6}\right)\left[\frac{(1214.7)^2-(1014.7)^2}{(0.621)(530)(0.863)(15)}\right]^{0.5}\\
&= 2.5506\times 10^{-3}\\
d &= \left(2.5506\times 10^{-3}\right)^{\frac{1}{-2.5}}\\
&= 10.898 \text{ in.}
\end{aligned}
$$

As can be seen, the elevation effects have a very small effect on the required pipe diameter.

6.10.2.10 Elevation corrections

Of the equations discussed, only the AGA equation contains an elevation correction factor. The other equations evaluate only the frictional component of pressure drop. Normally, in a gas line, only the frictional pressure drop is of practical significance. Gas transmission lines usually traverse terrain with little elevation change. Lower density of gases compared with liquids makes hydrostatic pressure variations much less than the hydrostatic effects in liquid lines having comparable elevation changes. When a gas transmission line encounters an elevation change of hundreds of feet, the AGA equation with its elevation correction factor should be used. The equation should be applied segmentally between the top and bottom of each major rise and fall. For very severe terrain, such as pipelines traversing mountainous regions, elevation effects can become significant.

6.10.2.11 Comparison of gas equations

The Weymouth and Spitzglass equations both assume that the friction factor is a function of pipe diameter only. Figure 6.17 compares the friction factors calculated from these equations with the factors indicated by the horizontal line portion of the Moody diagram for two absolute roughness.

In the small pipe diameter range (3-6 in. (75-150 mm)), all curves tend to yield identical results. For large-diameter pipe (10 in. (250 mm) and above), the Spitzglass equation becomes overly conservative. The curve is going in the wrong direction, and thus, the form of the equation must be wrong. If used, its predictive results are higher pressure drops than actually observed. The Weymouth equation tends to become optimistic with pipe diameters greater than 20 in. (500 mm). If used, its predictive results are lower pressure drops than actually observed. Its slope is greater than the general flow equation with $\varepsilon = 0.002$ in. These results occur because of the ways the Spitzglass and Weymouth equations approximate the Moody diagram.

The empirical gas flow equations use various coefficients and exponents to account for efficiency and friction factor. These equations represent the flow condition at

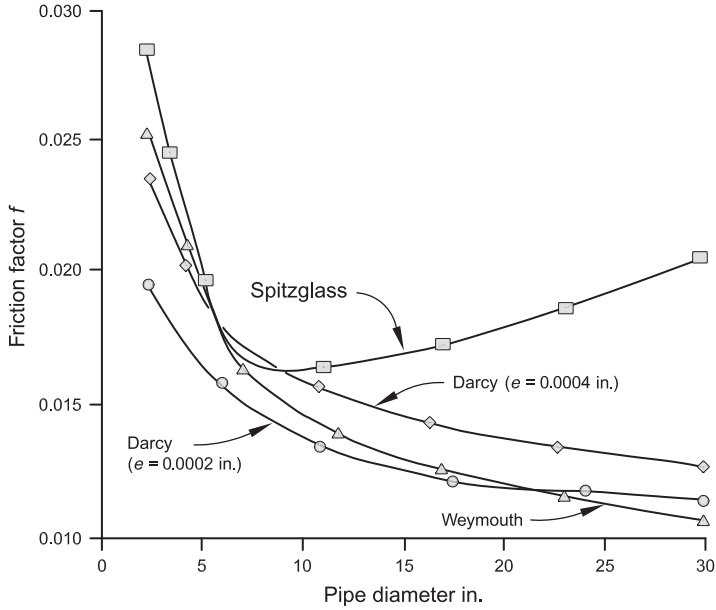

Figure 6.17 Friction factor versus pipe diameter for three correlations.

which they were derived but may not be accurate under different conditions. Unfortunately, these equations are often used as if they were universally applicable.

6.10.2.12 Selection of gas flow equations

6.10.2.12.1 General equation

General Equation—Use for most general usage. If it is inconvenient to use the iterative procedure of the general equation but high accuracy is required, compute the results using both the Weymouth and Panhandle "B" equations and use the higher calculated pressure drop.

6.10.2.12.2 Weymouth equation

The Weymouth Equation—Use the Weymouth equation only for small-diameter, short run pipe within the production facility where the Reynolds number is expected to be high. The use of the Weymouth equation for pipe greater than 20 in. (500 mm) in diameter or in excess of 15,000 ft. (4600 m) long is not recommended.

6.10.2.12.3 Panhandle "B" equation

The Panhandle "B" Equation—Use the Panhandle "B" equation only for large-diameter, long run pipelines where the Reynolds number is expected to be moderate.

6.10.2.12.4 Spitzglass equation

Spitzglass Equation—Use the Spitzglass equation for low-pressure vent lines less than 12 in. (300 mm) in diameter.

6.10.2.12.5 Oliphant equation

Oliphant Equation—Use the Oliphant equation for lines with pressures less than 35 psig (2 barg) and gases with gravities between 0.7 and 0.8.

6.10.2.12.6 Gas equation graphs

Gas Equation Graphs—Use gas equation graphs only for "quick look" approximate screening calculations or for a rough check on calculations using the equations.

When using the gas flow equations for old pipe, attempt to derive the proper efficiency factor through field tests. Buildup of scale, corrosion, liquids, paraffin, etc., can have a large effect on gas flow efficiency.

6.10.3 Steam equations

Two equations are universally used. These equations are based on different assumptions but yield similar results.

6.10.3.1 Fritzsche's equation

Takes the form

$$\Delta P = \frac{0.8\overline{VLW^{1.85}}}{d^{4.97}} \tag{6.56}$$

and

$$\Delta P = \frac{2.1\overline{VLw^{1.85}}}{10^7 d^{4.97}} \tag{6.57}$$

where

ΔP = differential pressure (psig),
W = rate of flow (lbs/h),
w = rate of flow (lbs/s),
$\overline{V}$ = specific volume of flow (ft.^{3}/lb),
L = length of pipe (ft.),
d = pipe inside diameter (in.).

6.10.3.2 Babcock equation

Takes the form

$$\Delta P = 3.63 \times 10^{-8}\left(\frac{d+3.6}{d^6}\right)W^2 L\overline{V} \tag{6.58}$$

and

$$\Delta P = 0.470\left(\frac{d+3.6}{d^6}\right)w^2 L\overline{V} \tag{6.59}$$

where

ΔP = differential pressure (psig),
W = rate of flow (lbs/h),
w = rate of flow (lbs/s),
$\overline{V}$ = specific volume of fluid (ft.^{3}/lb),
L = length of pipe (ft.),
d = pipe inside diameter (in.).

6.10.4 Two-phase flow

There are situations where more than one fluid phase is transported simultaneously through a pipeline. Examples of two-phase flow are found in pipelines transporting natural gas and condensate and crude oil and associated gas. These conditions occur when fluids are transported in a pipeline such as

- crude oil produced below the bubble point,
- natural gas produced above the dew point.

Two-phase flow is further complicated by the presence of a second liquid phase, such as

- water with oil,
- gas or glycol with gas and condensate stream.

Designing a pipeline for two-phase or multiphase flow is complex because the properties and flow patterns of two or more fluids must be covered in the design.

6.10.4.1 Factors that effect two-phase flow

When designing a two-phase pipeline, the following factors must be considered:

- Liquid volume fraction
- Pipeline profile
- Flow regime
- Liquid holdup
- Two-phase pressure loss

Knowing how much gas and liquid is present in a hydrocarbon mixture is essential in designing a two-phase flow pipeline. The two-phase gas-liquid composition of a hydrocarbon mixture is best illustrated by a phase envelope. The phase envelope is a graphic representation of the relative quantities of gas and liquid present in a mixture at various pressures and temperatures. Figure 6.18 is an example of a typical phase envelope of a gas-condensate reservoir. It illustrates the pressure-temperature operating profiles for a pipeline with varying flow rates. The phase envelope shows the

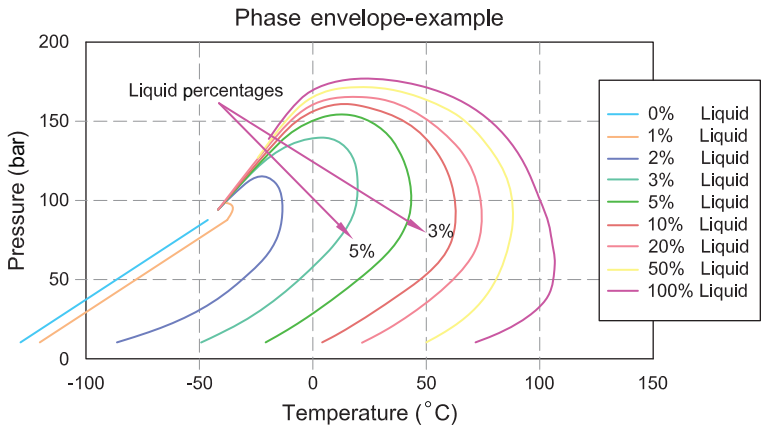

Figure 6.18 Typical phase envelope of a gas-condensate reservoir.

liquid percentage in the fluid at each point. For example, the liquid percentage changes from about 3% at the inlet to about 5% at the outlet.

6.10.4.1.1 Liquid volume fraction

The liquid volume fraction is the fraction of fluid flowing as a liquid present at a local point in the pipeline. The phase envelope illustrated in Figure 6.18 graphically represents this. It is determined by assuming that thermodynamic equilibrium exists between the two phases at the local pressure and temperature. The equation for liquid volume fraction is expressed as shown in Equation 6.60

$$V_{SG}, V_{SL} \tag{6.60}$$

where

V_{SG} = superficial gas velocity,
V_{SL} = superficial liquid velocity.

The superficial liquid velocity is the velocity the liquid would have in the pipeline, if only the liquid phase was present. Likewise, the superficial gas velocity is the velocity the gas would have, if only the gas phase was present.

6.10.4.1.2 Pipeline profile

Changes in elevation of the pipeline route play an important role in two-phase flow pipeline design and operation. The elevation profile influences the liquid holdup and determines the flow regime. This in turn impacts the pressure loss incurred during the two-phase flow.

6.10.4.1.3 Liquid holdup

The liquid holdup is the accumulation of liquid in the pipeline due to the difference in velocity, "slip," between the phases and the influence of gravity. This is illustrated in Figure 6.19. Liquid holdup is usually larger than the liquid volume fraction. The only exception might be during a downward sloping flow at low velocity.

6.10.4.1.4 Two-phase flow regimes

The way in which gas and liquid simultaneously flow within a pipeline is characterized by the flow regime. Flow regimes indicate the distribution of the phases over the cross-sectional area of the pipeline. The type of flow pattern depends primarily on the gas and liquid flow rates. Some of the most commonly occurring two-phase flow regimes in a pipeline are the following:

- Bubble flow
- Annular dispersed flow
- Stratified or laminar flow
- Plug or churn flow
- Slug flow

The relative positions of the liquid and gas as they move along the pipeline depend on whether the flow is horizontal or vertical. When a gas-liquid mixture enters a horizontal pipeline, the two phases tend to separate with the heavier liquid settling to the bottom. The type of flow pattern depends primarily on the gas and liquid flow rates. Figure 6.20 shows typical horizontal two-phase pipe flow. Horizontal flow regimes can be described as follows:

6.10.4.1.4.1 Horizontal flow regimes

6.10.4.1.4.1.1 Dispersed bubble flow In this type of flow, bubbles of gas flow along with the liquid at about the same velocity. Gas bubbles move along the upper part of the pipe.

6.10.4.1.4.1.2 Elongated bubble (plug flow) It is similar to bubble flow, except the gas bubbles coalesce into large bubbles or plugs. Gas bubbles become larger and form moderate-size gas plugs.

6.10.4.1.4.1.3 Stratified smooth flow In stratified flow, both the gas plugs become longer until the gas and liquid flow separately with a distinct and relatively smooth interface between them. Gas flows in the upper part and liquid moves in the lower

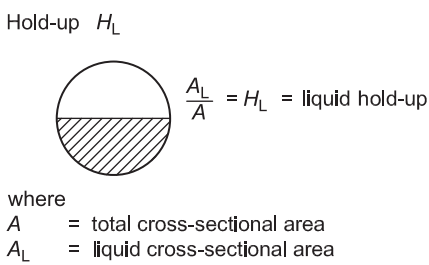

Figure 6.19 Liquid holdup in a pipeline.

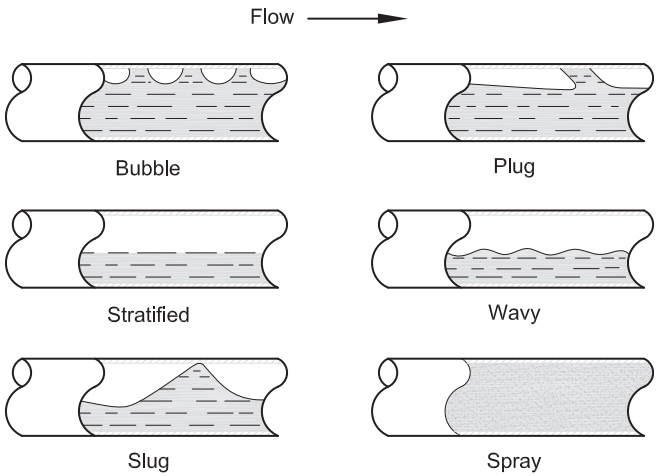

Figure 6.20 Two-phase flow regimes in a horizontal pipe.

part of the pipe. Sometimes, a wave is formed in which case it is called stratified wavy flow. This type of flow is commonly seen in downhill lines.

6.10.4.1.4.1.4 Slug flow Slug flow is similar to stratified wavy flow, except that the top of some waves touches the top of the pipe wall, trapping gas slugs between wave crests. Flow tends to be alternative slugs of liquid and gas. The length of these slugs can be several hundred feet long in some cases. This is probably the most commonly encountered regime in level and uphill lines. The intermittent nature of the liquid slugs makes downstream separator sizing more difficult, which may require larger separation facilities.

6.10.4.1.4.1.5 Annular-mist flow At extremely high gas-liquid ratios, the liquid slugs become more and more aerated until they are indistinguishable from the intervening bubbles. In this condition, the liquid coats the pipe wall in an annular layer and the gas flows in the core, suspending droplets of liquid.

Figure 6.21 can be used to approximate the type of flow regime expected for any flow condition. Coordinates of this map are superficial liquid velocity (V_{SL}) and superficial gas velocity (V_{SG}). A superficial velocity is the volumetric flow rate of that phase divided by the total pipe cross-sectional area. The use of superficial liquid and gas velocities is an attempt to normalize fluid flow rates on pipe size. This flow regime map should be used only for very rough regime estimation, because it was developed for horizontal pipe flowing air and water at low pressure.

Fluid properties alter the map, and pipe inclination has a profound effect on the map. Inclination changes from horizontal on the order of 0.1-1.0° effect large changes in the map. Upward inclinations cause the growth of the slug flow regime at the expense of the stratified flow regime, while downward inclinations cause the growth of the stratified flow regime at the expense of the slug flow regime.

Two-phase flow patterns in vertical flow are somewhat different than those occurring in horizontal flow. Different flow regimes may occur at different segments of

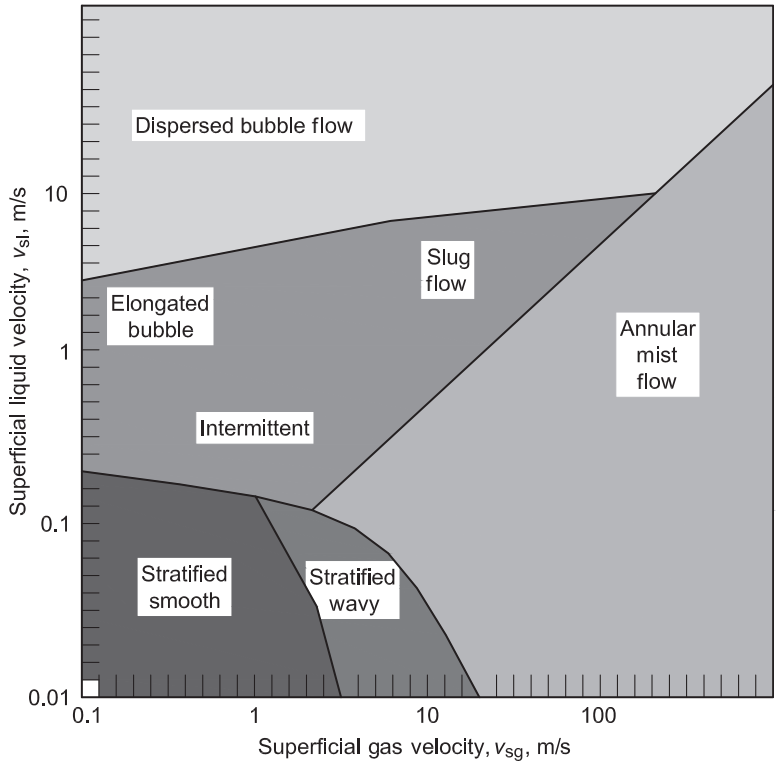

Figure 6.21 Horizontal multiphase flow regime map.
Courtesy of P. Griffith, "Multiphase Flow in Pipes," JPT, March 1984, pp. 363–367.

pipe, such as flow in a well tubing string where the pressure loss causes gas to come out of solution as the fluid moves up the well. Figure 6.22 shows typical flow regimes in vertical two-phase flow. Vertical flow regimes can be described as follows:

6.10.4.1.4.2 Vertical flow regimes

6.10.4.1.4.2.1 Bubble flow In this type of flow, bubbles of gas are present as small, randomly distributed bubbles, whose diameters also vary randomly. The bubbles move at different velocities depending upon their respective diameters. The liquid moves up the pipe at a fairly uniform velocity, and, except for its density, the gas phase has little effect on the pressure gradient.

6.10.4.1.4.2.2 Slug flow In this type of flow, the gas phase is more pronounced. Although the liquid phase is still continuous, the gas bubbles coalesce and form stable bubbles of approximately the same size and shape, which are nearly the diameter of the pipe. These bubbles are separated by slugs of liquid. In vertical flow, alternative slugs of liquid flow in the center of the pipe along with the gas. Both the gas and liquid phases have significant effects on the pressure gradient.

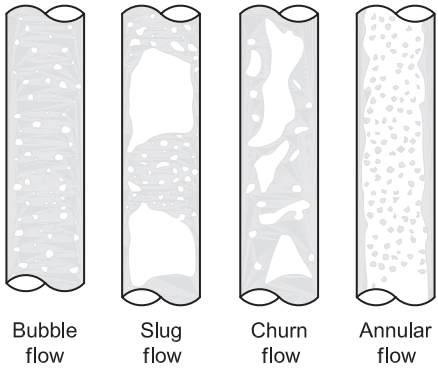

Figure 6.22 Two-phase flow regimes in a vertical pipe.
JPT, Brill, "Multiphase Flow in Wells," JPT, January 1987, pp. 15–21.

6.10.4.1.4.2.3 Churn (transition) flow The change from a continuous liquid phase to a continuous gas phase occurs in this region. The gas phase is predominant and the liquid becomes entrained in the gas. The gas bubbles coalesce into large bubbles or plugs. The gas plugs tend to flow in the center of the pipe. The effects of the liquid are still significant.

6.10.4.1.4.3 Annular-mist flow In this flow regime, the gas phase is continuous and the bulk of the liquid is entrained in and carried by in the gas. The liquid flows along the wall of the pipe, while the gas flows at high velocity in the center of the pipe. The effects of the liquid film on the pipe wall are secondary. The gas phase is the controlling factor.

Normally, flow in oil wells is in the slug or transition flow regime. Flow in gas wells can be in mist flow. Figure 6.23 can be used to determine the type of regime to be expected.

6.10.4.1.5 Two-phase pressure loss

The pressure drop in a two-phase pipeline is higher than that of a single-phase pipeline. The increased pressure loss is essentially caused by the additional friction loss due to the formation of waves and slugs. A number of different correlations have been developed by different authors to predict pressure loss in a pipeline for two-phase flow. Some are more suitable than others for specific fluid types, giving varying levels of uncertainty. Many companies develop their own correlations for two-phase flow that can be generally applied.

Specialized computer simulation programs are used to evaluate the behavior of two-phase pipelines. The simulation programs take the input data and use two-phase flow equations and correlations to determine the flow regimes, pressure loss, and liquid holdup for the pipeline. The graph in Figure 6.24 shows the required pipeline inlet pressure to achieve a fixed outlet pressure for a range of throughputs and pipeline diameters. This is a typical output and is invaluable in determining the optimum pipeline diameter.

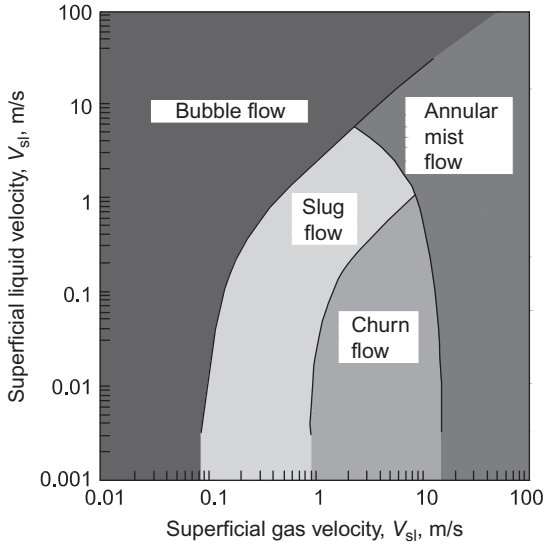

Figure 6.23 Vertical multiphase flow regime map.
Courtesy of Yaitel, Bamea, D. and Duckler, A.E. "Modeling Flow Pattern Transition for Steady Upward Gas-liquid Flow in Vertical Tubes," AICHE J. May 1980, pp. 345–354.

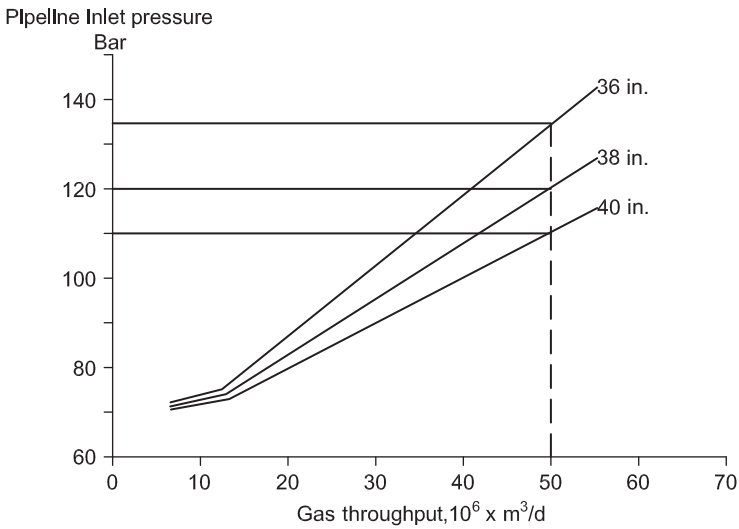

Figure 6.24 Required pipeline inlet pressure to achieve a fixed outlet pressure.

6.10.4.1.6 Two-phase liquid holdup

When designing a two-phase pipeline, a graph, similar to that shown in Figure 6.25, is usually generated showing how liquid holdup varies with throughput and with varying pipeline diameters. This is an invaluable piece of information. In a two-phase pipeline, the designer must predict the amount of liquid expected to be present and then manage it. An understanding of how the anticipated liquid holdup in a pipeline will vary with flow rates will greatly help in formulating a suitable liquid management system. This could include a slug catcher, pigging facilities, or operational limits on ramp-up times.

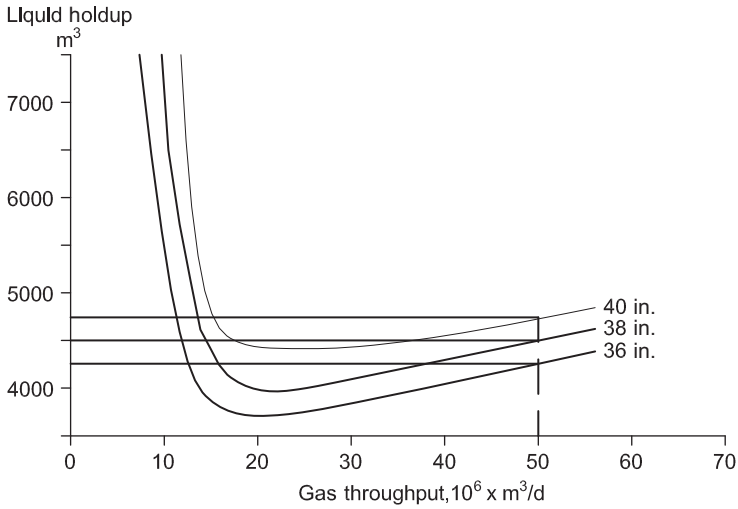

Figure 6.25 Liquid holdup versus gas throughput.

6.10.4.1.7 Two-phase flow correlations

In two-phase piping, pressure drop is caused by the friction developed due to the energy transfer between the two phases, as well as that between each phase and the pipe wall. Pressure drop calculations must take into account the additional friction loss due to the energy transfer between phases.

The detailed calculation of pressure drops in two-phase pipelines requires an evaluation of phase changes due to pressure and temperature changes, evaluation of liquid holdup using empirical formulas, and evaluation of energy transfer between the phases. These are addressed in the many computer programs available. It is beyond the scope of this text to evaluate all the equations that have been proposed in the literature or to develop a new computer algorithm.

It should be kept in mind that even under the best conditions, small changes from horizontal in piping systems can lead to large errors in calculating pressure drop. Table 6.12 lists several commercial programs that are available to model pressure drop. Because all are based to some degree on empirical relations, they are limited in accuracy to the data sets from which the relations were designed. It is not unusual for measured pressure drops in the field to differ by ±20% from those calculated by any of these models.

The following three correlations have been found to give reasonable results when used within the limitations inherent in their derivation.

6.10.4.1.7.1 Beggs and Brill equation This correlation was developed by two University of Tulsa engineering students, Dale Beggs and James Brill. Their original procedure first appeared in the May 1973 issue of the *Journal of Petroleum Technology*. Almost all correlations prior to the Beggs and Brill equation could predict pressure drop in two-phase flow for vertical or horizontal flow only. Prior to 1973, however, no correlation existed for predicting the pressure drop in two-phase flow

Table 6.12 Hydraulic modeling and flow assurance software[a]

Multiphase transient simulation	Multiphase steady-state simulation	Slingle-phase gas/liquid transient simulation
OLGA ProFES	Pipe flow, well flow PIPEPHASE PIPESIM-SUITE GENNET-M Flowsystem Prosper, Gap Perform	Pipeline simulator Winflo NATASHA PLUS TLNET TGNET

[a]This table lists the current, commercially available state-of-the-art pipeline design and operations software for hydraulic modeling and flow assurance for single-phase, two-phase, and multiphase flow systems.

at any angle of inclination. Beggs and Brill therefore set out to develop such a correlation.

The original article presents a specific description on the experimental procedure used to develop this method. Such a description is beyond the scope of this text. The Beggs and Brill method was correlated using small-diameter pipe and generally should be applied to pipelines 8 in. (200 mm) or less in diameter.

Using the best correlations available for pressure drop and liquid holdup, predictions may vary in error by

±20% for perfectly horizontal pipe,
±50% for inclined and looped systems.

Selection of the appropriate correlation should be based on field data and reservoir phase characteristics. Two commonly used correlations include

API RP 14E approximation equation,
the AGA equation.

Both correlations work well under specific conditions.

6.10.4.1.7.2 API RP 14E The following formula, presented in the American Petroleum Institute's Recommended Practice API RP 14E, is derived from general equation for isothermal flow assuming that the pressure drop is less than 10% of the inlet pressure:

Field units:

$$\Delta P = \frac{3.36 \times 10^{-6} f L (W_{\mathrm{h}})^2}{\rho_{\mathrm{m}} d^5} \tag{6.61a}$$

SI units:

$$\Delta P = 62.561 \frac{f L (W_{\mathrm{h}})^2}{\rho_{\mathrm{m}} d^5} \tag{6.61b}$$

where

ΔP = pressure drop (psi (kPa)),
L = length of pipe (ft. (m)),
W_h = flow rate of liquid and vapor (lb/h (kg/h)),
ρ_m = mixture density (lb/ft.^{3} (kg/m^3)),
d = pipe inside diameter (in. (mm)),
f = Moody friction factor.

This equation assumes that there is no energy interchange between the phases, that bubble or mist flow exists so that the fluid can be described by average mixture density, and that there are no elevation changes.

The flow rate of the mixture to use in this equation can be calculated as follows:

Field units:

$$W_h = 3180 Q_g S + 14.6 Q_l (\mathrm{SG}) \tag{6.62a}$$

SI units:

$$W_h = 1.21 Q_g S + 999.7 Q_l (\mathrm{SG}) \tag{6.62b}$$

where

W_h = flow rate of liquid and vapor (lb/h (kg/h)),
Q_g = gas flow rate (MMSCFD (std m^3/h)),
Q_l = liquid flow rate (BPD (m^3/h)),
S = specific gravity of gas relative to air,
SG = specific gravity of liquid relative to water.

The density of the mixture to use in Equation 6.62 is given by

Field units:

$$\rho_m = \frac{12{,}409(SG)P + 2.7RSP}{198.7P + RTZ} \tag{6.63a}$$

SI units:

$$\rho_m = \frac{28{,}814(SG)P + 34.81RSP}{28.82P + 10.0RTZ} \tag{6.63b}$$

where

ρ_m = mixture density (lb/ft.^{3} (kg/m^3)),
P = pressure (psia (kPa)),
SG = specific gravity of the liquid relative to water (use the average gravity for the hydrocarbon and water mixture),
S = specific gravity of gas relative to air,
R = gas-liquid ratio (std ft.^{3}/bbl (std m^3/m^3)),
T = temperature (^{o}R (°K)),
Z = gas compressibility factor, dimensionless.

6.10.4.1.7.3 AGA equations The American Gas Association method uses a frictional pressure drop calculation originally developed by Dukler and an elevation pressure drop calculation originally developed by Flanigan. This seventeen-step method is an iterative procedure described in the Fluid Flow and Piping sections of the GPSA Engineering Data Book and in a later section of this chapter.

The AGA equation is based on the following conditions:

- High gas-liquid ratios
- Dukler for frictional component pressure drop
- Flanigan for elevation component at pressure drop

The overall two-phase pressure drop is expressed as follows:

$$\Delta P_t = \Delta P_f + \Delta P_e \tag{6.64}$$

where

ΔP_t = total two-phase pressure drop (psi),
ΔP_f = frictional component of pressure drop (psi),
ΔP_e = elevation component of pressure drop (psi).

Frictional component of total two-phase pressure drop is

$$\Delta P_f = \frac{f_n f_{tpr} \rho_k V_m^2 L_m}{(0.14623)d} \tag{6.65}$$

Elevation component of pressure drop is

$$\Delta P_e = \left(\frac{\rho H_{Lf}}{144}\right)\left(\sum Z_e\right) \tag{6.66}$$

where

f_n = single-phase friction factor,
f_{tpr} = friction factor ratio,
ρ_k = two-phase mixture density (lb/ft.^{3}),
ρ = density of liquid (lb/ft.^{3}),
V_m = mixture of velocity (ft./s),
L_m = pipeline length (miles),
d = pipe inside diameter (in.),
H_{Lf} = Flanigan liquid holdup fraction,
$\sum Z_e$ = sum of vertical elevation rises of pipe (no elevation drops are considered) (ft.).

6.10.4.1.7.4 Calculation procedure

(1) Determine the following liquid volume fraction from the following:

$$\lambda = \frac{Q_L}{Q_L + Q_g} \tag{6.67}$$

where
λ = lowing liquid volume fraction,
Q_L = liquid flow rate at flowing conditions (ft.^{3}/s),
Q_g = gas flow rate at flowing conditions (ft.^{3}/s).

(2) Determine the mixture viscosity for the Dukler calculation from the following:

$$\mu_n = \mu_L \lambda + \mu_g (1 - \lambda) \tag{6.68}$$

where
μ_n = mixture viscosity (cP),
μ_L = liquid viscosity (cP),
μ_g = gas viscosity (cP),
λ = flowing liquid volume fraction.

(3) Calculate the superficial liquid velocity from the following:

$$V_{SL} = \frac{Q_L}{A} \tag{6.69}$$

where
V_{SL} = superficial liquid velocity (ft./s),
Q_L = liquid flow rate at flowing conditions (ft.^{3}/s),
A = cross-sectional area of pipe (ft.^{2}),
= $(\pi d^2)/4$,
d = internal pipe diameter (ft.).

(4) Calculate the superficial gas velocity from the following:

$$V_{sg} = \frac{Q_g}{A} \tag{6.70}$$

where
V_{sg} = superficial gas velocity (ft./s),
Q_a = gas flow rate at flowing conditions (ft.^{3}/s),
A = cross-sectional area of pipe (ft.^{2}),
= $(\pi d^2)/4$,
d = internal pipe diameter (ft.).

(5) Calculate the mixture velocity from the following:

$$V_m = V_{sl} + V_{sg} \tag{6.71}$$

where
V_m = mixture velocity (ft./s),
V_{sl} = superficial liquid velocity (ft./s),
V_{sg} = superficial gas velocity (ft./s).

(6) Calculate the friction factor ratio from the following equation:

$$f_{tpr} = \frac{1}{1.281 - 0.478y + 0.444^2 - 0.094y^3 + 0.00843y^4} \tag{6.72}$$

where

f_{tpr} = Friction factor ratio
$y = -/n(\lambda)$

(7) Calculate the two-phase mixture density from the following:

$$\rho_k = \frac{\rho\lambda^2}{H_{Ld}} + \frac{\rho_g\left(1-\lambda^2\right)}{\left(1-H_{Ld}\right)} \tag{6.73}$$

where
ρ_k = two-phase mixture density (lb/ft.^{3}),
ρ = density of liquid (lb/ft.^{3}),
ρ_g = density of gas (lb/ft.^{3}),
λ = flowing liquid fraction,
H_{Ld} = Dukler liquid holdup fraction,
= A for the first estimate (assumption).

(8) Calculate an estimate for the mixture Reynolds number from the following:

$$\mathrm{Re}_\gamma = \frac{(124.0)\rho_k V_m d}{\mu_n} \tag{6.74}$$

where
Re_γ = mixture Reynolds number,
ρ_k = two-phase mixture density (lb/ft.^{3}),
V_m = mixture velocity (ft./s),
d = pipe inside diameter (in.),
μ_n = mixture viscosity (cP).

(9) Determine a better estimate for the Dukler liquid holdup fraction (HLD) from Figure 6.26, using A and the Reynolds number calculated in step 8.

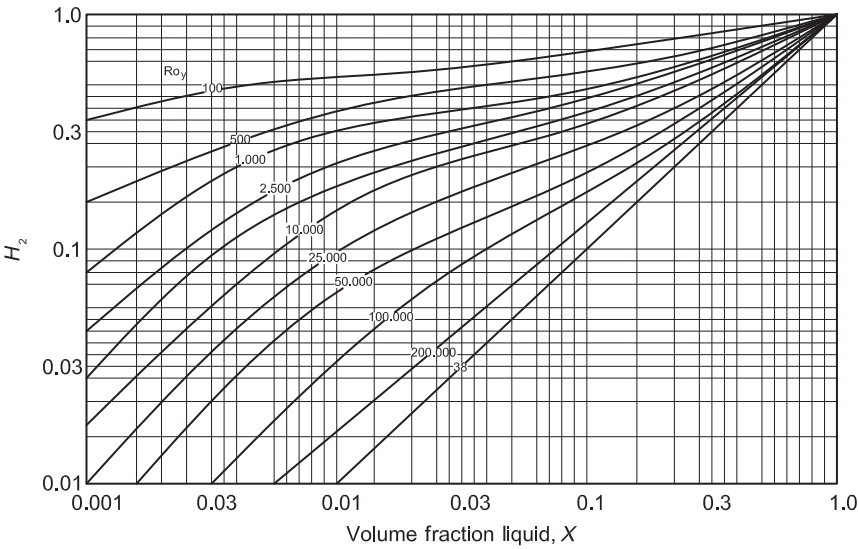

Figure 6.26 Dukler liquid holdup fraction.

(10) Recalculate the mixture density (ρ_k) using the improved estimate of HLD in the following:

$$\rho_k = \frac{\rho\lambda^2}{H_{LD}} + \frac{\rho_g(1-\lambda)^2}{(1-H_{LD})} \tag{6.73}$$

where
ρ_k = two-phase mixture density (lb/ft.^{3}),
ρ = density of liquid (lb/ft.^{3}),
ρ_g = density of gas (lb/ft.),
λ = flowing liquid volume fraction,
H_{LD} = Dukler liquid holdup fraction.

(11) Using this new value of ρ_k, recalculate the mixture Reynolds number (Re_γ):

$$Re_\gamma = \frac{(124.0)\rho_k V_m d}{\mu_m} \tag{6.74}$$

(12) Go back to step 9 and use Figure 6.26 to determine a new value for HLD. Continue this iterative procedure until convergence.

(13) Calculate the single-phase friction factor from the following:

$$f_n = 0.0056 + 0.5\left(Re_\gamma\right)^{0.32} \tag{6.75}$$

where
f_n = single-phase friction factor,
Re_γ = mixture Reynolds number.

(14) Calculate the frictional pressure drop from Equation 6.66

$$\Delta P_f = \frac{f_n f_{tpr} \rho_k V_m^2 L_m}{(0.14623)d} \tag{6.65}$$

where
ΔP_f = frictional pressure drop (psi),
f_n = single-phase friction factor,
f_{tpr} = friction factor ratio,
ρ_k = two-phase mixture density (lb/ft.^{3}),
V_m = mixture velocity (ft./s),
L_m = length of pipe (miles),
d = pipe inside diameter (in.).

(15) Determine the Flanigan liquid holdup fraction from Figure 6.27 or from the following equation:

$$H_{Lf} = \frac{1}{1 + 0.3264\left(V_{sg}\right)^{1.006}} \tag{6.76}$$

where
H_{Lf} = Flanigan liquid holdup fraction,
V_{sg} = superficial gas velocity (ft./s).

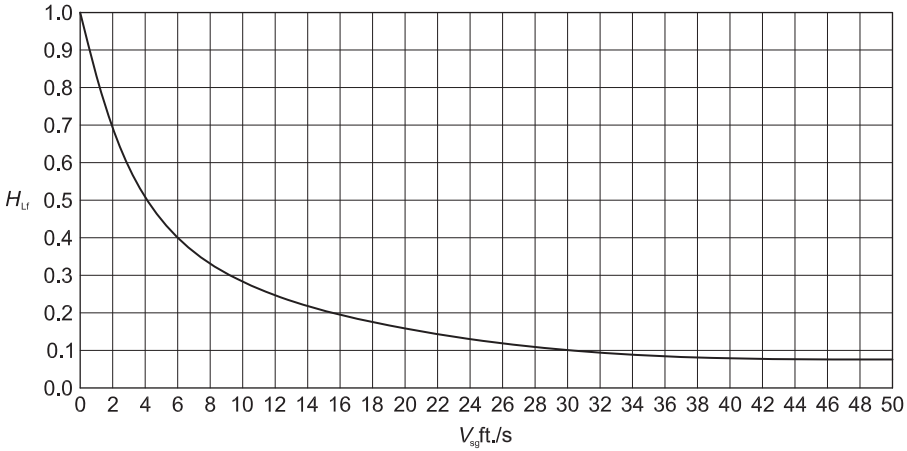

Figure 6.27 Flanigan liquid holdup fraction.

(16) Calculate the elevation component from Equation 6.67

$$\Delta P_e = \frac{\rho H_{Lf}}{144} \sum Z_e \tag{6.66}$$

where
ΔP_e = elevation component of pressure drop (psi),
ρ = density of liquid (lb/ft.^{3}),
H_{Lf} = Flanigan liquid holdup fraction,
$\sum Z_e$ = sum of vertical elevation rises of pipe (no elevation drops are considered) (ft.).

(17) Calculate the overall two-phase pressure drop from Equation 6.65

$$\Delta P_t = \Delta P_f + \Delta P_e \tag{6.64}$$

where
ΔP_t = total two-phase pressure drop (psi),
ΔP_f = frictional component of pressure drop (psi),
ΔP_e = elevation component of pressure drop (psi).

Example 6.8 *Application of the AGA equation for two-phase flow (field units)*

Given:

Data in Example 6.1 and 6.2

Determine:

Calculate the pressure drop with both liquid and gas flow in a single 4, 6, and 8 in. line using the AGA equation.

Solution:

(1) Calculate the liquid volume fraction:

$$\lambda = \frac{Q_L}{Q_L + Q_g} \tag{6.67}$$

(2) Calculate the mixture viscosity:

$\mu_n =$ Calculate the mixture viscosity

$$\begin{aligned}\mu_n &= \mu_L\lambda + \mu_g(1-\lambda)\\ &= (3)(0.022) + (0.013)(1-0.022)\\ &= 0.079\,\text{cP}\end{aligned} \tag{6.68}$$

(3) Calculate the superficial liquid velocity:

$$V_{sl} = \frac{Q_L}{A} \tag{6.69}$$

$$V_s = \frac{0.067\text{ft.}^3/\text{s}}{A}$$

Term	Diameter		
	4 in.	**6 in.**	**8 in.**
V_{sl}	0.768 ft./s	0.341	0.192

(4) Calculate the superficial gas viscosity:

$$\begin{aligned}V_{sg} &= \frac{Q_g}{A}\\ &= \frac{2.97\text{ft.}^3/\text{s}}{A}\end{aligned} \tag{6.70}$$

Term	Diameter		
	4 in.	**6 in.**	**8 in.**
V_{sg}	34 ft./s	15.1 ft./s	8.51 ft./s

(5) Calculate the mixture velocity:

$$V_m = V_{sl} + V_{sg} \tag{6.71}$$

Term	Diameter		
	4 in.	**6 in.**	**8 in.**
v_m	35.0 ft./s	15. 4 ft./s	9.0 ft./s

(6) Calculate the friction factor ratio:

$$f_{\text{tpr}} = \frac{1}{1.28 - 0.478y + 0.444y^2 - 0.094y^3 + 0.00843y^4} = 0.403 \tag{6.72}$$

(7) Calculate the two-phase mixture density:

Assume

$$H_{\text{LD}} = \lambda$$

$$\rho_{\text{k}} = \frac{\rho\lambda^2}{H_{\text{LD}}} + \frac{\rho_{\text{g}}(1-\lambda)^2}{(1-H_{\text{LD}})} \tag{6.73}$$

where

$$\rho = (62.4)(\text{SG}) = (62.4)(0.91) = 56.8\,\text{lb/ft.}^3$$

and

$$\rho_{\text{g}} = 270\left(\frac{\text{SP}}{TZ}\right) = \frac{(2.70)(0.85)(9.15)}{(540)(0.67)} = 580\,\text{lb/ft.}^3$$

Substitute

$$\rho_{\text{k}} = \frac{(56.8)(0.022)^2}{0.022} + \frac{(5.80)(1-0.022)^2}{(1-0.022)} = 1.25\,\text{lb/ft.}^3 + 5.67\,\text{lb/ft.}^3 = 6.92\,\text{lb/ft.}^3$$

(8) Calculate the mixture Reynolds number:

$$\text{Re}_\gamma = \frac{(124.0)\rho_{\text{k}}V_{\text{m}}d}{\mu} = \frac{(124.0)\left(\frac{D}{6.92}\right)(V_{\text{m}})(d)}{0.079} \tag{6.74}$$

Term	Diameter		
	4 in.	**6 in.**	**8 in.**
Re_γ	1.52×10^6	1.00×10^6	7.82×10^5

(9) Determine a better estimate for the Dukler liquid holdup fraction (HLD) from Figure 6.26 using λ and the Reynolds number calculated in step 8.
In this example, the Reynolds number is so large that the value of H_{LD} is equal to λ.

(10) Recalculate the two-phase mixture density using the improved estimate of HLD:

$$\begin{aligned}\rho_k &= \frac{\rho\lambda^2}{H_{LD}} + \frac{\rho_g(1-\lambda)^2}{(1-H_{LD})} \\ &= \frac{(56.8)(0.022)^2}{0.022} + \frac{(580)(1-0.022)^2}{(1-0.022)} \\ &= 6.92\,\text{lb/ft.}^3\end{aligned} \tag{6.73}$$

(11) Recalculate the mixture Reynolds number using the new value of ρ_k:

$$\begin{aligned}\text{Re}_\gamma &= \frac{(124.0)(\rho_k)(V_m)(d)}{\mu_n} \\ &= \frac{(124.0)(6.92)(V_m)d}{(0.079)}\end{aligned} \tag{6.74}$$

Term	Diameter		
	4 in.	**6 in.**	**8 in.**
Re_Y	1.52×10^6	1.00×10^6	7.82×10^5

(12) Go back to step 9 and use Figure 6.26 to determine a new value for HLD; continue this iterative procedure until convergence.

(13) Calculate the single-phase friction factor:

$$f_n = 0.0056 + 0.5(\text{Re}_Y)^{-0.32} \tag{6.75}$$

Term	Diameter		
	4 in.	**6 in.**	**8 in.**
f_n	1.08×10^{-2}	1.16×10^{-2}	1.21×10^{-2}

Steps 14, 15, and 16 calculate the frictional and elevation pressure drop components. These are used to determine the overall two-phase pressure drop.

(14) Calculate the frictional pressure drop component:

$$\begin{aligned}\Delta P_f &= \left[\frac{(f_n)(f_{tpr})(\rho_k)(V_m^2)(L_m)}{(0.14623)d}\right] \\ &= \left[\frac{(f_n)(0.403)(6.92)(V_m^2)\left(\frac{7000}{5280}\right)}{(0.14623)d}\right]\end{aligned} \tag{6.65}$$

Term	Diameter		
	4 in.	6 in.	8 in.
ΔP_f	84 psi	12 psi	3 psi

(15) Calculate the Flanigan liquid holdup fraction from Equation 6.77 or Figure 6.28:

$$H_{Lf} = \frac{1}{1 + 0.3264\left(V_{sg}\right)^{1.006}} \tag{6.76}$$

Term	Diameter		
	4 in.	6 in.	8 in.
H_{Lf}	8.1×10^{-2}	16×10^{-1}	2.6×10^{-1}

(16) Calculate the elevation pressure drop component. In this example, we assume no elevation changes; thus, there will be no elevation pressure drop component.

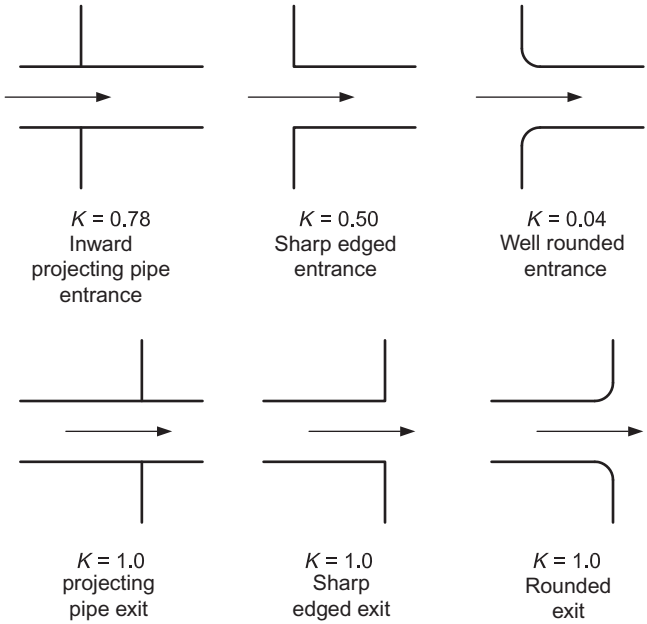

Figure 6.28 Resistance coefficients for different types of pipe entrances and exits. Courtesy of Paragon Engineering.

(17) Add the frictional component (ΔP_f) and the elevation component (ΔP_e) to obtain the total overall pressure drop (ΔP_t).

Term	Diameter		
	4 in.	**6 in.**	**8 in.**
ΔP_t	84 psi	12 psi	3 psi

API RP 14E approximation equation for two-phase flow is based on the following assumptions:

- Pressure drop is less than 10% P_1.
- Bubble or mist flow exists.
- No elevation changes.
- No irreversible energy transfer between phases.

The frictional pressure drop in a two-phase steel piping system may be estimated using a simplified Darcy equation.

Given:

$$D = \text{ft.},\ \overline{V} = \text{ft.}^3/\text{Ib},\ W = \text{Ib/s and } g = 32.3\text{ft./s}^2$$

and

$$w^2 = \left[\frac{144gA^2d}{\overline{V}_1 fL}\right]\left[\frac{P_1^2 - P_2^2}{P_1}\right]$$

For

$$\frac{\Delta P}{P_1} < 10\% \text{ of } P_1$$

then

$$P_1^2 - P_2^2 = 2P_1\Delta P$$

where

$$\Delta P = \left[\frac{\overline{V}_1 fL}{(144)gA^2D}\right]\frac{W^2}{2}$$

and

$$\overline{V} = \frac{1}{\rho_m}$$

and

$$A = \frac{\pi d^2}{(4)(144)}$$

$$D = \frac{d}{12}$$

$$w = \frac{W}{3600}$$

Substituting and solving for pressure drop, the API RP 14E approximation equation reduces to the form

$$\Delta P = \frac{3.36 \times 10^{-6} f L W^2}{\rho_m d^5} \tag{6.61a}$$

where

ΔP = pressure drop (psi/100 ft.),
d = pipe inside diameter (in.),
f = Moody friction factor,
ρ_m = gas-liquid density at flowing pressure and temperature (lb/ft.^{3}),
W = total liquid plus vapor flow rate (lbs/h).

The mixture rate is derived as follows:
Given:

L = liquid flow rate (lb/h)
G = gas flow rate (lb/h)

Converting to "oil field" units,

$$\begin{aligned} L &= \left(Q_1 \frac{\text{Bbl}}{\text{Day}}\right)\left(5.61 \frac{\text{ft.}^3}{\text{Bbl}}\right)\left(\frac{\text{day}}{24\text{h}}\right)(62.4)(\text{SG})\left(\frac{\text{lbs}}{\text{ft.}^3}\right) \\ &= 14.6(Q)(\text{SG}) \end{aligned}$$

and

$$\begin{aligned} G &= \left(Q_g \frac{\text{MMSCF}}{\text{Day}}\right)\left(\frac{1{,}000{,}000 SCF}{MM}\right)(0.0764)(S)\left(\frac{lb}{SCF}\right)\left(\frac{1\,\text{day}}{24\text{ h}}\right) \\ &= 3180 Q_g S \end{aligned}$$

since

$$W = G + L$$

Substituting, we have

$$W = 3180 Q_g S + 14.6 Q_1 (\text{SG}) \tag{6.62a}$$

where

Q_g = gas flow rate (MMSCFD),
Q_L = liquid flow rate (BPD),
S = specific gravity of gas (air = 1),
SG = specific gravity of liquid (water = 1).

The gas-liquid mixture density may be calculated using a derived equation:

Given:

G = gas flow rate (ft.^{3}/s)
Q_g = MMSCFD
L = ft.^{3}/s
Q_L = BPD
W = lbs/h

Converting to "oil field" units,

$$G = (Q_L)\left(1 \times 10^{-6}\frac{SCF}{MM}\right)\left(\frac{\text{day}}{24\text{h}}\right)\left(\frac{\text{h}}{3600\text{ s}}\right)\left(\frac{14.7}{P}\right)\left(\frac{TZ}{520}\right)$$

$$L = (Q_L)\left(5.61\frac{\text{ft.}^3}{\text{Bbl}}\right)\left(\frac{\text{day}}{24\text{h}}\right)\left(\frac{\text{h}}{3600\text{s}}\right)$$

$$W = 3180Q_gS + 14.6Q_L(\text{SG})$$

Converting mixture flow rate to lb/s and substituting the above terms,

$$\rho_m = \frac{W}{3600(L+g)}$$

substituting

$$\rho_m = \frac{3180Q_gS + 14.6Q_L(\text{SG})}{3600\left[\left(6.49 \times 10^{-5}\right)(Q_L) + 0.327\left(\frac{Q_gTZ}{P}\right)\right]}$$

Assume

$$R = 1 \times 10^6(Q_s/Q_L)$$

$$\rho_m = \frac{3180Q_gS + \left[\frac{(14.6)1\left(1 \times 10^6\right)Q_g(\text{SG})}{R}\right]}{3600\left[\left[\frac{\left(6.49 \times 10^{-5}\right)\left(1 \times 10^6\right)\left(Q_g\right)}{R}\right] + 0.327\left(\frac{Q_{gTZ}}{P}\right)\right]}$$

Factoring out Q_g, multiplying the top and bottom by $\left(\frac{RP}{1177}\right)$, and rearranging, we obtain the final form

$$\rho_m = \frac{12409(\text{SG})P + 2.7RSP}{198.7P + RTZ} \tag{6.63a}$$

where

ρ_m = gas-liquid mixture density at flowing pressure and temperature (lbs/ft.^{3}),
P = operating pressure (psia),
T = operating temperature (°R),

R = gas-liquid ratio (ft.^{3}/bbl),
SG = liquid specific gravity (water = 1),
S = gas specific gravity (air = 1),
Z = gas compressibility factor, dimensionless.

Example 6.9a *Application of API RP 14E approximation equation (field units)*

Given:

Data in Examples 6.1 and 6.2

Determine:

Calculate the pressure drop with both liquid and gas flow in a single 4, 6, and 8 in. line using the API RP 14E equation.

Solution:
Determine data needed for equation:

SG (Liquid) = 0.91
S = 0.85
Z = 0.67
Q_g = 23 MMSCFD
Q_c = 800 BPD
Q_w = 230 BPD
Q_L = 1030 BPD
F (assume) = 0.204 (rough pipe)

Calculate mixture flow rate:

$$\begin{aligned} W &= 3180 Q_g S + 14.6 Q_L (\mathrm{SG}) \\ &= 3180(23)(0.85) + 14.6(1030(0.91) \\ &= 75,854 \mathrm{lb/h} \end{aligned} \tag{6.62a}$$

Calculate gas-liquid ratio:

$$\begin{aligned} R &= \frac{23,000,000}{1030} \\ &= 22,330 \mathrm{ft.}^3/\mathrm{bbl} \end{aligned}$$

Calculate the mixture density at flowing pressure of 900 psi:

$$\begin{aligned} \rho_m &= \frac{12409(SG)P + 2.7RSP}{198.7P + RTZ} \\ &= \frac{12409(0.91)(915) + (2.7)(22,330)(0.85)(915)}{(198.7)(915) + (22,330)(540)(0.67)} \\ &= 6.93 \mathrm{lb/ft.}^3 \end{aligned} \tag{6.63a}$$

Calculate the approximate pressure drop:

$$\begin{aligned} \Delta P &= \frac{3.4 \times 10^{-6} f L W^2}{\rho_m d^5} \\ &= \frac{(3.4 \times 10^{-6})(0.0204)(7000)(75,854)^2}{(6.930 d^5} \\ &= \frac{3.98 \times 10^5}{d^5} \end{aligned} \tag{6.61a}$$

Term	Diameter		
	4 in.	6 in.	8 in.
ΔP	398 psi	51 psi	12 psi

Example 6.9b *Application of API RP 14E approximation equation (SI units)*

Given:

Flow rates: Condensate = 5.30 m^3/h
Water = 1.52 m^3/h
Gas = 27,100 std m^3/h
Specific gravity: Condensate = 0.87
Water = 1.05
Gas = 0.85
Viscosity: Condensate and Water = 0.003 Pa s
Gas = 1.3×10^{-5} Pa s
Inlet pressure = 6200 kPa
Temperature = 27 °F
Compressibility factor = 0.67
Length = 2130 m
Absolute roughness = 0.045 mm

Determine:

Calculate the pressure drop with both liquid and gas flow in 101.6, 152.4, and 203.2 mm lines using the API RP 14E equation.

Solution:
Calculate mixture flow rate:

$$\begin{aligned} W &= 1.21 Q_g S + 999.7 Q_L (\mathrm{SG}) \\ &= 1.21(27,100)(0.85) + 999.7(6.82)(0.91) \\ &= 34,077 \mathrm{kg/h} \end{aligned} \tag{6.62b}$$

Calculate gas-liquid ratio:

$$\begin{aligned} R &= \frac{27,100}{6.82} \\ &= 3,973.6 \mathrm{std\ m^3/m^3} \end{aligned}$$

Calculate the mixture density at flowing pressure of 6200 kPa:

$$\begin{aligned} \rho_m &= \frac{28,814(\mathrm{SG})P + 34.8RSP}{28.82P + (10.0)RTZ} \\ &= \frac{28,814(0.91)(6303) + (34.81)(3,973.6)(0.85)(6303)}{(28.82)(6303) + (3,973.6)(300)(0.67)} \\ &= 110.95 \mathrm{kg/m^3} \end{aligned} \tag{6.63b}$$

Calculate the approximate pressure drop:

$$\begin{aligned}\Delta P &= \frac{62{,}561 f L W^2}{\rho_m d^5} \\ &= \frac{(62{,}561)(0.0204)(2130)(34{,}077)^2}{(110.95)d^5}.\end{aligned} \tag{6.61b}$$

Term	Diameter		
	101.6 mm	152.4 mm	203.2 mm
ΔP	2628 kPa	346 kPa	82 kPa

6.11 Head loss in valves and pipe fittings

The pressure drop equations described above are useful for calculating the pressure drop-flow rate relations in straight runs of pipe. In many piping situations, including those in most production facilities where space is limited, the additional pressure drop through valves, pipe fittings, and enlargements and contractions is a major portion of the overall pressure drop in the pipe segment. For piping systems within production facilities, the pressure drop through fittings and valves can be much greater than that through straight run of pipe itself. In long pipeline systems, the pressure drop through fittings and valves can often be ignored. A pipe flow restriction that changes velocity or direction of the flow stream causes pressure drops greater than that that would normally occur in a straight piece of pipe of the same length. The additional frictional effects can be evaluated using an extension of the Darcy-Weisbach equation. The extension involves the determination of either of the following:

- Resistance coefficients for fittings
- Flow coefficients for valves
- Equivalent lengths for both valves and fittings

6.11.1 Resistance coefficients

The head loss in valves and fittings can be calculated by rewriting the Darcy-Weisbach as

$$H_f = K_r \frac{V^2}{2g} \tag{6.77}$$

where

K_r = resistance coefficient, dimensionless,
H_f = head losing fitting (ft. (m)),
V = average velocity (ft./s (m/s)),
g = acceleration of gravity (32.2 ft./s^2 (9.81 m/s^2)).

Comparing Equation 6.78 with the Darcy-Weisbach equation shows that for a straight pipe,

$$K_r = \frac{fL}{D} \tag{6.78}$$

where

K_r = fitting resistance coefficient, dimensionless,
f_m = Moody friction factor, dimensionless,
L = length (ft.),
D = pipe inside diameter (ft.).

Total system frictional losses in valves and fittings can be determined by summing up the head loss in all fittings, as defined by the following equation:

$$\sum H_{Lf} = \sum K \frac{V^2}{2g} \tag{6.79}$$

where

$\sum H_{Lf}$ = total system frictional losses in valves and fittings (ft.).

Once the resistance coefficients for the fittings and valves have been determined, the frictional head losses due to the fittings and valves are calculated and then are added to the frictional head losses for straight runs of pipe.

Approximate values of K_r are given in Table 6.13 for varied pipe fittings. Figures 6.28 and 6.29 show resistance coefficients for sudden contractions and enlargements and for pipe entrances and exits. Figure 6.30 is a listing of representative resistance coefficients from *Crane Technical Paper No. 410*.

Table 6.13 Resistance coefficients for pipe fittings

Fitting	*K*
Globe valve, wide open	10.0
Angle valve, wide open	5.0
Gate valve, wide open	0.2
Gate valve, half open	5.6
Return bend	2.2
Tee	1.8
90°	0.9
45°	0.4

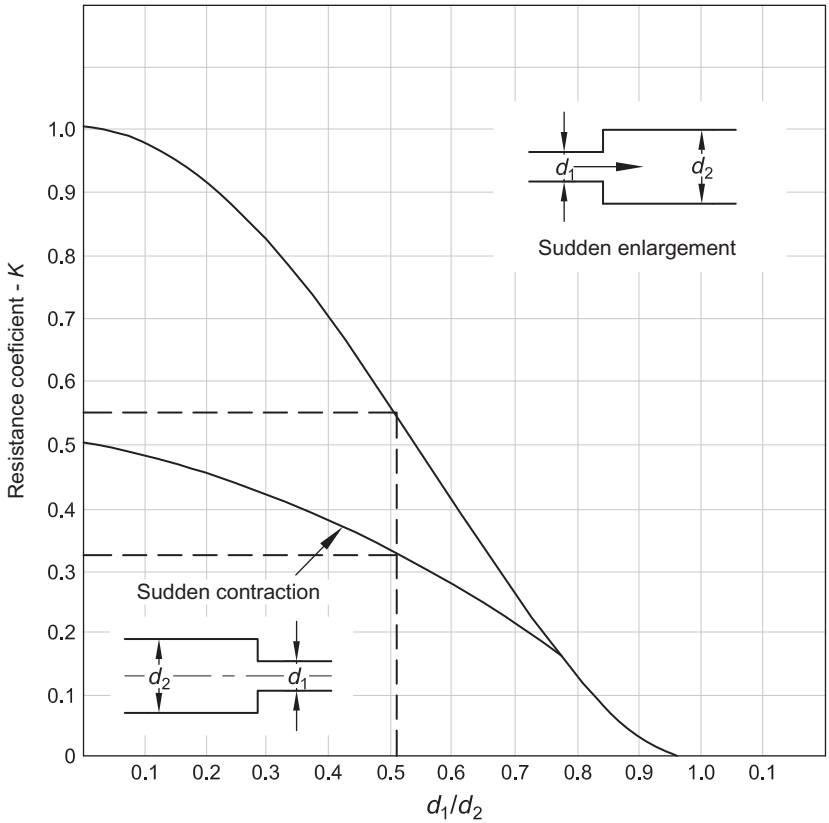

Figure 6.29 Resistance coefficients for sudden enlargements and contractions. Courtesy of Paragon Engineering.

Example 6.10 *Application of resistance coefficients*

Given:

A 4 in. nominal pipe diameter water injection line with 2 full opening gate valves and 10 short-radius 90° bends ($r/d = 1$)

Determine:

Calculate the additional head loss imposed by the gate valves and fittings with a fluid velocity of 5.86 ft./s.

Solution:

(1) Determine the resistance coefficient for 90° bends from Figure 6.30 (4 of 4):

PIPE FRICTION DATA FOR CLEAN COMMERCIAL STEEL PIPE
WITH FLOW IN ZONE OF COMPLETE TURBULENCE

Nominal Size	$\frac{1}{2}$"	$\frac{3}{4}$"	1"	1 $\frac{1}{4}$"	1 $\frac{1}{2}$"	2"	2 $\frac{1}{2}$,3"	4"	5"	6"	8-10"	12-16"	18-24"
Friction Factor (fr)	.027	.025	.023	.022	.021	.019	.018	.017	.016	.015	.014	.013	.012

FORMULAS FOR CALCULATING "K" FACTORS *
FOR VALVES AND FITTINGS WITH REDUCED FOAT

* Formula 1

$$K_2 = \frac{0.8\left(\sin\frac{\theta}{2}\right)\ (1-\beta^2)}{\beta^4} = \frac{K_2}{\beta^4}$$

* Formula 2

$$K_2 = \frac{0.5\ \left(1-\beta^4\right)\ \sqrt{\sin\frac{\theta}{2}}}{\beta^4} = \frac{K_1}{\beta^4}$$

* Formula 3

$$K_2 = \frac{2.6\left(\sin\frac{\theta}{2}\right)\ (1-\beta^2)}{\beta^4} = \frac{K_1}{\beta^4}$$

* Formula 4

$$K_2 = \frac{\left(1-\beta^4\right)^2}{\beta^4} = \frac{K_1}{\beta^4}$$

* Formula 5

$$K_2 = \frac{K_1}{\beta^4} + \text{Formula 1} + \text{Formula 2}$$

$$K_2 = \frac{K_1 + \sin\frac{\theta}{2}\ \ [0.8(1-\beta^4)+2.6(1-\beta^4)^2]}{\beta^4}$$

* Use " K " Furnished By Valve Or Fitting Supplier When Available.

* Formula 6

$$K_2 = \frac{K_1}{\beta^4} + \text{Formula 1} + \text{Formula 2}$$

$$K_2 = \frac{K_1 + 0.5\ \sqrt{\sin\frac{\theta}{2}}\ \left(1-\beta^2\right) + \left(1-\beta^2\right)^2}{\beta^4}$$

* Formula 7

$$K_2 = \frac{K_1}{\beta^4} + \beta\,(\text{Formula 2} + \text{Formula 4})\ \text{When}\ -180°\ \ 0$$

$$K_2 = \frac{K_1 + \beta\ \ \left[0.5\,(1-\beta^2) + (1-\beta^2)^2\right]}{\beta^4}$$

$$\beta = \frac{d_1}{d_2}$$

$$\beta^2 = \left(\frac{d_1}{d_2}\right)^2 = \frac{d_1}{d_2}$$

Subscript 1 Defines Dimensions End Coefficient With Reference To The Smaller Diameter.
Subscript 2 Refers To The Larger Diameter.

SUDDEN AND GRADUAL CONTRACTION

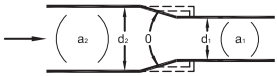

If : 0 ≤ 45° ..... K_2 = Formula 1

45° < 0 ≤ 180° ..... K_2 = Formula 2

SUDDEN AND GRADUAL ENLARGEMENT

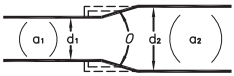

If : 0 ≤ 45° ..... = Formula 3

45° < 0 ≤ 180° ..... = Formula 4

Figure 6.30 Representative resistance coefficients.

(Continued)

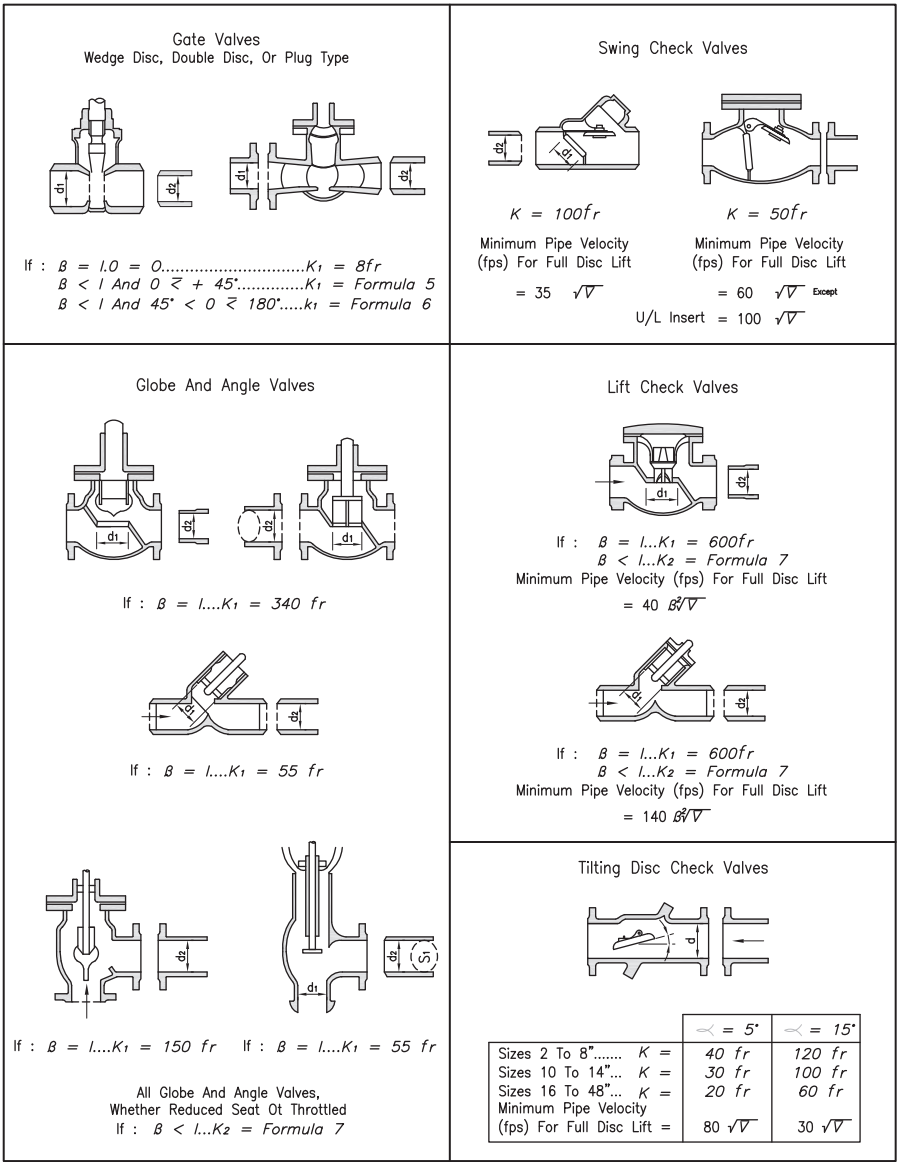

Figure 6.30 Continued.

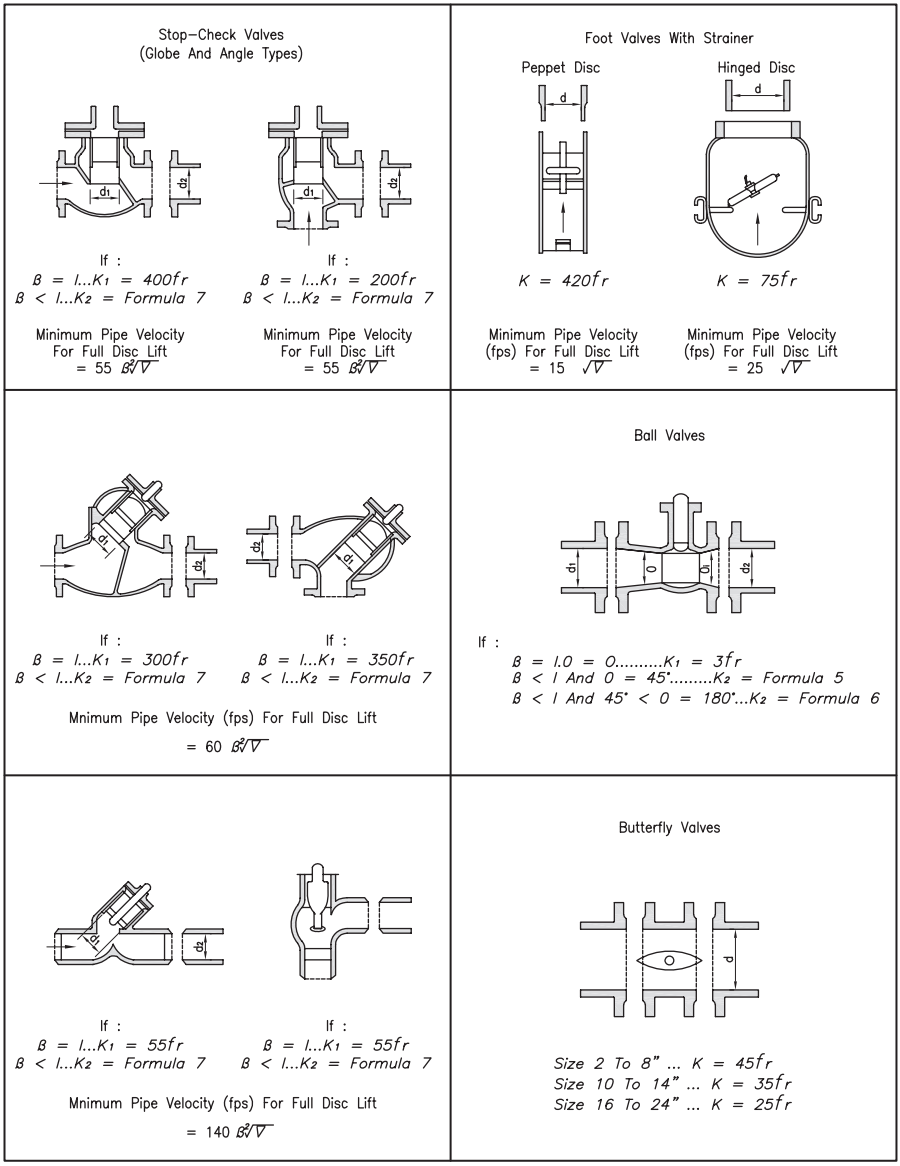

Figure 6.30 Continued.

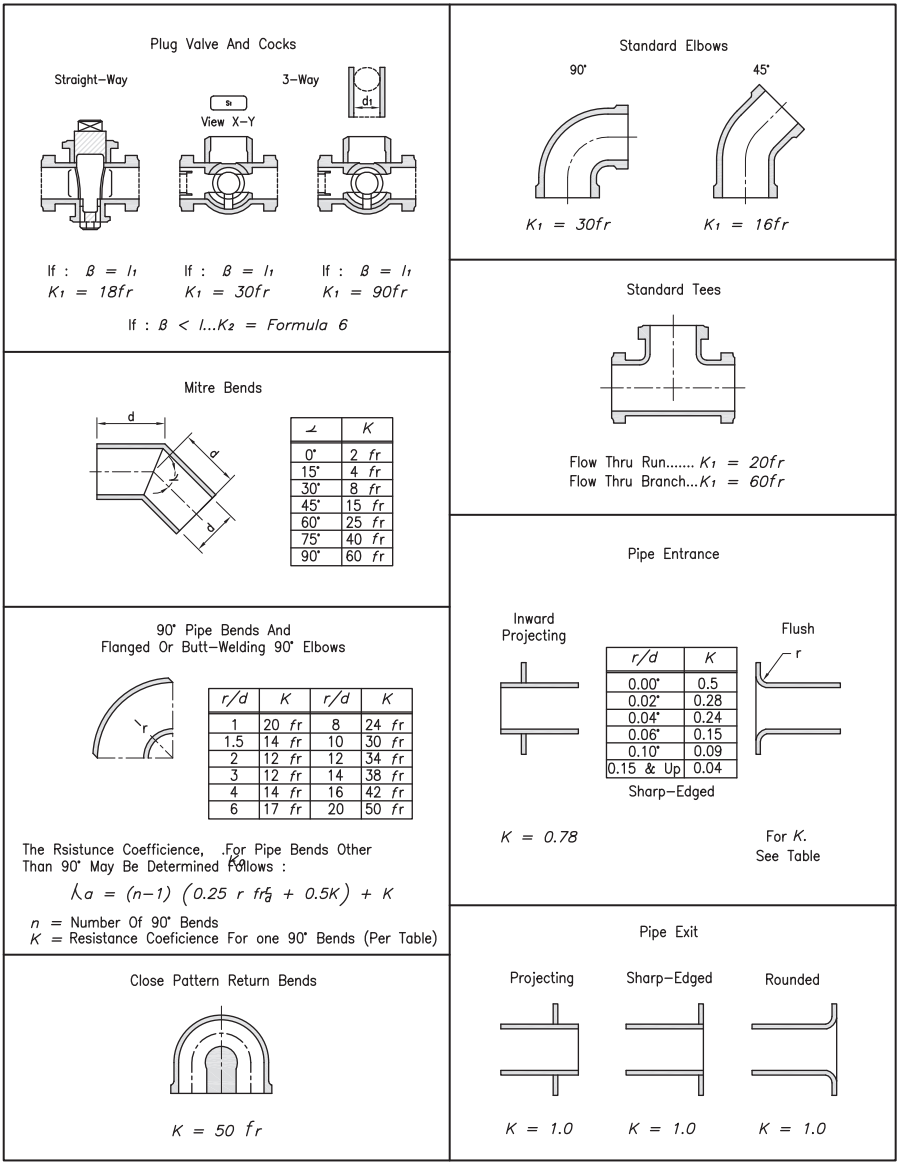

Figure 6.30 Continued.

$$\text{Read}: \; K = 20 f_r$$

From Figure 6.30 (1 of 4) and for a 4 in. nominal pipe diameter,

$$\text{Read}: \; f_r = 0.017$$

Thus,

$$\begin{aligned} K &= (20) f_r \\ &= (20)(0.017) \\ &= 0.340 \end{aligned}$$

(2) Determine the resistance coefficient for the gate valve:
From Figure 6.30 (2 of 4),

$$\begin{aligned} \text{Read}: K_v &= 8 f_r \\ &= (8)(0.017) \\ &= 0.136 \end{aligned}$$

(3) Calculate the total additional head loss imposed by the gate valves and fittings:
H_L for 10 short-radius 90° bends:

$$\begin{aligned} H_L &= (10)(0.340)\frac{(5.86)^2}{(2)(32.17)} \\ &= 1.75\,\text{ft}. \end{aligned}$$

H_L for 2 full opening gate valves:

$$\begin{aligned} H_L &= 2(0.136)\frac{(5.86)^2}{(2)(32.17)} \\ &= 0.14\,\text{ft}. \end{aligned}$$

Total head loss for fittings and valves:

$$\begin{aligned} \sum H_L &= 1.75 + 0.14 \\ &= 1.89\,\text{ft}. \end{aligned}$$

This frictional loss is added to the pipe frictional head loss.

6.11.2 Flow coefficients

The flow coefficient for liquids, C_v, is determined experimentally for each valve or fitting as the flow of water in gpm at 60 °F for a pressure drop of 1 psi through the fitting. It can be shown from the Darcy-Weisbach equation that C_v can be expressed as follows:

Field units:

$$C_v = \frac{29.9d^2}{\left(\frac{fL}{D}\right)^{\frac{1}{2}}} = \frac{29.9d^2}{(K_r)^{\frac{1}{2}}} \tag{6.80a}$$

SI units:

$$C_v = \frac{0.0105d^2}{\left(\frac{fL}{D}\right)^{\frac{1}{2}}} = \frac{0.0105d^2}{(K_r)^{\frac{1}{2}}} \tag{6.80b}$$

where

C_v = flow coefficient (gpm (m^3/h)),
D = fitting equivalent ID (ft. (m)),
d = fitting equivalent ID (in. (mm)),
L = fitting equivalent length (ft. (m)),
K = resistance coefficient, dimensionless.

For any valve with a C_v,

Field units:

$$\Delta P = 8.5 \times 10^{-4} \left(\frac{Q_1}{C_v}\right)^2 (\mathrm{SG}) \tag{6.81a}$$

SI units:

$$\Delta P = 6.89 \left(\frac{Q_1}{C_v}\right)^2 (\mathrm{SG}) \tag{6.81b}$$

where

Q_1 = liquid flow rate (BPD (m^3/h)),
ΔP = pressure drop (psi (kPa)),
SG = specific gravity of liquid relative to water,
C_v = flow coefficient (gpm (m^3/h)).

Derivation of Equation 6.82a:

The general equation for pressure drop is

$$\Delta P = 11.5 \times 10^{-6} \left[\frac{f_{\mathrm{d}} L Q_{\mathrm{L}}^2 (\mathrm{SG})}{d^5} \right]$$

Converting into "oil field" units,

$$\begin{aligned} Q_{\mathrm{L}} &= \left(C_{\mathrm{v}} \frac{\mathrm{Gal}}{\mathrm{min}} \right) \left(\frac{1\,\mathrm{Bbl}}{42\,\mathrm{Gal}} \right) \left(60 \frac{\mathrm{min}}{\mathrm{h}} \right) \left(\frac{24\,\mathrm{h}}{\mathrm{Day}} \right) \\ &= 34.3 C_{\mathrm{v}} \end{aligned}$$

Assuming $\Delta P = 1$ and $\mathrm{SG} = 1$ and substituting,

$$\begin{aligned} 1 &= \left(11.5 \times 10^{-6} \right) \left[\frac{f_{\mathrm{D}} L (34.3 C_{\mathrm{v}})^2}{d^5} \right] \\ \frac{f_{\mathrm{D}} L}{d^5} &= \frac{73.9}{C_{\mathrm{v}}^2} \end{aligned}$$

and

$$C_{\mathrm{v}}^2 = \frac{73.9}{\left[\frac{f_{\mathrm{d}} L}{d} \right]}$$

where

$$d = 12D$$

Since

$$\begin{aligned} C_{\mathrm{v}} &= \frac{29.9 d^2}{\left[\frac{f_{\mathrm{D}} L}{D} \right]^{0.5}} \\ &= \frac{29.9 d^2}{(K)^{0.5}} \end{aligned}$$

Substituting into general equation for pressure drop and solving for ΔP,

$$\Delta P = \left(11.5 \times 10^{-6} \right) \left(\frac{73.9}{C_{\mathrm{v}}^2} \right) Q_{\mathrm{L}}^2 (\mathrm{SG})$$

reducing

$$\Delta P = 8.5 \times 10^{-4} \left[\frac{Q_L}{C_v}\right]^2 (SG) \tag{6.81a}$$

6.11.3 Equivalent length

The head loss associated with valves and fittings can also be calculated by considering equivalent "lengths" of pipe segments for each valve and fitting. It is often simpler to treat valves and fittings in terms of their equivalent length of pipe. The equivalent length of a valve or fitting is the length of an equivalent section of pipe that has the same frictional pressure drop as that fitting. Total pressure drop can then be determined by adding all equivalent lengths to the pipe length. The equivalent length, L_{eq}, can be determined from K_r and C_v as follows:

$$L_e = \frac{KD}{f_m} \tag{6.82}$$

Field units:

$$L_e = \frac{K_r D}{12f} \tag{6.83a}$$

SI units:

$$L_e = \frac{K_r D}{1000f} \tag{6.83b}$$

Field units:

$$L_e = \frac{74.5d^5}{fC_v^2} \tag{6.84a}$$

SI units:

$$L_e = \frac{1.108 \times 10^{-7} d^5}{fC_v^2} \tag{6.84b}$$

where

K_r = resistance coefficient, dimensionless,
D = pipe diameter (ft. (m)),
d = pipe diameter (in. (mm)),
C_v = flow coefficient (gpm (m^3/h)),

f_m = Moody friction factor, dimensionless,
L_e = equivalent length of valve or fitting under turbulent flow (ft. (m)).

For laminar flow, equivalent length can be determined from the following:

$$L_{e(\text{LAMINAR})} = \frac{\text{Re}}{1000} L_e \tag{6.86}$$

where

$L_{e(\text{LAMINAR})}$ = equivalent length to be used in pressure drop calculations (never less than actual fitting length),
L_e = equivalent length of the valve or fitting if the flow were turbulent.

Table 6.14 summarizes the equivalent lengths of various commonly used valves and fittings. Figure 6.31 shows equivalent lengths of 90° bends, and Figure 6.32 summarizes equivalent lengths of fabricated bends of different radii.

6.12 Review questions

(Questions 1-7 refer to Figures 6.33–6.36)

1. Flow stream _____ is typical of four wells each producing a 10 MMSCFD of gas.
   a. 1
   b. 2
   c. 3
   d. 5
   e. 8
2. Flow stream 14 represents _____.
   a. gas only
   b. 5400 barrels of water per day
   c. 0.84 barrels of condensate per day
   d. 0.615 gas gravity
   e. none of the above
3. How long is flow stream 6?
   a. 25 ft.
   b. 30 ft.
   c. 100 ft.
   d. 150 ft.
   e. 2640 ft.
4. What is the length of flow stream 4?
   a. 15 ft.
   b. 20 ft.
   c. 30 ft.
   d. 150 ft.
   e. 250 ft.

Table 6.14 Equivalent length of valves and fittings

Nominal pipe size in.	Globe valve of ball check valve	Angle valve	Swing check valve	Plug valve	Gate or ball valve	45° all	Short red. all	Long red. all	Branch of tee	Run of tee	90° miter bends			Enlargement					Contraction				
														Sudden			Std. red		Sudden			Std. red.	
														Equiv. L in terms of small d									
						Weld thrd	Weld thrd	Weld thrd	Weld thrd	Weld thrd	2 miter	3 miter	4 miter	d/D=1/4	d/D=1/2	d/D=3/4	d/D=1/2	d/D=3/4	d/D=1/4	d/D=1/2	d/D=3/4	d/D=1/2	d/D=3/4
1½	55	26	13	7	1	1 2	3 5	2 3	8	2 3				5	3	1	5	1	3	2	1	1	-
2	70	33	17	14	2	2 3	4 5	3 4	9	3 4				7	4	1	6	1	3	3	1	1	-
2½	80	40	20	11	2	2-	5-	3-	10	3-				8	5	2	8	2	4	3	2	2	-
									11														
3	100	50	25	17	2	2	6	4	12	4				10	6	2	10	2	5	4	2	2	-
4	130	65	32	30	3	3	7	5		5				12	8	3	14	3	6	5	3	3	-
6	200	100	48	70	4	4	11	8	14	8				18	12	4	19	4	9	7	4	4	1
									19														
8	260	125	64	120	6	6	15	9	28	9				25	16	5	24	5	12	9	5	5	2
10	330	160	80	170	7	7	18	12		12				31	20	7	28	7	15	12	6	6	2
12	400	190	95	170	9	9	22	14	37	14	28	21	20	37	24	8	-	8	18	14	7	7	-
									47														
14	450	210	105	80	10	10	26	16	55	16	32	24	22	42	26	9	-	-	20	16	8	-	2
16	500	240	120	145	11	11	29	18		18	38	27	24	47	30	10	-	-	24	18	9	-	-
18	550	280	140	160	12	12	33	20	62	20	42	30	28	53	35	11	-	-	26	20	10	-	-
									72														
20	650	300	155	210	14	14	36	23	82	23	46	33	32	60	38	13	-	-	30	23	11	-	-
22	688	335	170	225	15	15	40	25		25	52	36	34	65	42	14	-	-	32	25	12	-	-
24	750	370	185	254	16	16	44	27	90	27	56	39	36	70	46	15	-	-	35	27	13	-	-
									100														
30	-	-	-	312	21	21	55	40	110	40	70	51	44									-	
36	-	-	-		25	25	66	47		47	84	60	52									-	
42	-	-	-		30	30	77	55	140	55	98	69	64										
									170														
48	-	-	-		35	35	88	65	200	65	112	81	72										
54	-	-	-		40	40	99	70		70	126	90	80										
60					45	45	110	80	220	70													
									250														
									160														

Courtesy of GPSA Engineering Data Book.

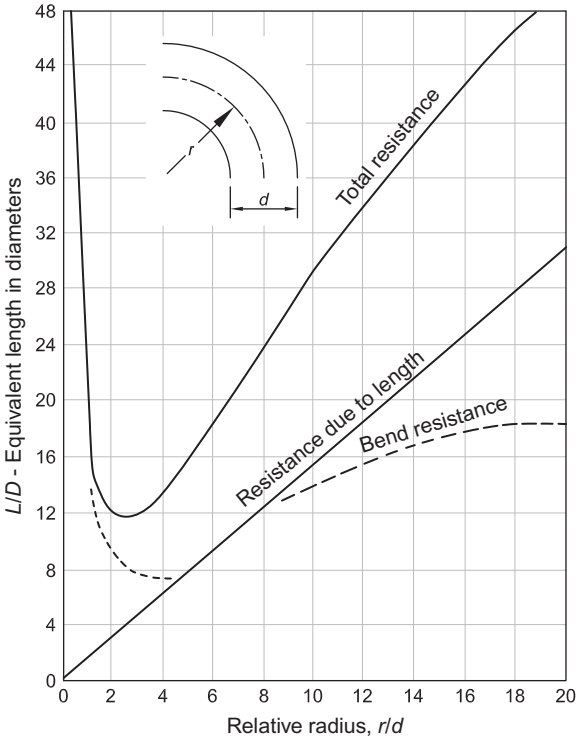

Figure 6.31 Equivalent lengths of 90° bends. Courtesy of Crane Technical Paper No. 410.

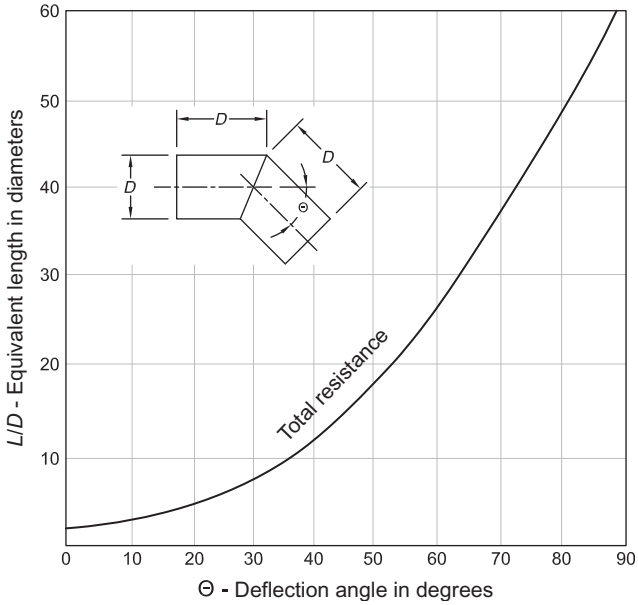

Figure 6.32 Equivalent length of miter bends. Courtesy of Crane Technical Paper No. 410.

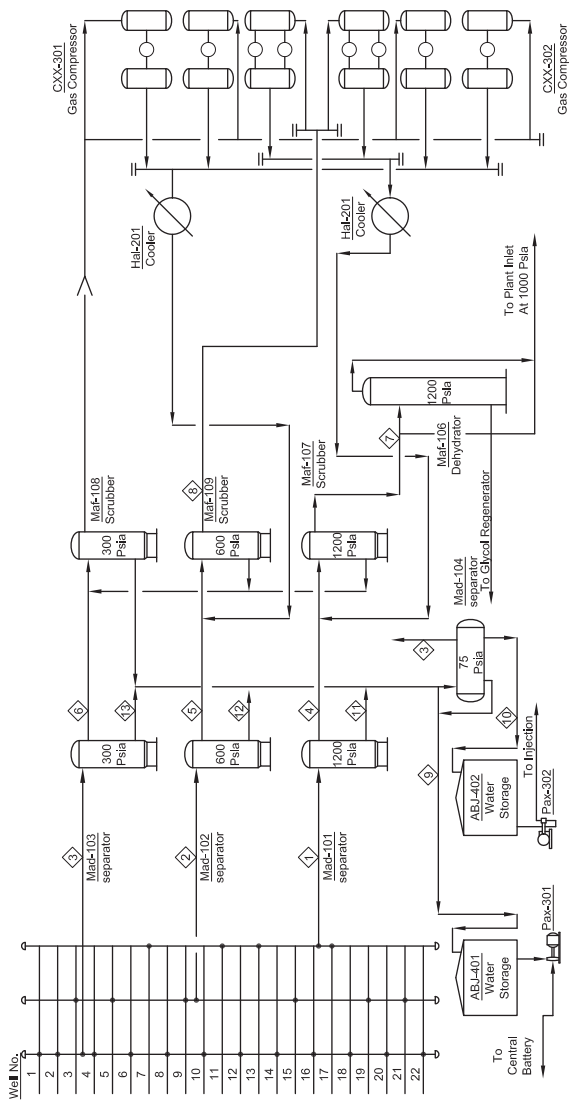

	1	2	3	4	5	6	7	8	9	10	11	12	13	14
Gas MSCF/D	40	24	30	40	24	30	100	00	-	-	-	-	-	0,04
Condensate B/D	1000	720	1000	-	-	-	-	-	2000	-	1000	720	1000	-
Water B/D	640	640	6400	-	-	-	-	-	-	7200	640	900	6400	-
Gas S.Q. (Air=1)	0,020	0,016	0,020	0,026	0,016	0,020	0,021	0,010	-	-	-	-	-	0,070
Temp.°F	80	100	110	x	108	100	110	114						70
Cond. S.Q. (Water=1.0)	0.74	0.70	0.70	-	-	-	-	-	0.02	-	0.74	0.70	0.70	-
Temp. °F	00	00	00	-	-	-	-	-	70	-	70	70	70	-
Water S.Q.	1.0	1.03	1.06	-	-	-	-	-	-	1.04	1.0	0.130	1.06	-
Temp. °F	00	00	00	-	-	-	-	-	-	70	70	70	70	-

Figure 6.33 Process flow diagram.

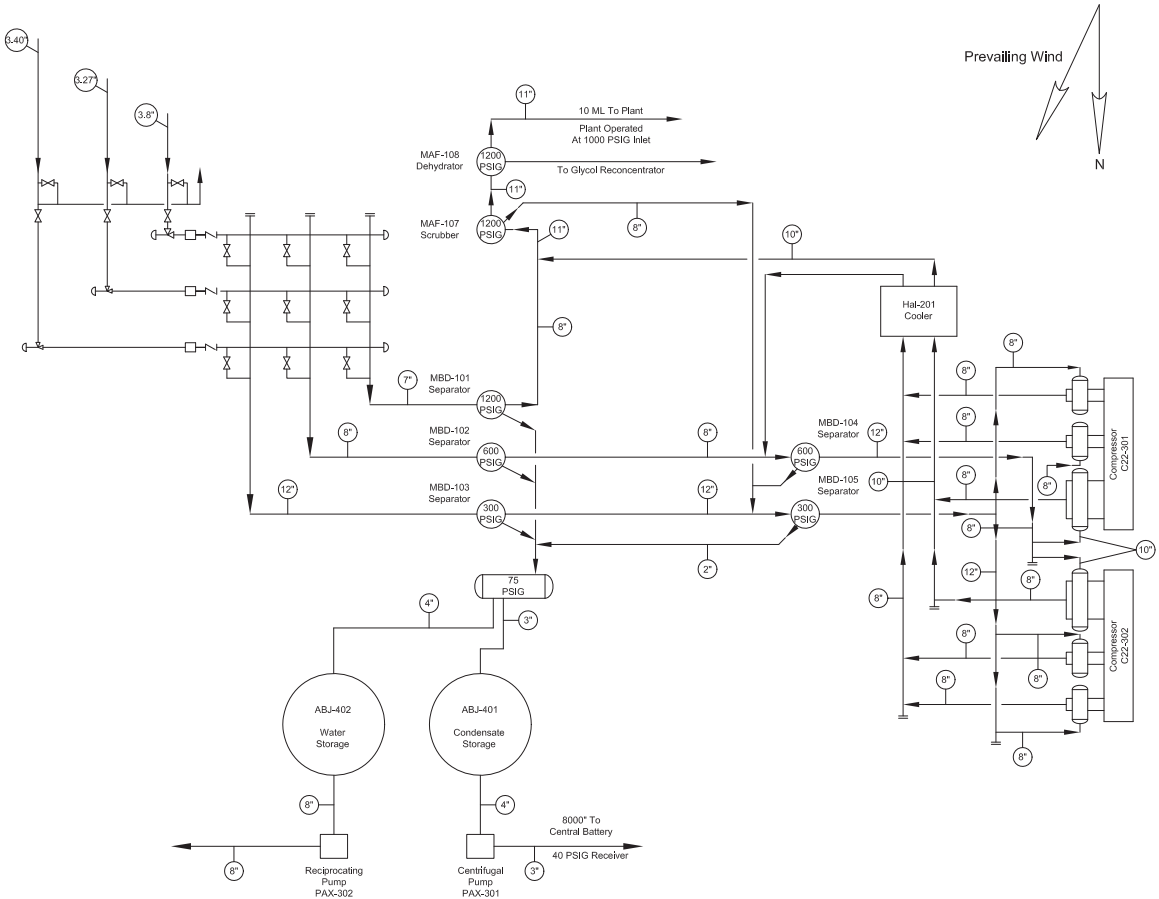

Figure 6.34 Equipment arrangement diagram (plot plan).

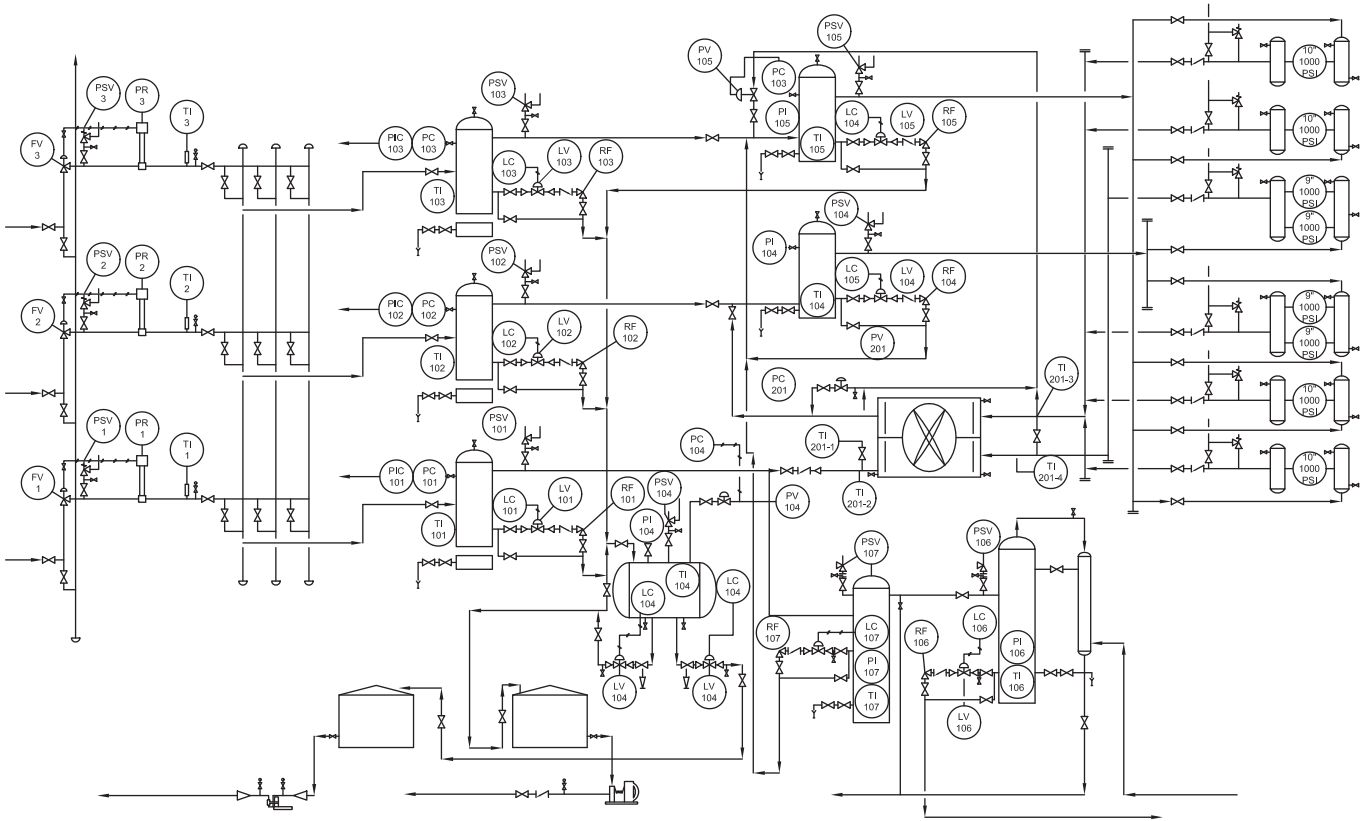

Figure 6.35 Piping and instrument diagram.

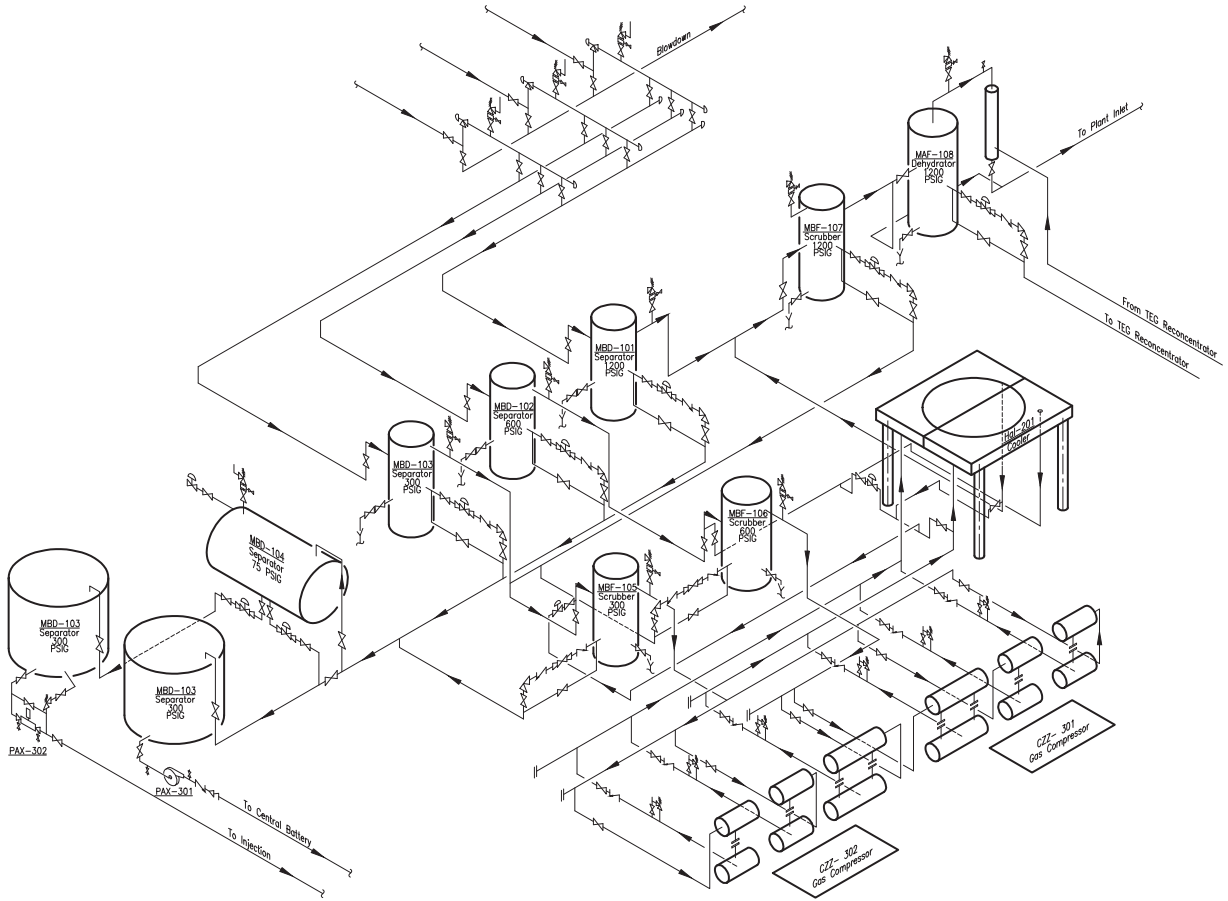

Figure 6.36 Piping and equipment isometric diagram.

5. What are the dimensions of the 300 psig separator?
   a. 3 ft. × 3 ft.
   b. 3½ ft. × 15 ft.
   c. 4 ft. × 12 ft.
   d. 4 ft. × 20 ft.
   e. 4½ ft. × 12 ft.
6. What is the maximum allowable working pressure of MBD-104?
   a. 75 psig
   b. 125 psig
   c. 300 psig
   d. 600 psig
   e. 1200 psig
7. How long is the manifold blowdown line?
   a. 20 ft.
   b. 28 ft.
   c. 100 ft.
   d. 200 ft.
   e. 450 ft.
8. A fluid's composition is necessary to predict its _____.
   a. viscosity
   b. density
   c. phase behavior
   d. all the above
   e. A and C only
9. Density is a thermodynamic property and is a function of _____, _____, and composition.
10. A fluid that is highly viscous _____.
    a. will be a gas at high temperatures
    b. has higher shear stresses
    c. is a two-phase fluid
    d. usually has a low molecular weight
    e. has a very low density
11. Flow potential _____.
    a. is the total pressure drop available
    b. has little effect on elevation pressure
    c. is a condition that affects the pipe diameter
    d. generally has to be estimated
    e. A and C only
12. Laminar flow occurs when adjacent layers of fluid move relative to each other in _____ streamlines without mixing.
13. The higher the flow rate, _____.
    a. the lower the frictional pressure drop
    b. the higher the frictional pressure drop
    c. the lower the Reynolds number
    d. A and C only
    e. B and C only
14. (True or false) For pipes connected in parallel, pressure drops are additive.
15. A spherical or cylindrical device pumped through a pipeline to improve the efficiency is called a _____.

16. A dimensionless parameter that includes the combined effects of fluid density, viscosity, velocity, and pipe diameter is the _____.
- **a.** velocity limitation constant
- **b.** flow potential factor
- **c.** the Reynolds number
- **d.** supercritical factor
- **e.** laminar number

17. Given Figures TBD-1 through TBD-4 and using the Darcy equation, what is the pipe diameter and pump discharge pressure in the condensate line? Injection velocity into the line is 5.0 ft./s, and the treating facility is 85 ft. above the pump elevation.
- **a.** 2.067 ID; 54.7 psia
- **b.** 2.900 ID; 165.3 psia
- **c.** 3.826 ID; 93.67 psia
- **d.** 6.065 ID; 275.31 psia
- **e.** 9.750 ID; 308.76 psia

18. Given the data in Question 17 and using the resistance coefficient "*K*" factor, what is the required pump discharge pressure of the line that has 15 90° bends ($f/d = 1.5$), 6 straight-way plug valves, 5 full opening gate valves, and 2 ball valves?
- **a.** 57.3 psia
- **b.** 109.8 psia
- **c.** 119.6 psia
- **d.** 142.7 psia
- **e.** 165.9 psia

19. Given the data in Question 18, what is the equivalent length of pipe for the fittings?
- **a.** 31.82 ft.
- **b.** 43.71 ft.
- **c.** 50.13 ft.
- **d.** 56.55 ft.
- **e.** 73.29 ft.

20. Given the data in Question 17 and using the Hazen-Williams equation, what will be the required pump discharge pressure for the condensate line? The pipe is clean and new.
- **a.** 54.3 psia
- **b.** 72.8 psia
- **c.** 119.3 psia
- **d.** 131.6 psia
- **e.** 145.7 psia

21. (True or false) The Darcy equation should not be used for two-phase flow calculations.

22. The Hazen-Williams equation should not be used for _____.
- **a.** viscous fluids
- **b.** laminar flows
- **c.** poor pipe conditions
- **d.** all of the above
- **e.** A and C only

23. For gas line sizes larger than 12 in. in diameter, the _____ _____ equation should not be used.
- **a.** Oliphant
- **b.** Panhandle A

c. Panhandle B
d. AGA
e. Weymouth

24. Given Figures TBD-1 through TBD-4 and using the Weymouth equation, what would be the required inside diameter of flow stream 8 if the line were 2500 ft. long? The gas is predominantly methane with an inlet pressure of 600 psig and a discharge pressure of 500 psig and a temperature of 87 °F.
a. 2.30 in.
b. 4.55 in.
c. 6.41 in.
d. 8.43 in.
e. 12.38 in.

25. Given Figures TBD-1 through TBD-4, assume that new wells have increased the flow rate of stream 7-175 MMSCFD. What will be the required pipe diameter of the line exiting the dehydrator using the Panhandle B equation? Assume that the pipeline efficiency is 0.88, average temperature is 70 °F, and average pressure is 1100 psia.
a. 12.56 in.
b. 13.11 in.
c. 15.75 in.
d. 16.81 in.
e. 20.32 in.

26. Using the Weymouth chart, what is the required pipe diameter for a gas line flowing at 50 MMSCFD? The inlet pressure is 1500 psia, the discharge pressure is 1250 psia, and the line is 10 miles long. Assume standard conditions.
a. 4.0 in.
b. 6.0 in.
c. 8.0 in.
d. 10.5 in.
e. 14.5 in.

27. Given the data in Question 26 and using the AGA equation, what is the required pipe diameter for the following conditions?
Gas viscosity $= 7.63 \times 10^{-6}$ lbm/ft. s
Average flow temp. = 87 °F
Gas gravity = 0.68
Average gas pressure = 1375 psia
Pipeline elevation change = +1 50 ft.

a. 4.37 in.
b. 6.85 in.
c. 7.12 in.
d. 8.01 in.
e. 10.38 in.

28. For a gas line for pressures less than 35 psig, _____ equation should be used.
a. Oliphant
b. Bernoulli's
c. Panhandle B
d. AGA
e. Weymouth

Further Reading

[1] M. Frankel, Facility Piping Systems Handbook, McGraw Hill, Inc., 1996, ISBN 0-07-021891-9.
[2] Pipe Fitters Handbook, Grinnell Supply Sales Company, 1966.
[3] M.L. Nayyar, Piping Handbook, McGraw-Hill, Inc., October 1, 2007, ISBN 0-07-046881-8.
[4] NAVCO Piping Datalog, National Valve and Manufacturing Company, Pittsburgh, PA.
[5] E. Avallone, T. Baumeister, Marks' Standard Handbook for Mechanical Engineers, McGraw-Hill, ISBN 0-07-004123-7.
[6] Codes and Standards Training Institute (CASTI), ASME Piping Codes.
[7] ASME B31.1, Standard for Power Piping, ASME, New York City, 2012.
[8] ASME B31.3, Standard for Process Piping, ASME, New York City, 2012.
[9] ASME B31.4, Standard for Liquid Transportation Systems for Hydrocarbons, Liquid Petroleum Gas, Anhydrous Ammonia and Alcohols, ASME, New York City, 2012.
[10] ASME B31.8, Standard for Gas Transmission and Distribution Piping Systems, ASME, New York City, 2012.
[11] API RP 14E, Recommended Practice for the Design and Installation of Offshore Production Platform Systems, API, Washington, DC, 2007.
[12] ASME B16.5, Standard for Steel Pipe Flanges and Flanged Fittings NPS ½ Through NPS 24 Metric/Inch, ASME, New York City, 2003.
[13] API Specification 6A, Specification for Wellhead and Christmas Tree Equipment, 19th ed., API, Washington, DC, 2004.
[14] ASME B16.11, Standard for Forged Steel Fittings, Socket Welding, and Threaded, ASME, New York City, 2012.
[15] NACE MR-01-75, Standard Material Requirements—Metals for Sulfide Stress Cracking and Stress Corrosion Cracking Resistance in Sour Gas Oilfield Equipment for Sulfide Stress Cracking Resistant Metallic Material for Oilfield Equipment, NACE, Houston, 2012. Sections 3 and 5.
[16] The 2013 ASME Boiler and Pressure Vessel Code, Section VIII, IX, ASME, Fairfield, New Jersey, 2013.
[17] ASME SPEC 6F, Technical Report on Performance of API and ASME End Connections in a Fire Test According to API Specification 6A, third ed., API, Washington, DC, 2012.
[18] ASME SPEC 6FA, Specification for Fire Testing Valves, third ed., API, Washington, DC, 1999.
[19] API RP 14J, Recommended Practice for Design and Hazard Analysis of Offshore Production Facilities, second ed., API, Washington, DC, 2001.
[20] API RP 14C, Recommended Practice for Analysis, Design, Installation, and Testing of basic Surface Safety Systems for Offshore Production Facilities, seventh ed., API, Washington, DC, 2001.
[21] ASME Standard A53, Standard for Seamless Carbon Steel Pipe for High Temperature Service, ASME, New York City, 2002.
[22] ASME Standard A106, Standard for Seamless Carbon Steel Pipe for High Temperature Service, ASME, New York City, 2002.
[23] API Standard 5L, Specification for Line Pipe, 19th ed., API, Washington, DC, 2004.
[24] ASME Standard B16.9, Standard for Factory Made Wrought Steel Butt-Welding Fittings, ASME, New York City, 2013.
[25] ASME Standard A105, Standard for Carbon Steel Forgings for Piping Applications, ASME, New York City, 2012.

[26] ASME Standard A234, Standard Specification for Pipe Fittings of Wrought Iron Carbon Steel and Alloy Steel for Moderate and Elevated Temperatures, ASME, New York City, 2012.
[27] ASME Standard A420, Standard Specification for Pipe Fittings of Wrought Carbon Steel and Alloy Steel for Low Temperature Service, ASME, New York City, 2012.
[28] ASME Standard A694, Carbon and Alloy Steel for Pipe Flanges, Fittings, Valves and Parts for High Pressure transmission services, ASME, New York City, 1998.
[29] API Standard 6D, Standard Specification for Steel Gate, Plug and Check Valves for Pipeline Service, API, Washington, DC, 1998.
[30] API Standard 6H, Standard Specification on End Closures, Connectors, and Swivels, API, Washington, DC, 1998.
[31] MSS Specification 44, Specification for Steel Pipeline Flanges, Manufacturer's Standardization Society of the Valves and Fittings Industry Inc, Vienna, Virginia, 1998.
[32] MSS Specification 75, Specification for High Test Wrought Butt Welding Fittings, Manufacturer's Standardization Society of the Valves and Fittings Industry Inc, Vienna, Virginia, 1998.
[33] NACE Standard MR01-76, Standard Specification for Metallic Materials for Sucker Rod Pumps for Corrosive Oilfield Environments, NACE, Houston, 2000.
[34] NACE RP 200, Recommended Practice for Steel Cased Pipeline Practices, NACE, Houston, 2003.
[35] NACE RP 572, Recommended Practice for Design, Installation, Operation, and Maintenance of Impressed Current Deep Ground Beds, NACE, Houston, 2003. Sections 3 and 5.
[36] API Standard 1104, Standard Specification for Welding of Pipelines and Related Facilities, 19th ed., API, Washington, DC, 1999.
[37] API Standard 571, Standard Specification for Piping Code-Inspection, Repair, Alteration and Re-Rating of In-Service Piping Systems, second ed., API, Washington, DC, 1999.
[38] API Standard 574, Standard Specification for Inspection Practices for Piping System Components, second ed., API, Washington, DC, 1999.
[39] B. Wilson, Detail Engineering and Layout of Piping Systems, second ed., 2010, ISBN 928-1-926633-18-3.
[40] A. Parisher Roy, A. Rhea Bobert, Pipe Drafting and Design, 3rd ed., Gulf Professional Publishing, Houston, TX, 2012.
[41] C. Becht IV, Process Piping: The Complete Guide to ASME B31.3, third ed., ASME Press, New York, 2009.
[42] D.R. Sherwood, J. Whistance Dennis, The Piping Guide, Syentek Book Company, San Francisco, CA, 1991.
[43] Piping Engineering, Tube Turns Inc., 6th ed., 1986.
[44] L.C. Peng, T.-L. Peng, Pipe Stress Engineering, ASME Press, New York, 2009.
[45] B. Silowash, Piping Systems Manual, McGraw Hill, 2010.
[46] Control Valve Handbook, Fisher-Rosemount, 1999.
[47] K.E. Arnold, M.I. Stewart, Surface production operations, in: Design of Gas-Handling Systems and Facilities, vol. 2, Elsevier, Houston, TX, 1999. Chapter 13-Pressure Relief.
[48] K.E. Arnold, M.I. Stewart, Petroleum Engineering Handbook, in: Facilities and Construction Engineering, vol. III, Society of Petroleum Engineers, Houston, TX, 2007. Chapter 10-Safety Systems.

Choosing a line size and wall thickness

7

7.1 Choosing a line size

7.1.1 General considerations

The fluid flow equations presented in Chapter 6 enable the engineer to initiate the design of a piping or pipeline system, where the pressure drop available governs the selection of the pipe size. When choosing a line size, it is necessary to evaluate both pressure drop and flow velocity for expected maximum and minimum flow rates anticipated during the life of the facility. It is usually advisable to add surge factors to the expected flow rates to ensure there is sufficient pressure available to force the fluid through the piping system. Surges can be a function of line length and elevation changes. Table 7.1, based on data originally included in API RP 14E, presents some typical surge factors that may be used if more definite information is not available.

The line diameter must be large enough so that the available pressure is sufficient to drive the fluid through the line from point 1 to point 2. Therefore, it's important the operating pressures at the various points of the facility must be known. In most cases, the pressure drop is not the governing criterion in production facility piping system design since most of the pressure drop occurs across control valves. The pressure drop in the line is relatively small compared with the pressure available in the system.

Consideration should also be given to maximum and minimum velocities. The line should be sized such that the maximum velocity of the fluid does not cause erosion, excess noise, or water hammer. The line should be sized such that the minimum velocity of the fluid prevents surging and keeps the line swept clear of entrained solids and liquids.

7.1.2 Erosional velocity

Fluid erosion occurs when liquid droplets impact the pipe wall with enough force to erode either the base metal itself or the products of corrosion, that is, erosion corrosion. As the fluid velocity increases, the tendency for erosion to occur also increases. The following equation can be used where no specific information as to the erosive/corrosive properties of the fluid is available:

Field units:

$$V_e = 1.22\frac{C_e}{(\rho)^{\frac{1}{2}}} \tag{7.1a}$$

Surface Production Operations. http://dx.doi.org/10.1016/B978-1-85617-808-2.00007-9
Copyright © 2016 Elsevier Inc. All rights reserved.

Table 7.1 Typical surge factors

Service	Surge factor (%)
Facility handling primary production	20
Facility handling primary production from wells not located adjacent to the facility	30
Facility handling primary production from wells not located adjacent to the facility where there are large elevation changes	40
Facility handling gas-lifted production	50

(Courtesy of API RP 14E)

SI units:

$$V_e = \frac{C_e}{(\rho)^{\frac{1}{2}}} \tag{7.1b}$$

where

V_e = erosional flow velocity (ft./s (m^3/s)),
ρ = density of liquid (lb/ft.^{3} (kg/m^3)),
C_e = empirical constant, dimensionless.

7.1.2.1 Discussion concerning the empirical constant "C"

Various values have been used and proposed for "*C*." Equation 7.1 was first published in API RP 14E in the mid-1980s, and a value of 100 was recommended for continuous service and 125 for noncontinuous service. Analysis of field data indicates that constants higher than 100 can be used if corrosion is controlled. With the increase in high pressure and high flow rate wells, the equation produced very conservative results. Therefore, Southwest Research Institute (SwRI) was commissioned by the American Petroleum Institute (API) and the former Minerals Management Service (MMS) to evaluate the validity of Equation 7.1.

7.1.2.2 Conclusions of Southwest Research Institute study

The conclusions of the SwRI study resulted in the revision of *API RP 14E* in 1990. *API RP 14E* revision included the following wording: "Industry experience to date indicates that for solids-free fluids, values of $C = 100$ for continuous service and $C = 125$ for intermittent service are conservative. For solids-free fluids where corrosion is not anticipated or when corrosion is controlled by inhibition or by employing corrosion-resistant alloys, values of $C = 150$-200 may be used for continuous service; values up to 250 have been used successfully for intermittent service. If solids production is anticipated, fluid velocities should be significantly reduced. Different values of *C* may be used where specific application studies have shown them to be appropriate."

"Where solids and/or corrosive contaminants are present or where C values higher than 100 for continuous service are used, periodic surveys to assess pipe wall thickness should be considered. The design of any piping system where solids are anticipated should consider the installation of sand probes, cushion flow tees, and a minimum of three feet of straight piping downstream of choke outlets."

7.1.2.3 Erosion from solid particle impingement

Erosion of the pipe material itself can occur if solids are present in the fluid. There is no minimum velocity below, in which this erosion will not occur. One equation proposed to evaluate the erosion of metal is

Field units:

$$\text{vol} = \frac{12KW\left(V_{\text{p}}\right)^2\beta}{gP_{\text{h}}} \tag{7.2a}$$

SI units:

$$\text{vol} = 9.806 \times 10^{-3}\frac{KW\left(V_{\text{p}}\right)^2\beta}{gP_{\text{h}}} \tag{7.2b}$$

where

vol = volume of metal eroded (in.^{3} (mm^3)),
V_{p} = particle velocity (ft./s (m/s)),
P_{h} = penetration hardness of the material (psi (kPa)),
β = a value between 0.5 and 1.0 depending upon the impingement angle of the particle,
K = erosive wear coefficient, dimensionless,
W = total weight of impinging solid particles (lbs (kg)),
g = acceleration of gravity (32.2 ft./s^2 (9.81 m/s^2)).

The form of this equation indicates that there is no threshold below which erosion does not occur. Instead, erosion can occur even at small velocities, and the amount of erosion increases with the square of the velocity. It can be seen from Equation 7.2 that the velocity for a given erosion rate is a function of $1/W$. Since the percent of solids impinging on any surface is inversely proportional to the density of the fluid, the erosional velocity can be expected to be proportional to the fluid density. This is contrary to the form of Equation 7.1. Thus, it is not correct to use Equation 7.1 with low "C" value when solids are present.

The rate of erosion depends on both the concentration of solids in the flow stream and the way in which these particles impinge on the wall. At an ell, one would expect centrifugal force to cause a high percentage of the particles to impinge on the wall in a concentrated area. It can be shown that with a solids concentration of 10 lbs/month (4.5 kg/month) in the flow stream, the velocity for a 10 miles/year (0.25 mm/year) erosion rate in an ell can be as low as 5 ft./s (1.5 m/s). At higher concentrations, the erosional velocity would be even lower. For this reason, where sand production is

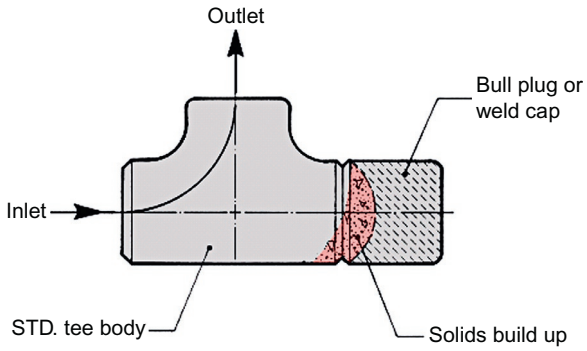

Figure 7.1 Typical target tee.

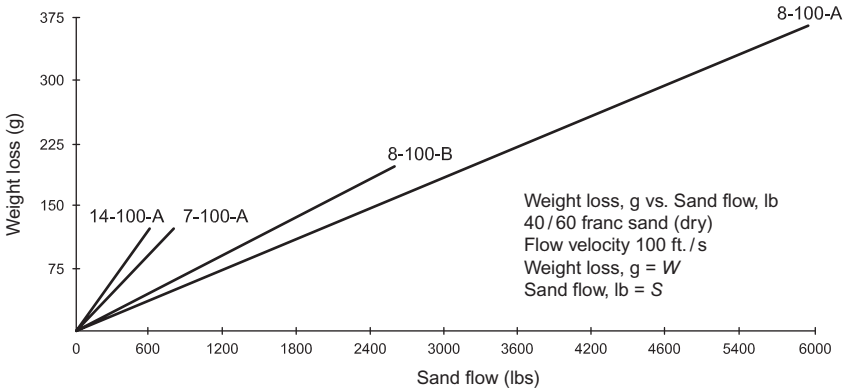

Run	Sand flow, lb/min	Wear rate	Fitting	Service life, lb sand
14-100-A	3.11	$W = 0.140\ S$	Water e11	785
7-100-A	3.04	$W = 0.138\ S$	Field e11	800
8-100-B	3.00	$W = 0.073\ S$	Bullplugged water tee	2600
8-100-A	2.95	$W = 0.061\ S$	Bullplugged field tee	6000

Figure 7.2 Wear rate comparison for standard fittings.
Source: API OSAPR Project 2.

anticipated, it is usually recommended that right-angle turns in the pipe be accomplished with very long-radius fabricated bends or target tees. Figure 7.1 illustrates a target tee and Figure 7.2 shows the greater life that can be expected by the use of a target tee in lieu of a long-radius ell. Where sand production is expected, piping should be inspected periodically for loss of wall thickness at the outside of all direction changes.

7.1.3 Liquid line sizing

When sizing a liquid line, the two factors that have the greatest effect are the pressure drop in the pipe and the velocity of the fluid.

7.1.3.1 Pressure drop

When determining the pressure drop, it is necessary to take into account the equivalent lengths of valves and fittings, as well as elevation changes. If a throttling dump valve is in the line, the pressure drop in the line should be limited to less than 70% of the total available at twice the average flow. Pressure drop normally doesn't govern in single-phase liquid lines within a surface production facility.

7.1.3.2 Velocity

7.1.3.2.1 Maximum velocity

Maximum velocity: The maximum velocity is used in sizing liquid lines and depends on service conditions, pipe materials, and economics. For example, *API RP14E* recommends that the maximum velocity not exceed 15 ft./s (4.5 m/s). Most companies specify the following maximum velocities:

- Cement-lined pipe: 8-10 ft./s (2.4-3.0 m/s)
- Fiberglass pipe: 12-15 ft./s (3.7-4.5 m/s)
- Where erosion corrosion is a problem: 10-15 ft./s (3.0-4.5 m/s)

Even lower maximum velocities may be used for cement-lined pipe, where erosion corrosion is anticipated, or in water injection lines.

7.1.3.2.2 Minimum velocity

Minimum velocity: The minimum velocity used in sizing liquid lines usually is based on maintaining a velocity sufficient to keep solid particles from depositing in the line. If sand is transported in a line, it is deposited on the bottom until an equilibrium flow velocity over the bed is reached. At this point, sand grains are being eroded from the bed at the same rate as they are being deposited. If the flow rate is increased, the bed will be eroded until a new equilibrium velocity is reached and the bed is once again stabilized. If the flow rate is decreased, sand is deposited until a new equilibrium velocity is established. In most practical cases, a velocity of 3-4 ft./s (0.9-1.2 m/s) is sufficient to keep from building a sufficiently high bed to affect pressure drop calculations. Thus, a minimum velocity of 3 ft./s (0.9 m/s) is normally recommended.

Figure 7.3 can be used to determine the liquid velocity in various pipe sizes. Liquid velocity can be determined from the following:

Field units:

$$V = 0.012\frac{Q_1}{d^2} \tag{7.3a}$$

SI units:

$$V = 353.68\frac{Q_1}{d^2} \tag{7.3b}$$

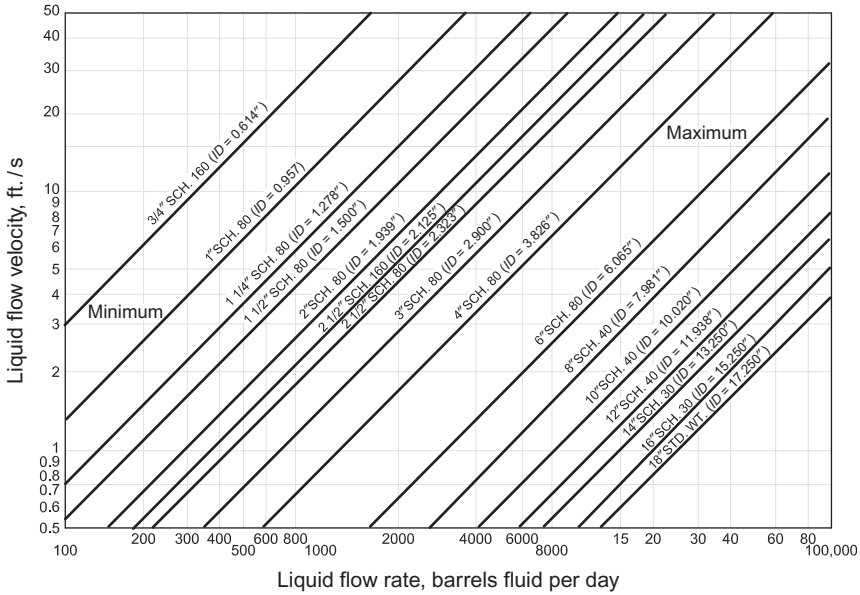

Figure 7.3 Liquid flow velocity as a function of liquid flow rate for different pipe sizes. (Courtesy of API RP 14E)

where

V = average velocity (ft./s (m/s)),
Q_l = liquid flow rate (BPD (m^3/h)),
d = pipe inside diameter (in. (mm)).

Derivation of Equation 7.3a (field units):

Converting velocity into "oil field" units,

$$V = \frac{Q}{A}$$

and

$$A = \frac{\pi d^2}{(4)(144)}$$

$$Q = Q_L\left(\frac{5.61}{(24)(3600)}\right)$$

substituting

$$V = 0.012\frac{Q_l}{d^2} \tag{7.3a}$$

where

V = fluid velocity (ft./s),
Q_L = liquid flow rate (BPD),
Q = liquid flow rate (ft.^{3}/s),
A = pipe cross-sectional area (ft.^{2}),
d = pipe inside diameter (in.).

7.1.4 Gas line sizing

As with liquid line sizing, the two factors that have a pronounced effect on gas line size are the pressure drop and the velocity of the gas. The pressure drop in gas lines is typically low in gas-producing facilities because the piping segment lengths are short. The pressure drop has a more significant impact upon longer segments such as gas-gathering pipelines, transmission pipelines, or relief or vent piping.

7.1.4.1 Pressure drop

The pressure drop is usually the governing factor in long gas-gathering and transmission systems or in relief/vent piping. The pressure drop also may be important where it necessitates increased compressor horsepower. In a typical production facility, the gas lines are short and the pressure drop does not govern sizing. In some facilities, the pressure lost due to friction must be recovered by recompressing the gas. In such cases, it is possible to strike an economic balance between the cost of a larger pipe to minimize the pressure drop and the cost of additional compression. Figure 7.4 is an approximation that attempts to strike this balance by showing acceptable pressure drop versus operating pressure. In most production facility lines, Figure 7.4 has little significance since the bulk of the pressure loss is due to a pressure control valve, and the size and operating pressure of the compressor are not affected by the incremental pressure drop in the line. Equation 7.4 and Figure 7.4 can be used to use a pipe diameter directly. Equation 7.4 is given as

Field units:

$$d^5 = \frac{1260 STfQ_g^2}{P(\Delta P/100\,\text{ft.})} \tag{7.4a}$$

SI units:

$$d^5 = 8.186 \times 10^5 \frac{STfQ_g^2}{P(\Delta P/100\,\text{ft.})} \tag{7.4b}$$

where

d = pipe inside diameter (in. (mm)),
S = specific gravity of gas relative to air,

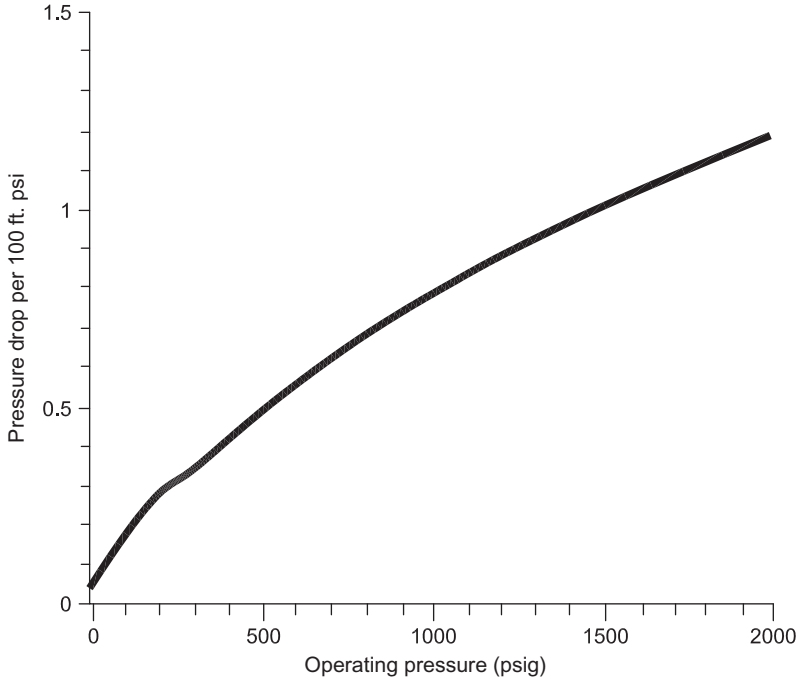

Figure 7.4 Acceptable pressure drop for short lines.
(Courtesy of Paragon Engineering Service)

T = temperature (°R (°K)),
f_m = Moody friction factor, dimensionless,
Q_g = gas flow rate (MMSCFD (m^3/h)),
P = pressure (psia (kPa)),
ΔP/100 ft. = desired pressure drop per 100 ft. (psi (kPa)).

7.1.4.2 Velocity

7.1.4.2.1 Maximum velocity

Maximum velocity: The gas velocity should be kept below 60-80 ft./s (18-24 m/s) so as to minimize noise and to allow for corrosion inhibition. In systems with CO_2 present in amounts as low as 1-2%, many operators limit the velocity to less than 30-50 ft./s (9-15 m/s). Field experience indicates that it is difficult to inhibit to inhibit CO_2 corrosion at higher velocities.

7.1.4.2.2 Minimum velocity

Minimum velocity: A minimum velocity of 10-15 ft./s (3-4.5 ft./s) is recommended to minimize liquid settling out in low spots.

7.1.4.2.3 Erosional velocity

Erosional velocity: Although the erosional criteria were derived for two-phase flow, it should be verified that these criteria are still met as the liquid flow rate approaches zero. Erosional velocity due to small amounts of liquid in the gas can be calculated from Equation 7.5:

Field units:

$$V_e = 0.6\ C_e \left[\frac{TZ}{SP}\right]^{\frac{1}{2}} \tag{7.5a}$$

SI units:

$$V_e = 0.644\ C_e \left[\frac{TZ}{SP}\right]^{\frac{1}{2}} \tag{7.5b}$$

where

V_e = erosional velocity (ft./s (m/s)),
C_e = empirical constant, dimensionless,
T = temperature (°R (°K)),
S = specific gravity of gas relative to air,
P = pressure (psi (kPa)),
Z = gas compressibility factor.

For most instances, with pressures less than 1000-2000 psi (7000-14,000 kPa), the erosional velocity will be greater than 60 ft./s (18 m/s), and thus, the erosional criteria will not govern. At high pressures, it may be necessary to check for erosional velocity before sizing lines for 60 ft./s (18 m/s) maximum velocity.

Gas velocity can be determined from Equation 7.6:

Field units:

$$V_e = 60\frac{Q_g}{d^2}\frac{TZ}{P} \tag{7.6a}$$

SI units:

$$V_g = 122.7\frac{Q_g}{d^2}\frac{TZ}{P} \tag{7.6b}$$

where

Q_g = gas flow rate (MMSCFD (std m^3/h)),
T = temperature (°R (°K)),
d = pipe inside diameter (in. (mm)),
P = pressure (psia (kPa)),
V_g = gas velocity (ft./s (m/s)),
Z = gas compressibility factor.

Derivation of Equation 7.6 (field units):

Converting velocity into "oil field" units,

$$V = \frac{Q}{A}$$

and

$$A = \frac{\pi d^2}{(4)(144)}$$

$$Q = Q_g \left(\frac{1 \times 10^6 \text{SCF}}{\text{MMSCF}}\right)\left(\frac{\text{day}}{24\text{h}}\right)\left(\frac{h}{3600s}\right)\left(\frac{14.7}{P}\right)\left(\frac{TZ}{520}\right)$$

substituting

$$V = \frac{60 Q_g}{d^2}\frac{TZ}{P} \tag{7.6a}$$

where

Q_g = gas flow rate (MMSCFD),
Q = gas flow rate (ft.^{3}/s),
A = pipe cross-sectional area (ft.^{2}),
V = gas velocity (ft./s),
Z = gas compressibility factor, dimensionless,
P = pressure (psia),
T = temperature (°R),
d = pipe inside diameter (in.).

7.1.5 Two-phase flow line sizing

Flow lines from wells, production manifolds, and two-phase gas/liquid pipelines are sized as two-phase lines. Gas outlets from separators or other process equipment contain small amounts of liquids but are not considered two-phase lines. Liquid outlets from separators or other process equipment are usually considered single-phase liquid lines, even though gas evolves due to both the pressure decrease across a liquid control valve and the pressure loss in the line. The amount of gas evolved in liquid outlet lines rarely will be sufficient to affect a pressure loss calculation based on an assumption of liquid flow. A relatively large pressure drop is needed to evolve enough gas to affect this calculation.

7.1.5.1 Pressure drop

Since most two-phase lines operate at high pressure within the facility, pressure drop usually is not a governing criterion in selecting a diameter. However, pressure drop may have to be considered in some long lines from wells and in most two-phase gas/liquid pipelines.

7.1.5.2 Velocity

7.1.5.2.1 Minimum velocity

Minimum velocity: A minimum velocity of 10-15 ft./s (3-4.5 m/s) is recommended so as to keep liquids moving in the line and to minimize slugging of separator or other process equipment. This is very important in long lines with elevation changes.

7.1.5.2.2 Maximum velocity

Maximum velocity: The maximum velocity is equal to 60 ft./s (18 m/s) for noise and 30-50 ft./s (9-15 m/s) if it is necessary to inhibit for CO_2 corrosion or the erosional velocity, whichever is least.

7.1.5.2.3 Erosional velocity

Erosional velocity: In two-phase flow, it is impossible that liquid droplets in the flow stream will impact on the wall of the pipe causing erosion of the products of erosion. This is called erosion corrosion. Erosion of the pipe wall itself could occur if solid particles, particularly sand, are entrained in the flow stream. The following guidelines from API RP 14E should be used to protect against erosion corrosion. Erosional velocity usually governs the sizing of two-phase flow lines. The general erosional velocity is expressed as

Field units:

$$V_e = \frac{C_e}{(\rho_m)^{\frac{1}{2}}} \tag{7.7a}$$

SI units:

$$V_e = 1.22\frac{C_e}{(\rho_m)^{\frac{1}{2}}} \tag{7.7b}$$

where

V_e = erosional flow velocity (ft./s (m/s)),
C = empirical constant, dimensionless,
ρ_m = mixture density (lb/ft.^{3} (kg/m^3)).

It can be shown that the minimum cross-sectional area of pipe for a maximum allowable velocity can be expressed as

Field units:

$$a = \left[\frac{9.35 + \dfrac{ZRT}{21.25P}}{1000V_{max}}\right] Q_1 \tag{7.8a}$$

SI units:

$$a = 29.69\left[\frac{9.35 + 3.24\dfrac{ZRT}{P}}{V_{\max}}\right]Q_1 \tag{7.8b}$$

where

a = minimum required cross-sectional area (in.^{2} (mm^2)),
Q_l = liquid flow rate (BPD (m^3/h)),
$V_{\max}$ = maximum allowable velocity (ft./s (m/s)),
Z = gas compressibility factor,
R = gas/liquid ratio (std ft.^{3}/bbl (std m^3/m^3)),
P = pressure (psi (kPa)),
T = temperature (^{o}R (°K)).

Equation 7.8 can be rearranged and solved for pipe inside diameter:
Field units:

$$d = \left[\frac{\left[11.9 + \dfrac{ZRT}{16.7P}\right]Q_1}{1000V_{\max}}\right]^{\frac{1}{2}} \tag{7.9a}$$

SI units:

$$d = 5.448\left[\frac{\left[11.9 + 4.13\dfrac{ZRT}{16.7P}\right]Q_1}{V_{\max}}\right]^{\frac{1}{2}} \tag{7.9b}$$

Figure 7.5 is a chart developed to minimize the calculation procedure. One must be careful when using this chart as it is based on the assumptions listed in the chart. It is better to use Equations 7.7 and 7.9 directly as follows:

(1) Determine $\rho_{m.}$
(2) Determine the erosional velocity, V_e, from Equation 7.7.
(3) For the design, use the smaller of V_e or that velocity required by the noise or CO_2 inhibition criteria.
(4) Determine the minimum ID from Equation 7.9.
(5) Check pressure drop, if applicable, to make certain there is enough driving force available.

Derivation of Equations 7.8a and 7.9a (field units)

From previous derivations,

$$A = \frac{Q}{V} \quad \text{and} \quad A = \frac{a}{144}$$

and

$$Q = \left(6.49 \times 10^{-5}\right)Q_L + 0.327\left(\frac{Q_g TZ}{P}\right)$$

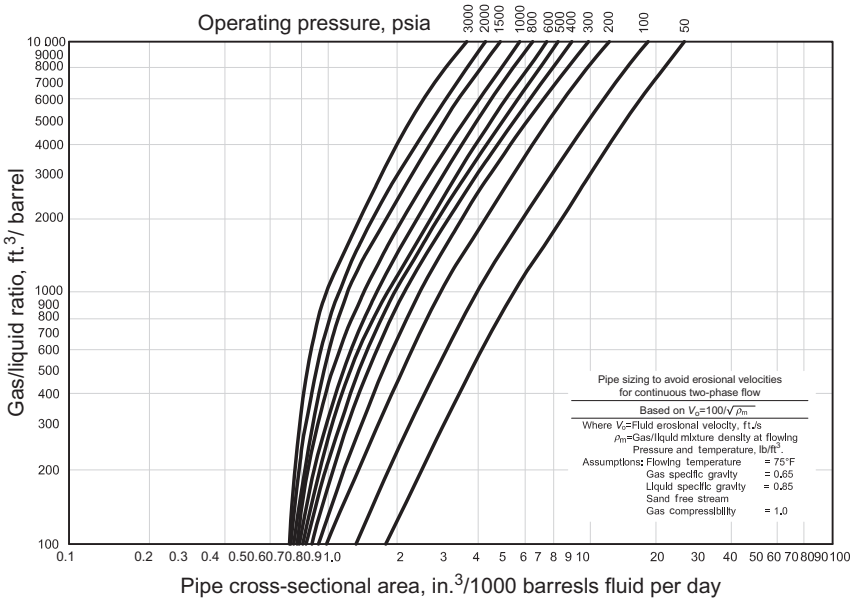

Figure 7.5 Gas/liquid ratio as a function of pipe cross-sectional area for different operating pressures.

$$R = \frac{1 \times 10^6 Q_g}{Q_L}$$

substituting

$$A = \frac{6.49 \times 10^{-5} Q_L + 0.327\left(\dfrac{RTZQ_L}{10^6}\right)}{V}$$

Substituting and factoring out Q_L, then multiply top and bottom by 1000:

$$a = \left[\frac{9.35 + \dfrac{ZRT}{21.25P}}{1000V_{max}}\right] Q_1 \tag{7.8a}$$

Substituting $a = \pi d^2/4$ and solving for pipe inside diameter,

$$d = \left[\frac{\left[11.9 + \dfrac{ZRT}{16.7P}\right] Q_1}{1000V_{max}}\right]^{\frac{1}{2}} \tag{7.9a}$$

7.2 Determining wall thickness

7.2.1 Standards and requirements

After selecting the appropriate inside diameter, it is necessary to choose a pipe with sufficient wall thickness to withstand both the internal burst pressure and the external collapse resistance.

There are different codes and standards used throughout the world in calculating the required wall thickness of a pipe. For simplicity, we will discuss only the ASME Pressure Piping and ASME Boiler and Pressure Vessel Codes in this chapter. There are numerous other authorities for designing and construction oil and gas production facilities and pipeline systems, for example, ISO 13623 and 15649, API 1111, DNV, and ABS. The engineer should check to determine if different codes or standards must be applied in the specific location of the design. The following is a list of the most commonly used piping standards used in production facilities and pipelines and that are similar to other national standards, which exist in other parts of the world.

7.2.1.1 ASME B31.1: Power piping

This standard deals with steam, power fluids, and geothermal piping. It is required by the US Coast Guard on all mobile offshore drilling units.

7.2.1.2 ASME B31.3: Process piping

This standard is required by most authorities having jurisdiction (BESE, MlGAS, Pertamina, PETRONAS, Petroleum Authority of Thailand, DOE, NNPC, Sonangol, etc.) for both onshore and offshore production facilities in all parts of the world.

7.2.1.3 ASME B31.4: Pipeline transportation systems for liquid hydrocarbons and other liquids

This standard is normally used in onshore oil production facilities and all hydrocarbon and water pipelines.

7.2.1.4 ASME B31.8: Gas transmission and distribution piping systems

This standard is normally used for gas lines in onshore production facilities and for the transport or distribution of gas. This standard is also used for flow lines. In general, the US Department of Transportation has adopted this standard for gas pipelines, although it has modified some sections.

ASME B31.1 and ASME B 31.3 use the same equation to calculate the required wall thickness, although the allowable material stress at elevated temperatures differs between the two codes. ASME B31.4 is actually a subset of ASME B31.8 as it relates to calculating wall thickness. Thus, from a wall thickness standpoint, only ASME B31.3 and ASME B31.8 are in common use. In general, but not always, ASME B31.3 is more conservative in calculating the required wall thickness.

7.2.2 ASME pipe schedules

Pipe comes in standard diameter and wall thickness values. Table 7.2 lists ASME standard pipe schedules. Pipe is designated by nominal size, which is usually different from the actual pipe outside diameter. Pipe wall thickness can be given by actual thickness, weight per foot, schedule, or class. The most commonly available pipe wall thicknesses are standard, XH and XXH. Wall thickness corresponding to different schedules are the next most commonly available.

7.2.3 General hoop stress formula

Once the inside diameter (ID) of the piping segment has been determined, the pipe wall thickness can be calculated. There are many factors that affect the required pipe wall thickness, which include the maximum allowable working and operating pressures, maximum and operating temperatures, chemical properties of the fluid, fluid velocity, pipe material and grade, and required code safety factors. The engineer must verify whether the particular country in which the project is located has specific regulations, codes, and standards that apply to facilities and/or pipelines.

Before one discusses the determination of pipe wall thickness in accordance with the ASME codes, it is necessary to introduce the concept of hoop stress, which is the basis of all code equations. Figure 7.6 is an equilibrium diagram of a length of pipe that was cut in half.

The hoop stress "σ" in the pipe, a tensile (positive) stress caused by pressure trying to tear the pipe apart, is considered a uniform stress over the thickness of the wall, for a thin-wall cylinder. Therefore, the force equilibrium equation can be expresses as

$$2\sigma tL = P(d_o - 2t)L \tag{7.10}$$

where

σ = hoop stress in pipe wall (psi (kPa)),
t = pipe wall thickness (in. (mm)),
P = internal design pressure (psig (kPa)),
d_o = pipe outside diameter (in. (mm)),
L = pipe length (ft. (m)).

Rearranging and solving for required thickness ("t"), the equation reduces to

$$t = \frac{Pd_o}{2(\sigma + P)} \tag{7.11}$$

7.2.4 Pipe wall thickness equation: ASME B31.3

ASME B31.3 is a very stringent code with a high safety margin. The pipe wall thickness equation takes the form

$$t = \left[t_c + t_{th} + \left(\frac{Pd_o}{2(SE + PY)} \right) \left(\frac{100}{(100 - \mathrm{Tol})} \right) \right] \tag{7.12}$$

Table 7.2 **ASME pipe schedule**

Nominal pipe size	OD	Wall thickness	Weight/ft.	Schedule	Class
(1 of 2)					
3/4 in.	1.050	0.113	1.131	40	STD
		0.154	1.474	80	XH
		0.218	1.937	160	
		0.308	2.441		XXH
1 in.	1.315	0.133	1.679	40	STD
		0.179	2.172	80	XH
		0.250	2.844	160	
		0.358	3.659		XXH
1½ in.	1.900	0.145	2.718	40	STD
		0.200	3.631	80	XH
		0.281	4.859	160	
		0.400	6.408		XXH
2 in.	2.375	0.154	3.653	40	STD
		0.218	5.022	80	XH
		0.343	7.444	160	
		0.436	9.029		XXH
3 in.	3.500	0.216	7.576	40	STD
		0.300	10.25	80	XH
		0.437	14.32	160	
		0.600	18.58		XXH
4 in.	4.50	0.237	10.79	40	STD
		0.281	12.66	60	
		0.337	14.98	80	XH
		0.437	19.01	120	
		0.531	22.51	160	
		0.674	27.54		XXH
6 in.	6.625	0.280	18.97	40	STD
		0.432	28.57	80	XH
		0.562	36.39	120	
		0.718	45.30	160	
		0.864	53.16		XXH
(2 of 2)					
8 in.	8.625	0.250	22.36	20	
		0.277	24.70	30	
		0.322	28.55	40	STD
		0.406	35.64	60	
		0.500	43.39	80	XH
		0.593	50.87	100	
		0.718	60.63	120	
		0.812	67.76	140	
		0.906	74.69	160	
		0.875	72.42		XXH

Table 7.2 Continued

Nominal pipe size	OD	Wall thickness	Weight/ft.	Schedule	Class
10 in.	10.75	0.250	28.04	20	
		0.307	34.24	30	
		0.365	40.48	40	STD
		0.500	54.74	60	XH
		0.593	64.33	80	
		0.718	76.93	100	
		0.843	89.20	120	
		1.000	104.1	140	
		1.125	115.7	160	
12 in.	12.75	0.250	33.38	20	
		0.330	43.77	30	
		0.375	49.56		STD
		0.406	53.53	40	
		0.500	65.42		XH
		0.562	73.16	60	
		0.687	88.51	80	
		0.843	107.2	100	
		1.000	125.5	120	
		1.125	139.7	140	
		1.312	160.3	160	
14 in.	14.0	0.250	36.71	10	
		0.312	45.68	20	
		0.375	54.57	30	STD
		0.437	63.37	40	
		0.500	72.09		XH
		0.593	84.91	60	
		0.750	106.1	80	
		0.937	130.7	100	
		1.093	150.7	120	
		1.250	170.2	140	
		1.406	189.1	160	
16 in.	16.0	0.250	42.05	10	
		0.312	52.36	20	
		0.375	62.58	30	STD
		0.500	82.77	40	XH
		0.656	107.5	60	
		0.843	136.5	80	
		1.031	164.8	100	
		1.218	192.3	120	
		1.437	223.5	140	
		1.593	245.1	160	

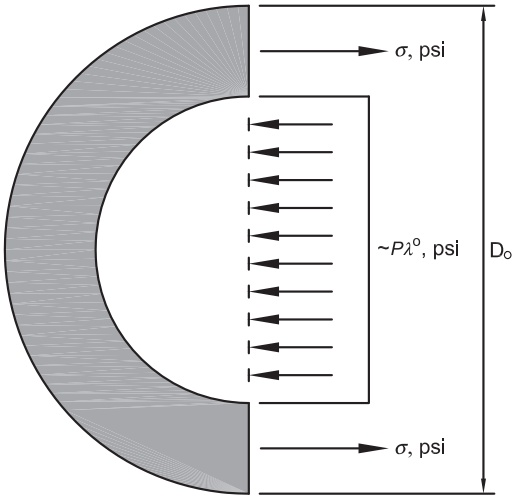

Figure 7.6 General hoop stress free body diagram.

where

t = required pipe wall thickness to be specified when ordering pipe (in. (mm));
t_c = corrosion allowance (in. (mm));
= 0.05 in. (1.3 mm);
t_{th} = thread or groove depth (in. (mm)) (Table 7.3);
P = internal design pipe pressure (psi (kPa));
d_o = pipe outside diameter (in. (mm));
S = allowable stress for pipe material at design temperature (psi (kPa)) (Tables 7.4 and 7.5);
E = longitudinal weld joint factor, dimensionless;
= 1.00 for seamless;
= 0.95 for electric fusion welded, double butt, straight, or spiral seam API 5L;
= 0.85 for electric resistance welding (ERW);
= 0.60 for furnace butt-welded pipe;
Y = coefficient;
= 0.4 for ferrous materials below 900 °F;
Tol = pipe manufacturer's allowed wall thickness tolerance;
= 12.5% for API 5L pipe up to 20 in. diameter;
= 10% for API 5L pipe greater than 20 in. diameter.

Table 7.3 Thread allowance calculations for threaded pipe wall thickness

Nominal pipe size range	t_{th}, in.
1/4-3/8	0.05
½-¾	0.06
1-2	0.08
2½-20	0.11

Table 7.4 Basic allowable stresses for grade B and X42 seamless pipe

Temperature °F	ASTM A106 and API 5L grade B	API 5L X42
−20 to 100	20,000	20,000
200	20,000	20,000
300	20,000	20,000
400	20,000	20,000
500	18,900	N/A
600	17,300	N/A
650	17,000	N/A

Note: For additional information, refer to ASME B31.3, Appendix A.

Table 7.5 Basic allowable stress for other grades of seamless pipe, ASME B31.3

Grade	Minimum temperature	Allowable stress minimum temperature up to 100 °F
API 5L A	−20	16,000
API 5L X42	−20	20,000
API 5L X46	−20	21,000
API 5L X52	−20	22,000
ASTM A106B	−20	20,000
ASTM A333-6	−50	20,000
ASTM A369 FPA	−20	16,000
ASTM A369 FPB	−20	20,000
ASTM A524-1	−20	20,000
ASTM A524-11	−20	18,300

7.2.4.1 Comparison of ASME B31.3 equation to the hoop stress equation

If one compares Equations 7.11 and 7.12, it can be seen that the general hoop stress formula is contained in the code with the product of St times EL, which can be considered as "allowable" stress, being set equal to the hoop stress. A factor "*Y*" is added to account for deviation from the thin-wall cylinder approximation used in deriving the hoop stress formula. The ASME B31.3 code requires that the specified wall thickness be sufficient that, even with the wall in an assumed corroded condition where a thread or groove is cut, the hoop stress will not exceed the allowable. For this reason, t_c and t_{th} must be added to the thickness required by hoop stress alone.

Pipe is manufactured to meet specific nominal wall thicknesses. Finished pipe can have slightly less than the specified wall thickness as long as the pipe meets the nominal wall thickness and tolerance requirements in the code under which the pipe is manufactured, normally ASTM A106 or API 5L. For this reason, ANSI

B31.3 requires one to specify a wall thickness such that the stress at all locations in the pipe is less than allowable. Hence, this is why the correction for tolerance appears in Equation 7.12.

7.2.4.2 Permissible increases in allowable pressure

ASME B31.3 allows for occasional variations above the allowable stress in accordance with the following criteria:

When the variation lasts no more than 10 h at any one time and no more than 100 h per year, it is permissible to exceed the pressure rating or the allowable stress for pressure design at the temperature of the increased condition by not more than 33%.

When the variation lasts no more than 50 h at any one time and not more than 500 h per year, it is permissible to exceed the pressure rating or the allowable stress for pressure design at the temperature of the increased condition by not more than 20%.

7.2.4.3 Maximum allowable working pressure tables

Tables such as Table 7.6, taken from API RP 14E, are published that provide the maximum allowable working pressure (MAWP) for standard pipe diameters and wall thickness as calculated from Equation 7.12 for a given grade of pipe. These tables help one select the appropriate pipe wall thickness.

7.2.5 Pipe wall thickness equation: ASME B31.8

The ASME B31.8 Code is less stringent than ASME B31.3, but more stringent than that of ASME B31.4. ASME B31.8 is often used as the standard of design for natural gas piping systems in facilities, such as compressor stations, gas treatment facilities, and measurement and regulation stations. The pipe wall thickness specified by ASME B31.8 for a given pipe can be calculated by:

$$t = \frac{Pd_o}{2(FETS)} \tag{7.13}$$

where

T = required wall thickness to be specified when ordering pipe (in. (mm));
P = internal pipe pressure (psi (kPa));
d_o = pipe outside diameter (in. (mm));
S = minimum yield strength of pipe (psi (kPa)) (Table 7.7);
F = design factor (Table 7.8) (see discussion that follows);
E = longitudinal joint factor (Table 7.9);
= 1.00 for seamless, ERW, and flash weld;
= 0.80 for furnace lap and electric fusion welded pipe;
= 0.60 for furnace butt-welded pipe;
T = temperature derating factor, dimensionless (Table 7.10).

Table 7.6 Maximum allowable working pressures ASTM A106 grade B seamless pipe (1 of 2)

1	2	3	4	5	6	7	8	9	10
						Maximum allowable working pressures—psig			
Nominal size (in.)	Outside diameter (in.)	Nominal wall thickness (in.)	Nominal weight per foot (lb)	Weight class	Schedule no.	−20/ 400′F	401/ 500F	501/ 600′F	601/ 660′F
(1 of 2)									
2	2.375	0.218	5.02	XS	80	2489	2352	2153	2115
		0.344	7.46	-	160	4618	4364	3994	3926
		0.436	9.03	XXS	-	6285	5939	5436	6342
2½	2.875	0.276	7.66	XS	80	2814	2660	2434	2392
		0.375	10.01	-	160	4194	8963	3628	3566
		0.652	13.70	XXS	-	6850	6473	6926	6822
		0.750	17.02	-	-	9772	9423	8625	8476
3	3.500	0.300	10.26	XS	80	2553	2412	2208	2170
		0.438	14.31	-	160	4123	8896	3666	8604
		0.600	18.58	XXS	-	6090	6765	6268	6176
4	4.500	0.237	10.79	STD	40	1439	1360	1245	1223
		0.337	14.98	XS	80	2276	2151	1969	1934
		0.438	18.98	-	120	3149	2976	2724	2676
		0.631	22.62	-	160	3979	3760	3442	3382
		0.674	27.64	XXS	-	5307	5015	4691	4611
6	6.625	0.280	18.97	STD	40	1206	1139	1043	1026
		0.432	28.57	XS	80	2062	1949	1784	1763
		0.562	36.42	-	120	2817	2663	2437	2395
		0.719	46.34	-	160	3760	366	3252	3196
		0.864	63.16	XXS	-	4660	4404	4031	8961

Continued

Table 7.6 **Continued**

1	2	3	4	5	6	7	8	9	10
						Maximum allowable working pressures—psig			
Nominal size (in.)	Outside diameter (in.)	Nominal wall thickness (in.)	Nominal weight per foot (lb)	Weight class	Schedule no.	−20/ 400′F	401/ 500F	501/ 600′F	601/ 660′F
8	8.626	0.277	24.70	-	80	908	858	786	772
		0.322	28.65	STD	40	1098	1038	960	934
		0.406	85.66	-	60	1457	1877	1260	1288
		0.600	43.39	XS	80	1864	1762	1612	1684
		0.694	60.93	-	100	2278	2153	1970	1936
		0.719	60.69	-	120	2838	2682	2465	2418
		0.812	67.79	-	140	3263	3084	2828	2774
		0.876	72.42	XXS	-	8655	3369	3075	8022
		0.906	74.71	-	160	3700	3496	3200	8146
10	10.75	0.250	28.04	-	20	636	601	660	541
		0.279	31.20	-	-	733	693	634	023
		0.307	34.24	-	30	827	781	716	703
		0.366	40.48	STD	40	1023	967	886	869
		0.600	64.74	XS	60	I486	1403	1284	1262
		0.594	64.40	-_	80	1811	1712	1567	1640
		0.719	77.00	-	100	2252	2128	1948	1914
		0.844	89.27	-	120	2700	2662	2336	2295
		1.000	104.13	XXS	140	3271	3091	2829	2780
		1.126	115.65	-	160	3737	3631	3232	8176

(2 of 2)

12	12.750	0.250	33.38	-	20	635	606	463	466
		0.330	43.77	-	30	760	719	668	646
		0.376	49.56	STD	-	888	839	768	765
		0.406	53.56	-	40	976	923	845	830
		0.500	65.42	XS	-	1246	1177	1078	1059
		0.662	73.22	-	60	1425	1347	1233	1212
		0.688	88.57	-	80	1794	1696	1652	1525
		0.844	107.29	-	100	2258	2133	1953	1919
		1.000	125.49	XXS	120	2730	2579	2361	2320
		1.125	139.68	-	140	3114	2943	2694	2647
		1.312	160.33	-	160	3700	3496	3200	S146
14	14.000	0.250	36.71	-	10	487	460	421	414
		0.312	45.68	-	20	645	610	658	649
		0.376	54,57	STD	30	807	763	698	686
		0.438	63.37	-	40	971	917	840	826
		0.500	72.09	XS	-	1132	1070	979	962
		0.594	85.01	-	60	1379	1303	1193	1172
		0.750	106.13	-	80	1794	1696	1662	1625
		0.938	130.79	-	100	2304	2177	1993	1968
		1.094	150.76	-	120	2734	2584	2365	2324
		1.250	170.22	-	140	3171	2997	2743	2696
		1.406	189.15	-	160	3616	3417	3128	8074
16	16.000	0.250	42.05	-	10	425	402	368	362
		0.312	62.36	-	20	564	633	488	479
		0.376	62.58	STD	30	705	666	610	599
		0.600	82.77	XS	40	988	934	855	840
		0.656	108.00	-	60	1345	1271	1164	1143
		0.843	137.00	-	80	1780	1682	1640	1613
		1.031	165.00	-	100	2225	2103	1925	1891
		1.218	193.00	-	120	2675	2528	2314	2274
		1.437	224.00	-	140	3212	3036	2779	2731

Continued

Table 7.6 Continued

1	2	3	4	5	6	7	8	9	10
						Maximum allowable working pressures—psig			
Nominal size (in.)	Outside diameter (in.)	Nominal wall thickness (in.)	Nominal weight per foot (lb)	Weight class	Schedule no.	−20/ 400′F	401/ 500F	501/ 600′F	601/ 660′F
18	18.000	0.250	47.39	-	10	378	357	827	321
		0.812	69.03	-	20	501	473	433	425
		0.876	70.69	STD	-	626	591	641	632
		0.438	82.06	-	30	752	710	650	639
		0.600	93.45	XS	-	876	828	768	745
		0.562	106.00	-	40	1001	946	866	861
		0.718	133.00	-	60	1319	1246	1141	1121
		0.937	171.00	-	80	1771	1674	1532	1606
		1.166	208.00	-	100	2232	2109	1931	1897
		1.343	239.00	-	150	2632	2487	2277	2287

(Courtesy of API RP 14E)

Table 7.7 Specified minimum yield strength for steel pipe commonly used in pipe systems

Spec. no.	Grade	Type [Note (1)]	SMYS (psi)
API 5L [Note (2)]	A25	BW, ERW, S	25.000
API 5L [Note (2)]	A	ERW, S, DSA	30,000
API 5L [Note (2)]	B	ERW, S, DSA	35,000
API 5L [Note (2)]	X42	ERW, S, DSA	42,000
API 5L [Note (2)]	X46	ERW, S, DSA	46,000
API 5L [Note (2)]	X52	ERW, S, DSA	52,000
API 5L [Note (2)]	X56	ERW, S, DSA	56,000
API 5L [Note (2)]	X60	ERW, S, DSA	60,000
API 5L [Note (2)]	X65	ERW, S, DSA	65,000
API 5L [Note (2)]	X70	ERW, S, DSA	70,000
API 5L [Note (2)]	X80	ERW, S, DSA	80,000
ASTM A 53	Type F	BW	25,000
ASTM A 53	A	ERW, S	30,000
ASTM A 53	B	ERW, S	35,000
ASTM A 106	A	S	30,000
ASTM A 106	B	S	35,000
ASTM A 106	C	s	40,000
ASTM A 134	…	EFW	[Note (3)]
ASTM A 135	A	ERW	30,000
ASTM A 135	B	ERW	35,000
ASTM A 139	A	EFW	30,000
ASTM A 139	B	EFW	35,000
ASTM A 139	C	EFW	42,000
ASTM A 139	D	EFW	46,000
ASTM A 139	E	EFW	52,000
ASTM A 333	1	S, ERW	30,000
ASTM A 333	3	S, ERW	35,000
ASTM A 333	4	S	35,000
ASTM A 333	6	S, ERW	35,000
ASTM A 333	7	S, ERW	35.000
ASTM A 333	8	S, ERW	75,000
ASTM A 333	9	S. ERW	46,000
ASTM A 381	Class Y-35	DSA	35,000
ASTM A 381	Class Y-42	DSA	42,000
ASTM A 381	Class Y-46	DSA	46,000
ASTM A 381	Class Y-48	DSA	48,000
ASTM A 381	Class Y-50	DSA	50,000
ASTM A 381	Class Y-52	DSA	52,000
ASTM A 381	Class Y-56	DSA	56,000
ASTM A 381	Class Y-60	DSA	60,000
ASTM A 381	Class Y-65	DSA	65,000

General note: This table is not complete. For the minimum specified yield strength of other grades and grades in other approved specifications, refer to the particular specification.
Notes: (1) Abbreviations: BW, furnace butt-welded; ERW, electric resistance welded; S, seamless; FW, flash welded; EFW, electric fusion welded; DSA, double submerged-arc welded. (2) Intermediate grades are available in API 5L. (3) See applicable plate specification for SMYS.
For additional information see ASME B31.8. Appendix D.
Courtesy ASME.

Table 7.8 Basic design factor "*F*" for steel pipe construction of natural gas service pipelines

Facility	Location Class				
	1				
	Div. 1	Div. 2	2	3	4
Pipelines, mains, and service lines [see Paragraph 640 2(b)]	0.80	0.72	0.60	0.50	0.40
Crossings of roads, railroads without casing:					
(a) Private roads	0.80	0,72	0.60	0.50	0.40
(b) Unimproved public roads	0.60	0.60	0.60	0.50	0.40
(c) Roads, highways, or public streets, with hard surface and railroads	0.60	0.60	0.50	0.50	0.40
Crossings of roads, railroads with casing					
(a) Private roads	0.80	0.72	0.60	0.50	0 40
(b) Unimproved public roads	0.72	0.72	0.60	0.50	0.40
(c) Roads, highways, or public streets, with hard surface and railroads	0.72	0.72	0.60	0.50	0.40
Parallel encroachment of pipelines and mains on roads and railroads					
(a) Private roads	0.80	0.72	0.60	0.50	0.40
(b) Unimproved public roads	0.80	0.72	0.60	0.50	0.40
(c) Roads, highways, or public streets, with hard surface and railroads	0.60	0.60	0.60	0.50	0.40
Fabricated assemblies (see Paragraph 841.121)	0.60	0.60	0.60	0.50	0.40
Pipelines on bridges (see Paragraph 841.122)	0.60	0.60	0.60	0.50	0.40
Compressor station piping	0.50	0.50	0.50	0.50	0.40
Near concentration of people in Location Classes 1 and 2 [see Paragraph 840.3(b)]	0.50	0.50	0.50	0.50	0.40

Courtesy of ANSI/ASME.
For additional information, see ANSI *Standard B31.8*.

7.2.5.1 ASME B31.8 location class and design factor

The design factor, "*F*," for steel pipe is a construction derating factor dependent upon the location class unit, which is an area that extends 220 yards (200 m) on either side of the center line of any continuous 1 mile (1.6 km) length of pipeline. Each separate dwelling unit in a multiple dwelling unit building is counted as a separate building intended for human occupancy.

To determine the number of buildings intended for human occupancy for an onshore pipeline, one should lay out a zone ¼ mile wide along the route of the pipeline with the pipeline on the center line of this zone and divide the pipeline into random sections 1 mile in length such that the individual lengths will include the maximum

Table 7.9 Basic design longitudinal joint factor "*E*" for steel pipelines in natural gas service

Spec. no.	Pipe class	*E* factor	Spec. no.	Pipe class	*E* factor
ASTM A 53	Seamless	1.00	ASTM A 671	Electric fusion welded	
	Electric resistance welded	1.00		Classes 13. 23. 33, 43. 53	0.80
	Furnace butt welded			Classes 12. 22, 32, 42, 52	1.00
	Continuous Weld	0.60			
ASTM A 106	Seamless	1.00	ASTM A 672	Electric fusion welded	
ASTM A 134	Electric fusion arc welded	0.80		Classes 13, 23, 33. 43. 53	0.80
ASTM A 135	Electric resistance welded	1.00		Classes 12, 22. 32, 42. 52	1.00
ASTM A 139	Electric fusion welded	0.80			
ASTM A 211	Spiral welded steel pipe	0.80	API 5 L	Seamless	1.00
ASTM A 333	Seamless	1.00		Electric resistance welded	1.00
	Electric resistance welded	1.00		Electric flash welded	1.00
ASTM A 381	Double submerged-arc-welded	1 00		Submerged arc welded	1.00
				Furnace butt welded	0.60

General note: Definitions for the various classes of welded pipe are given in Paragraph 804 243.
For additional information, see ANSI Standard 831.B.
(Courtesy of ASME)

Table 7.10 Basic temperature derating factor "*T*" for steel pipeline in natural gas service

Temperature, °F	Derating factor, "*T*"
−20 to 250	1.00
300	0.967
350	0.933
400	0.900
450	0.867

number of buildings intended for human occupancy. Count the number of buildings intended for human occupancy within each 1 mile (1.6 km) zone. For this purpose, each separate dwelling unit in a multiple dwelling unit building is to be counted as a separate building intended for human occupancy.

When a cluster of buildings intended for human occupancy indicates that a basic 1 mile (1.6 km) pipeline should be identified as a Location Class 2 or Location Class 3, the Location Class 2 or Location Class 3 may be terminated 660 yards (200 m) from the nearest building in the cluster. For pipelines shorter than 1 mile (1.6 km) in length, a location class should be assigned that is typical of the location class that would be required for 1 mile (1.6 km) of pipeline traversing the area.

Table 7.8 shows in general terms the location class and design factor, F, to use in different instances. A more specific description of locations for use of the different factors can be found in the ASME B31.8 Code. To determine the location class, it is necessary to first define a location class the area in question. ASME B31.8 applies to gathering lines offshore and onshore, unless within a city or subdivision. For pipelines located within a city or subdivision, local city, county, or state codes apply. The ASME B31.8 Code defines location class in terms of a "1 mile section."

Before 1989, ASME B31.8 designated the design factor by a construction type as either A, B, C, or D. In 1989, the ASME B31.8 Code was revised and the term "construction type" was eliminated. The new designation is called the "location class."

7.2.5.1.1 One-mile section

A 1 mile (1.6 km) section is determined by laying out a zone 1 mile long and 1/4 mile (200 m) wide along the route of the pipeline with the pipeline on the center line of the zone. The number of dwellings intended for human occupancy in this zone is counted. Each separate dwelling unit in a multiple dwelling unit building is counted as a separate building intended for human occupancy.

7.2.5.1.2 Location classes for design and construction

There are five classes of locations for ASME B31.8:

7.2.5.1.2.1 Location Class 1 A Location Class 1 is any 1 mile (1.6 km) section of pipeline that has 10 or fewer buildings intended for human occupancy. This includes areas such as wastelands, deserts, rugged mountains, grazing land, farmland, and sparsely populated areas.

7.2.5.1.2.2 Location Class 1: Division 1 This is a Location Class 1 where the design factor, "F," of the pipe is greater than 0.72 but equal to or less than 0.80 and which has been hydrostatically tested to 1.25 times the maximum operating pressure. (See Table 7.8 for exceptions to design factor.) The design factor "F" of 0.80 is based on actual gas pipeline operational experience at operation levels in excess of those previously recommended by ASME B31.8 Code.

7.2.5.1.2.3 Location Class 1: Division 2 This is a Location Class 1 where the design factor, "*F*," of the pipe is equal to or less than 0.72 and which has been tested to 1.1 times the maximum operating pressure.

7.2.5.1.2.4 Location Class 2 A Location Class 2 is any 1 mile (1.6 km) section that has more than 10 but less than 46 buildings intended for human occupancy. This includes fringe areas around cities and towns, industrial areas, and ranch or country estates.

7.2.5.1.2.5 Location Class 3 This is any 1 mile (1.6 km) section that has 46 or more buildings intended for human occupancy. This includes suburban housing developments, shopping centers, residential areas, industrial areas, and other populated areas not meeting Location Class 4 requirements.

7.2.5.1.2.6 Location Class 4 This is any 1 mile (1.6 km) section of pipeline where multistory buildings are prevalent and traffic is heavy or dense and where there may be numerous other utilities underground. Multistory means four or more floors aboveground including the first, or ground, floor. The depth of basements or number of basement floors is immaterial.

In addition to the criteria previously presented, additional consideration must be given to the possible consequences of a failure near a concentration of people, such as that found in a church, school, multiple dwelling unit, hospital, or residential area of an organized character in a Location Class 1 or 2. If the facility is used infrequently, the requirements of the following paragraph need not be applied:

Pipelines near places of public assembly or concentrations of people such as churches, schools, multiple dwelling unit buildings, hospitals, or recreational areas of an organized nature in Location Classes 1 and 2 should meet the requirements for Location Class 3.

The concentration of people previously referred to is not intended to include groups fewer than 20 people per instance or location, but is intended to cover people in an outside area and in a building.

It should be emphasized that location class (1, 2, 3, or 4), as previously described, is the general description of a geographic area having certain characteristics as a basis for prescribing the types of design, construction, and methods of testing to be used in those locations or in areas that are respectively comparable. A numbered location class, such as Location Class 1, refers only to the geography of that location or a similar area and does not necessarily indicate that a design factor of 0.72 will suffice for all construction in that particular location or area (e.g., in Location Class 1, all crossings without casings require a design factor of 0.60).

When classifying locations for the purpose of determining the design factor, "*F*," for the pipeline construction and testing that should be prescribed, due consideration should be given to the possibility of future development of the area. If at the time of planning a new pipeline in this future development appears likely to be sufficient to change the class location, this should be taken into consideration in the design and testing of the proposed pipeline.

Table 7.8 shows the required design factor to be used for various locations.

7.2.5.2 Comparison on ASME B31.8 equation to the hoop stress equation

In Equation 7.13, the term FETS represents an allowable stress. That is, the approximate safety factors for location class, joint type, and temperature are applied to the minimum yield strength of the pipe material to obtain an allowable stress. Equation 7.13 is merely a thin-wall cylinder hoop stress equation with the assumption $(P < \sigma) = \sigma$ and can be conservatively neglected. This is a conservative assumption in that it overstates the wall thickness required.

7.2.5.3 Comparison of ASME B31.3 and ASME B31.8 equations

Equations 7.12 and 7.13 are slightly different in form because of the different types of piping systems each is intended to cover. In Equation 7.13, no special provision is made for corrosion or thread allowance. Most gas distribution systems are large-diameter, welded pipe. ASME B31.8 does not have a section on threaded or grooved joints; it assumes that all pipe is welded. If threaded pipe is used, consideration should be given to adding an allowance for thread or groove depth, as specified in ASME B31.3 (Table 7.3).

Most gas transmission lines handle a relatively "clean" product, and so, no specific thickness allowance is suggested for internal corrosion in ASME B31.8. In chemical plants and refineries, a more corrosive product is normally handled. ASME B31.3 specifically states that an allowance should be included for corrosion and erosion. API RP 14E suggests that a corrosion/mechanical strength allowance of 0.05 in. (1.25 mm) be used for carbon steel piping. This has become more or less a standard for production facility piping. In sour service, most operators increase the corrosion allowance to 0.10 in. (2.5 mm).

The main difference between Equations 7.12 and 7.13 is that Equation 7.12 uses a single allowable stress for a pipe material, whereas Equation 7.13 uses different "location classes." That is, the assumption is made in ASME B31.3 that the cost of failure of a piping system is the same no matter where the chemical plant or refinery is located. On the other hand, ASME B31.8 recognizes that some gas transmission lines are located in sparsely settled areas where the cost of failure is low, while others are located in the middle of suburban areas where the potential for loss of life is greater, and still, others are located next to large concentrations of people where the risk to life is greater. Thus, along the length of a gas transmission line, several different safety factors may be appropriate. This is considered by multiplying the pipe yield strength by a factor appropriate for a specific risk, rather than specifying a single allowable stress for the material. Factors range from the most liberal ($F = 0.80$) to the most severe ($F = 0.40$). The greater the consequence of failure, the lower the design factor and thus the greater the required wall thickness.

7.2.5.4 Maximum allowable working pressure tables

ASME B31.8 includes a table that lists allowable working pressures for various pipe grades and design factors for normally available pipe diameters and wall thicknesses

for use in gas transmission and distribution piping. Table 7.11 provides the MAWP for most wall thicknesses in sizes 2-30 in. for A106, API 5L, and API 5LX piping using ASME B31.8.

7.2.6 Pipe wall thickness equation: ASME B31.4

ASME B31.4 is somewhat less stringent than that of ASME B31.3 because of the lower levels of hazards associated with liquid pipelines. ASME B31.4 is used often as the standard of design for crude oil piping systems in production facilities, such as pump stations, pigging facilities, measurement and regulation stations, and tank farms. The pipe wall thickness specified by ASME B31.4 for a given pipe can be calculated by

$$t = \frac{Pd_o}{2(FES)} \tag{7.14}$$

where

t = required wall thickness to be specified in ordering pipe (in. (mm));
P = internal pipe pressure (psi (kPa));
d_o = pipe outside diameter (in. (mm));
S = minimum yield strength of pipe (psi (kPa)) (see Table 7.12);
F = design factor;
= 0.72 for all locations;
E = longitudinal weld joint factor;
= 1.0 for seamless, ERW, double submerged arc welding, and flash weld;
= 0.80 for electric fusion (ARC) welded pipe and electric fusion welded pipe,
= 0.60 for furnace butt-welded pipe.

Equation 7.14 is basically the same as Equation 7.13, except the safety factor is fixed at $F = 0.72$ and there is no temperature derating factor. The reason for this is because the consequences of a leak in an oil line are not as severe as the consequences of a leak in a gas line. It is possible for a gas leak to lead quickly to an explosion and loss of life if a combustible cloud of gas comes in contact with a spark. An oil leak, on the other hand, provides a visual warning of its presence. It will typically spread more slowly to a source of combustion, giving ample warning for personnel in the vicinity to escape. While it may catch fire, it is unlikely to result in an explosion.

ASME B31.4 does not have a temperature derating factor (T) since it states that it is only applicable to temperatures between −20 and 250 °F (−29 and 121 °C).

7.2.7 Comparison of wall thickness calculations of ASME B31.3 and ASME B31.8

If we compare the wall thicknesses required by ASME B31.3 and ASME B31.8 for piping in a compressor station, it can be seen that the ASME B31.3 Code is more conservative than the ASME B31.8 Code, especially when using ERW pipe (refer to Figure 7.7) and higher strength pipe material (refer to Figure 7.8). This difference

Table 7.11 Maximum allowable working pressure based on ASME B31.8

Nom pipe size	OD	Wall Thk.	Allowable working pressure up to 250 °F, in psig								
			Construction type design factors								
			Location Class 1, $F = 0.72$					Location Class 2, $F = 0.60$			
			GR.B					GR.B			
			35000	42000	46000	52000	60000	35000	42000	46000	52000
(1 of 2)											
2	(STD)	0.154	3268					2723			
	2.375	0.218	4626					3855			
3	3.500	0.125	1800					1500			
	(STD)	0.156	2246					1872			
		0.188	2707					2256			
		0.216	3110					2692			
		0.25	3600					3000			
		0.281	4046					3372			
		0.3	4320					2600			
4	4.500	0.125	1400	1680	1840			1167	1400	1533	
	(STD)	0.156	1747	2097	2296			1456	1747	1913	
		0.188	2105	2526	2767			1754	2105	2306	
		0.219	2453	2943	3223			2044	2453	2686	
		0.237	2654	3185	3488			2212	2654	2907	
		0.25	2800	3360	3680			2333	2800	3067	
		0.281	3147	3776	4136			2623	3147	3447	
		0.312	3494	4193	4593			2912	3494	3627	
		0.337	3774	4530	4961			3145	3775	4134	
6	6.625	0.156	1187	1424	1560	1763		989	1187	1300	1469
	(STD)	0.188	1429	1716	1880	2124		1192	1430	1567	1770
		0.219	1666	2000	2190	2475		1388	1666	1825	2063
		0.25	1902	2282	2500	2826		1585	1902	2063	2355
		0.28	2130	2556	2799	3164		1775	2130	2333	2637
		0.312	2373	2848	3120	3527		1978	2374	2600	2933
		0.375	2853	3424	3750	4237		2377	2853	3125	3531
		0.132	3287	3943	4319	4883		2739	3286	3399	4069
8	8.625	0.156	912	1094	1198	1354		760	912	998	1128
	(STD)	0.188	1098	1318	1444	1632		915	1098	1203	1360
		0.203	1186	1424	1559	1762		989	1186	1299	1469
		0.219	1280	1535	1681	1901		1067	1280	1401	1584
		0.25	1461	1753	1920	2170		1217	1461	1600	1809
		0.277	1618	1942	2128	2405		1349	1618	1773	2004
		0.312	1823	2189	2396	2709		1520	1823	1997	2258
		0.322	1882	2258	2473	2796		1568	1882	2061	2329
		0.344	2011	2412	2642	2988		1676	2011	2202	2490
		0.375	2191	2628	2880	3256		1826	2191	2399	2713
		0.438	2560	3071	3364	3803		2133	2560	2804	3170
		0.5	2922	3506	3840	4341		2435	2922	3200	3617

	Location Class 3, $F = 0.50$					Location Class 4, $F = 0.40$				
	GR.B					GR.B				
60000	35000	42000	46000	52000	60000	35000	42000	46000	52000	60000
	2270					118				
	3213					2570				
	1250					1000				
	1560					1248				
	1880					1504				
	2160					1728				
	2500					2000				
	2810					2248				
	3000					2400				
	973	1167	1278			778	933	1022		
	1214	1456	1595			971	1165	1276		
	1462	1755	1922			1170	1404	1537		
	1704	2044	2239			1363	1635	1791		
	1844	2212	2423			1475	1770	1938		
	1945	2333	2556			1556	1889	2044		
	2186	2622	2873			1748	2098	2298		
	2427	2912	3190			1941	2330	2552		
	2621	3146	3445			2097	2516	2756		
	824	989	1083	1224		659	791	866	980	
	993	1192	1306	1475		794	954	1044	1180	
	1157	1389	1521	1719		926	1111	1216	1375	
	1321	1585	1736	1963		1057	1268	1389	1570	
	1479	1775	1944	2198		1183	1420	1555	1758	
	1549	1978	2167	2449		1319	1582	1733	1959	
	1981	2378	2604	29433		1585	1902	2063	2354	
	2283	2738	3000	3391		1826	2191	2400	2713	
	633	760	832	940		506	606	666	752	
	763	915	1003	1133		610	732	802	907	
	824	989	1083	1224		659	791	866	979	
	889	1067	1168	1320		711	853	934	1056	
	1014	1217	1333	1507		812	974	1067	1206	
	1124	1349	1478	1670		899	1079	1182	1336	
	1266	1520	1664	1941		1013	1216	1331	1505	
	1307	1568	1717	1881		1045	1254	1374	1553	
	1396	1676	1835	2075		1117	1340	1468	1660	
	1521	1826	1999	2261		1217	1460	1599	1806	
	1778	2133	2336	2641		1422	1706	1869	2113	
	2029	2435	2667	3014		1623	1948	2133	2412	

Continued

Table 7.11 Continued

Nom pipe size	OD	Wall Thk.	Allowable working pressure up to 250 °F, in psig								
			Construction type design factors								
			Location Class 1, $F = 0.72$					Location Class 2, $F = 0.60$			
			GR.B					GR.B			
			35000	42000	46000	52000	60000	35000	42000	46000	52000
10	10.750	0.188	881	1058	1158	1310		733	881	965	1091
	(STD)	0.203	959	1143	1251	1415		794	952	1043	1179
		0.219	1026	1231	1348	1525		855	1026	1124	1271
		0.25	1172	1407	1540	1741		977	1172	1264	1451
		0.279	1309	1570	1719	1944		1091	1309	1433	1620
		0.307	1440	1728	1892	2138		1200	1440	1577	1782
		0.344	1613	1935	2120	2396		1344	1613	1767	1997
		0.365	1711	2054	2249	2542		1426	1711	1874	2119
		0.438	2054	2464	2700	3051		1712	2054	2250	2543
		0.5	2344	2813	3081	3483		1953	2344	2567	2902
12	12.750	0.188	743	592	977	1104		619	743	814	920
	(STD)	0.203	803	963	1055	1193		669	803	879	995
		0.219	866	1039	1138	1287		722	866	948	1073
		0.25	988	1186	1299	1468		824	988	1082	1224
		0.281	1111	1332	1460	1651		926	1111	1217	1376
		0.312	1233	1480	1620	1832		1028	1233	1350	1527
		0.33	1305	1566	1715	1939		1088	1305	1430	1616
		0.344	1359	1631	1786	2020		1133	1359	1488	1683
		0.375	1482	1779	1948	2202		1235	1482	1624	1835
		0.406	1606	1926	2110	2385		1338	1606	1758	1988
		0.438	1732	2077	2275	2572		1443	1732	1896	2144
		0.5	1976	2372	2598	2936		1647	1976	2165	2447
(2 of 2)											
16	16.000	0.219	689	828	905	1024	1183	575	689	755	854
	(STD)	0.25	785	945	1035	1170	1350	656	786	863	975
		0.281	886	1063	1164	1316	1518	738	886	970	1097
		0.312	982	1179	1291	1460	1685	818	982	1076	1217
		0.344	1064	1300	1424	1609	1858	903	1064	1187	1341
		0.375	1181	1418	1563	1755	2025	984	1181	1294	1463
		0.438	1379	1655	1813	2049	2365	1149	1379	1511	1707
		0.5	1576	1890	2070	2340	2700	1313	1575	1725	1950
		0.625	1969	2363	2588	2925	3375	1641	1969	2157	2438
20	20.000	0.25	630	756	828	936	1080	525	630	890	780
	(STD)	0.281	709	851	931	1053	1214	591	709	776	878
		0.312	786	943	1033	1168	1348	656	786	861	973
		0.344	867	1040	1139	1289	1486	723	868	950	1074
		0.375	945	1134	1242	1404	1620	788	945	1085	1170
		0.406	1023	1228	1345	1520	1754	853	1023	1121	1267
		0.438	1103	1324	1450	1639	1892	919	1103	1208	1366
		0.5	1260	1512	1656	1872	2160	1050	1260	1380	1560
		0.625	1575	1890	2070	2340	2700	1313	1575	1725	1950
		0.75	1890	2268	2484	2808	3240	1575	1890	2070	2340

	Location Class 3, $F = 0.50$					Location Class 4, $F = 0.40$				
	GR.B					GR.B				
60000	35000	42000	46000	52000	60000	35000	42000	46000	52000	60000
	612	735	804	909		490	588	644	728	
	661	794	869	983		529	635	695	786	
	713	855	936	1059		570	684	749	847	
	814	977	1070	1209		651	781	856	967	
	909	1091	1194	1350		727	872	955	1080	
	1000	1200	1314	1486		800	960	1051	1189	
	1120	1344	1473	1664		896	1075	1178	1331	
	1188	1426	1562	1766		951	1141	1249	1412	
	1426	1712	1875	2119		1141	1369	1500	1695	
	1628	1953	2140	2419		1302	1563	1712	1935	
	516	619	676	767		413	495	543	613	
	558	669	733	829		446	535	586	663	
	601	722	790	894		481	577	632	715	
	685	824	902	1020		549	659	722	816	
	771	926	1014	1146		617	740	811	917	
	656	1028	1125	1273		685	822	900	1018	
	906	1088	1191	1346		725	870	953	1077	
	944	1133	1240	1403		755	906	992	1122	
	1029	1235	1353	1529		824	988	1082	1224	
	1115	1338	1465	1656		892	1070	1172	1325	
	1203	1443	1580	1786		962	1154	1264	1429	
	1373	1647	1804	2039		1098	1318	1443	1631	
986	479	575	629	711	822	383	460	503	569	657
1125	547	656	719	813	936	438	525	575	650	750
1265	615	738	809	914	1054	492	591	647	731	843
1404	682	819	896	1014	1170	546	655	717	611	936
1548	753	903	989	1118	1290	602	722	791	894	1032
1688	820	984	1078	12119	1407	656	788	863	975	1125
1971	958	1149	1259	1423	1648	766	919	1007	1138	1314
2250	1094	1313	1438	1625	1875	875	1050	1150	1300	1500
2512	1368	1641	1796	2031	2344	1094	1313	1438	1625	1875
900	438	525	575	650	750	350	420	460	520	600
1012	492	591	647	731	843	394	473	518	285	674
1123	547	656	719	813	936	438	525	575	650	749
1238	603	723	791	895	1032	482	578	633	716	826
1350	656	788	863	976	1125	525	630	690	780	900
1462	710	853	934	1066	1218	568	682	747	844	974
1577	766	919	1007	1138	1314	613	735	805	910	1051
1800	875	1050	1150	1300	1500	700	840	920	1040	1200
2250	1094	1313	1438	1625	1875	875	1060	1150	1300	1500
2700	1313	1575	1725	1950	2250	1050	1260	1380	1560	1800

Continued

Table 7.11 Continued

Nom pipe size	OD	Wall Thk.	Allowable working pressure up to 250 °F, in psig								
			Construction type design factors								
			Location Class 1, $F = 0.72$					Location Class 2, $F = 0.60$			
			GR.B					GR.B			
			35000	42000	46000	52000	60000	35000	42000	46000	52000
24	24.000	0.281	590	709	776	877	1012	492	591	647	731
	(STD)	0.312	655	786	861	973	1123	547	656	719	812
		0.344	722	866	949	1073	1238	602	722	791	894
		0.375	788	945	1035	1170	1350	656	788	862	975
		0.406	863	1024	1121	1267	1462	711	858	935	1056
		0.438	919	1103	1208	1366	1577	766	919	1006	1138
		0.5	1060	1260	1380	1560	1800	875	1050	1150	1300
		0.625	1312	1575	1725	1950	2250	1094	1313	1437	1625
		0.75	1575	1890	2070	2340	2700	1313	1575	1725	1950
26	26	0.281	545	654	717	810	934	454	545	597	675
		0.312	604	727	796	900	1037	503	604	663	750
		0.344	667	800	876	990	1143	556	666	730	825
		0.375	726	872	955	1080	1426	606	727	796	900
		0.406	787	945	1035	1170	1349	656	787	863	875
		0.438	848	1018	1115	1260	1456	707	848	929	1050
		0.5	969	1163	1274	1440	1662	808	969	1062	1200
		0.625	1211	1454	1592	1800	2077	1010	1212	1327	1500
		0.75	1454	1745	1911	2160	2492	1212	1454	1592	1800
30	30.000	0.312	525	630	690	780	899	438	525	575	650
	(STD)	0.344	576	693	759	858	991	482	577	632	715
		0.375	630	756	828	936	1080	525	630	690	780
		0.406	682	619	897	1014	1169	568	682	747	845
		0.438	735	882	966	1092	1261	612	735	805	910
		0.5	840	1006	1104	1248	1440	700	840	920	1040
		0.625	1050	1260	1380	1560	1800	875	1050	1150	1300
		0.75	1260	1512	1656	1872	2160	1050	1260	1360	1560

	Location Class 3, $F = 0.50$					Location Class 4, $F = 0.40$				
	GR.B					GR.B				
60000	**35000**	**42000**	**46000**	**52000**	**60000**	**35000**	**42000**	**46000**	**52000**	**60000**
643	410	492	539	609	703	328	394	431	467	562
969	456	547	599	677	780	365	438	479	542	624
1032	502	802	659	745	860	401	481	527	596	688
1125	547	656	719	813	938	438	525	575	650	750
1215	592	711	779	880	1015	474	569	623	704	812
1314	638	766	859	948	1095	510	613	671	758	876
1500	729	875	958	1083	1250	583	700	767	867	1000
1875	911	1094	1198	1354	1563	729	875	958	1063	1250
2250	1094	1313	1438	1625	1875	875	1060	1150	1300	1500
778	379	454	498	563	649	303	363	398	450	519
864	421	505	553	625	720	337	404	442	500	576
963	463	555	606	688	794	370	444	487	550	635
1039	505	606	663	750	866	404	485	531	600	692
1124	547	656	719	813	937	437	585	575	650	750
1213	589	707	774	875	1011	471	565	619	700	809
1385	673	808	884	1000	1154	538	646	708	800	923
1731	641	1010	1106	1250	1442	673	808	885	1000	1154
2077	1010	1212	1327	1500	1731	808	969	1062	1200	1385
749	365	436	479	542	624	292	350	383	433	499
826	401	481	527	596	688	321	385	422	477	550
900	437	535	575	650	750	350	420	460	520	600
974	474	569	623	704	812	379	455	498	563	630
1061	510	612	671	758	876	408	490	537	607	701
1200	583	700	767	867	1000	467	560	613	693	800
1500	729	845	958	1063	1250	583	700	767	867	1000
1800	875	1050	1150	1300	1500	700	840	920	1040	1200

Table 7.12 Minimum yield stress and weld joint factor "*E*" for common seamless pipe materials

Specification	Grade	Specified min. yields strength, psi (MPa)	Weld joint factor *E*
API 5L	A25	25,000 (172)	1.00
API 5L, ASTM A 53, ASTM A 106	A	30,000 (207)	1.00
API 5L, ASTM A 53, ASTM A 106	B	35,000 (241)	1.00
API 5LU	U80	80,000 (551)	1.00
API 5LU	U100	100.000 (689)	1.00
API 5L	X42	42,000 (289)	1.00
API 5L	X46	46,000 (317)	1.00
API 5L	X52	52,000 (358)	1.00
API 5L	X56	56,000 (386)	1.00
API 5L	X60	60,000 (413)	1.00
API 5L	X65	65,000 (448)	1.00
API 5L	X70	70,000 (482)	1.00
ASTM A 106	C	40,000 (278)	1.00
ASTM A 524	I	35,000 (241)	1.00
ASTM A 524	H	30,000 (207)	1.00
Furnace butt welded, continuous welded			
ASTM A 53		25,000 (172)	0.60
API 5L Classes I and II	A25	25,000 (172)	0.60
Electric resistance welded and electric flash welded			
API 5L	A25	25,000 (172)	1.00
API 5L, ASTM A 53, ASTM A 135	A	30,000 (207)	1.00
API 5L. ASTM A 53, ASTM A 135	B	35,000 (241)	1.00
API 5L	X42	42,000 (289)	1.00
API 5L	X46	46,000 (317)	1.00
API 5L	X52	52.000 (358)	1.00
API 5L	X56	56,000 (386)	1.00
API 5L	X60	60,000 (413)	1.00
API 5L	X65	65,000 (448)	1.00
API 5L	X70	70,000 (482)	1.00
API 5LU	U80	80,000 (551)	1.00
API 5LU	U100	100,000 (689)	1.00
Electric fusion welded			
ASTM A 134	…	…	0.80
ASTMA 139	A	30,000 (207)	0.80
ASTMA 139	B	35,000 (241)	0.80

Table 7.12 Continued

Specification	Grade	Specified min. yields strength, psi (MPa)	Weld joint factor *E*
Electric fusion welded			
ASTM A 671	…	Note (1)	1.00 [Notes (2), (3)]
ASTM A 671	…	Note (1)	0.70 [Note (4)]
ASTM A 672	…	Note (1)	1.00 [Notes (2), (3)]
ASTM A 672	…	Note (1)	0.80 [Note (4)]
Submerged arc welded			
API 5L	A	30,000 (307)	1.00
API 5L	B	35,000 (241)	1.00
API 5L	X42	42,000 (289)	1.00
API 5L	X46	46,000 (317)	1,00
API 5L	X52	52,000 (358)	1.00
API 5L	X56	56,000 (386)	1 00
API 5L	X60	60,000 (413)	1,00
API 5L	X65	65,000 (448)	1.00
API 5L	X70	70,000 (482)	1.00
API 5LU	U80	80.000 (551)	1.00
API 5LU	U100	100,000 (689)	1.00
ASTM A 381	Y35	35,000 (241)	1.00
ASTM A 381	Y42	42,000 (290)	1.00
ASTM A 381	Y46	46,000 (317)	1.00
ASTM A 381	Y48	48,000 (331)	1.00
ASTM A 381	Y50	50,000 (345)	1.00
ASTM A 381	Y52	52,000 (358)	1.00
ASTM A 381	Y60	60,000 (413)	1.00
ASTM A 381	Y65	65,000 (448)	1.00

Notes: (1) See applicable specification yield point and refer to paragraph 402.3.1 for calculation of S. (2) Factor applies foe Classes 12.22.32.42 and 52 only (3) Radiography must be performed after heat treatment (4) Factor applies for Classes 13, 23,33,43 and 53 only (For additional information see ASME B31.4 Table 10).
Courtesy of ANSI/ASME.

creates a problem in choosing the interface between a production facility designed to ASME B31.3 and a pipeline designed to ASME B31.8 or ASME B31.4. The location of the transition varies from company to company, but it is usually at the plant/facility fence for an onshore facility and at the first flange above the water on an offshore platform. On an offshore platform, the design factor changes from 0.72 to 0.50, either 300 ft. from the base of the riser or at the base of the riser. ASME B31.8 does not allow a 33% increase in allowable pressure for transient conditions.

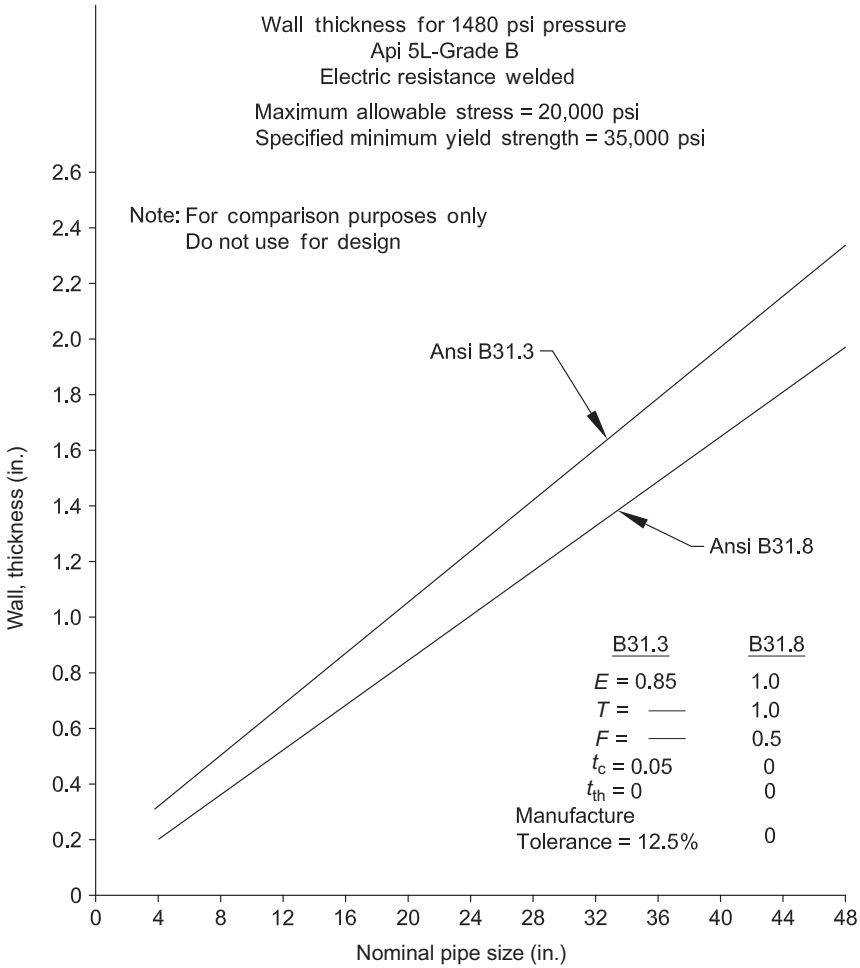

Figure 7.7 Comparison of wall thickness requirements between ASME B13.3 and B31.8 for API 5L grade B pipe.

Using ASME B31.3 criteria for oil and gas facility piping will assure a very conservative design. However, the cost associated with ASME B31.3 piping design will be substantial when compared with other codes and may not be necessary, especially for onshore facilities.

Example 7.1a *Determining the line size and wall thickness of a liquid line (field units)*

Given:

Flow rates: condensate = 800 BPD
Water = 230 BPD

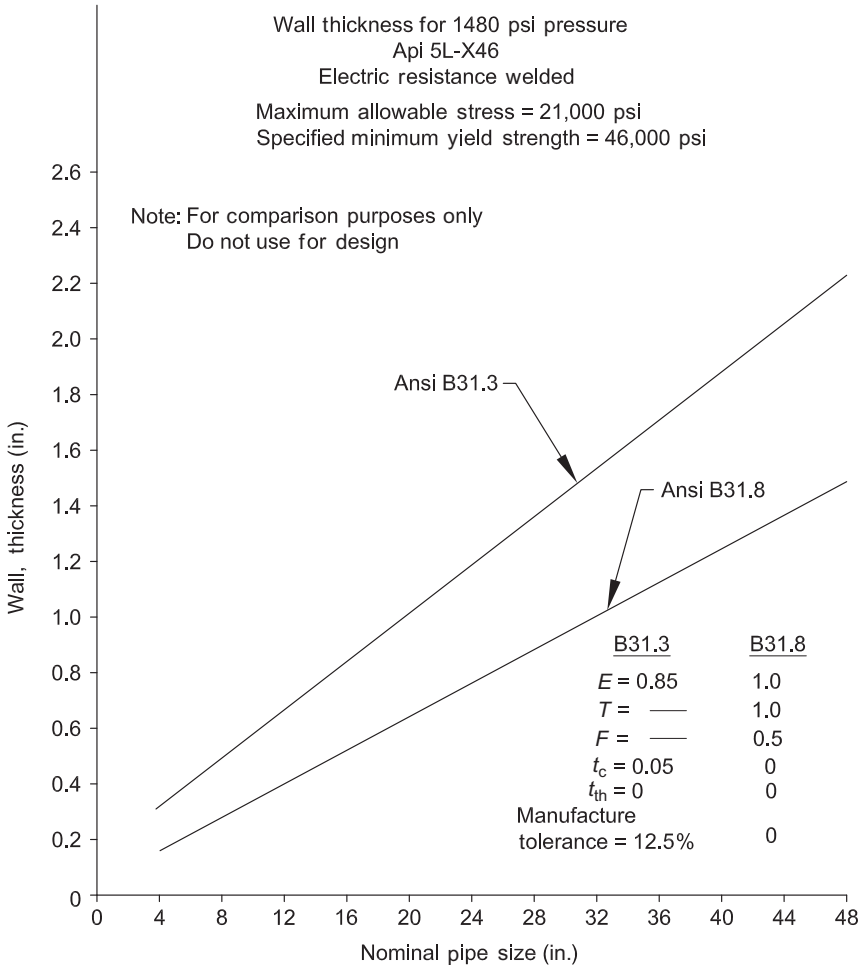

Figure 7.8 Comparison of wall thickness requirements between ASME B13.3 and B31.8 for API 5L X46 pipe.

Specific gravity condensate = 0.87
Water = 1.05
Viscosity = 3 cp
Length = 7000 ft.
Inlet pressure = 900 psig
Temperature = 80 °F

Liquid flows to a low-pressure separator operating at 150 psig. The line is rated for 1480 psi.

Determine:
Choose a line size and wall thickness using the design criteria in

(A) ASME B31.3,
(B) ASME B31.4,
(C) ASME B31.8.

Solution:

(1) Establish design criteria.
$V_{max} = 15$ ft./s
$V_{min} = 3$ ft./s
$\Delta P_{Allow} = 900 - 150 = 750$ psi

(2) Calculate the liquid velocity:

$$V = \frac{(0.012)Q_L}{d^2} = \frac{(0.012)(1030)}{d^2} = \frac{12.36}{d^2}$$

V	ID
3	2.03
15	0.91

(3) Evaluate pressure drop constraint.

From Example 6.1a, the pressure drop in the 2 in. line is acceptable. For flexibility and mechanical strength, it is better to use a 2 in. line, rather than a 1 in. or 1½ in. line.

(4) Calculate wall thickness using ASME B31.3:

$$\begin{aligned} t &= \left[t_c + t_{th} + \left(\frac{Pd_o}{2(SE+PY)}\right)\left(\frac{100}{100-\text{Tol}}\right)\right] \\ &= \left[0.05 + 0 + \left(\frac{(1480)(2.375)}{2[(20,000)(1)+(1480)(0.4)]}\right)\left(\frac{100}{100-12.5}\right)\right] \\ &= 0.155\,\text{in.} \end{aligned}$$

From ASME pipe schedule Table 7.2, select a nominal 2 in. standard weight (Schedule 40) pipe.

(5) Calculate wall thickness using ASME B31.4:

$$\begin{aligned} t &= \frac{Pd_o}{2(FES)} \\ &= \frac{(1480)(2.375)}{2(0.72)(1.0)(35,000)} \\ &= 0.0697\,\text{in.} \end{aligned}$$

For mechanical strength, select a nominal 2 in. standard weight (Schedule 40) pipe.

(6) Calculate wall thickness using ASME B31.8:

$$t = \frac{Pd_o}{2(FETS)}$$

For "off plot" (outside the facility), a design factor of 0.72 would be used, which would yield the same wall thickness as in Step 5.

For "on plot" (inside the facility), a design factor of 0.6 would be used yielding

$$t = \frac{(1480)(2.375)}{2.(0.6)(1)(35,000)}$$

$$= 0.0837 \text{in.}$$

Again, from ASME pipe Table 7.2, select a nominal 2 in. standard weight (Schedule 40) pipe for mechanical strength.

Example 7.1b *Determining the line size and wall thickness of a liquid line (SI units)*

Given:

Flow rates: condensate = 5.30 m^3/h
Water = 1.52 m^3/h
Specific gravity condensate = 0.87
Water = 1.05
Viscosity = 0.003 Pa s
Length = 2130 m
Inlet pressure = 6200 kPa (abs)
Temperature = 27 °C

Liquid flows to a low-pressure separator operating at 1035 kPa. The line is rated for 10,200 kPa.

Determine:
Choose a line size and wall thickness using the design criteria in

(A) ASME B31.3,
(B) ASME B31.4,
(C) ASME B31.8.

Solution:

(1) Establish design criteria.
$V_{max} = 4.5$ m/s
$V_{min} = 0.9$ m/s
$\Delta P_{Allow} = 6200 - 1035 = 5165$ kPa
(2) Calculate the liquid velocity:

$$V = \frac{(353.68)Q_L}{d^2} \frac{(353.68)(6.82)}{d^2} = \frac{24.12}{d^2}$$

V	ID
0.9 m/s	51.8 mm
4.5 m/s	23.2 mm

(3) Evaluate pressure drop constraint.

From Example 6.1b, the pressure drop in a 50.8 mm line is acceptable. However, for flexibility and mechanical strength, it is probably better to use a 50.8 mm line, rather than a 25.4 mm or 38.1 mm line.

(4) Calculate wall thickness using ASME B31.3:

$$t = \left[t_c + t_{th} + \left(\frac{Pd_o}{2(SE+PY)}\right)\left(\frac{100}{100-\text{Tol}}\right)\right]$$

$$= \left[0.05 + 0 + \left(\frac{(1480)(2.375)}{2[(20,000)(1)+(1480)(0.4)]}\right)\left(\frac{100}{100-12.5}\right)\right]$$

$$= 3.94 \text{ mm } (0.155 \text{ mm})$$

From ASME pipe schedule Table 7.2, select a nominal 50.8 mm standard weight (Schedule 40) pipe.

(5) Calculate wall thickness using ASME B31.4:

$$t = \frac{Pd_o}{2(FES)}$$

$$= \frac{(1480)(2.375)(25.4)}{2(0.72)(1.0)(35,000)}$$

$$= 1.77 \text{ mm } (0.0697)$$

For mechanical strength, select a nominal 50.8 mm standard weight (Schedule 40) pipe.

(6) Calculate wall thickness using ASME B31.8:

$$t = \frac{Pd_o}{2(FETS)}$$

For "off plot" (outside the facility), a design factor of 0.72 would be used, which would yield the same wall thickness as in Step 5.

For "on plot" (inside the facility), a design factor of 0.6 would be used yielding

$$t = \frac{(1480)(2.375)(25.4)}{2.(0.6)(1)(35,000)}$$

$$= 2.126 \text{mm } (0.0837 \text{in.})$$

Again, from ANSI pipe Table 7.2, select a nominal 50.8 mm standard weight (Schedule 40) pipe for mechanical strength.

Example 7.2a *Determining the line size and wall thickness of a gas line (field units)*

Given:

Flow rate gas = 23 MMSCFD
Viscosity = 0.013 cp
Gravity gas = 0.85
Length = 7000 ft.
Inlet pressure = 900 psi
Temperature = 80 °F
Compressibility factor = 0.67

Gas flows to a gas contactor that operates at 800 psig. The MAWP of the line is 1480 psi.

Determine:
Choose a line size and wall thickness using the design criteria in

(A) ASME B31.3,
(B) ASME B31.8.

Solution:

(1) Establish design criteria.
$V_{max} = 60$ ft./s
$V_{min} = 10\text{-}15$ ft./s
$\Delta P_{Allow} = 900 - 800 = 100$ psi
At this low pressure, erosional velocity is not important.

(2) Calculate the gas velocity. Maximum velocity occurs at contactor:

$$V = \frac{60 Q_g TZ}{Pd^2} = \frac{(60)(23)(540)(0.67)}{815 d^2} = \frac{613}{d^2}$$

V	ID
10	7.82
15	6.4
60	3.8

(3) From Example 6.7a, the pressure drop in a 4 in. line is not acceptable. The pressure drop in a 6 in. line is acceptable, which also yields reasonable velocities between 15 and 60 ft./s.

(4) Calculate wall thickness using ASME B31.3:

$$t = \left[t_c + t_{th} + \left(\frac{P d_o}{2(SE + PY)}\right)\left(\frac{100}{100 - \text{Tol}}\right)\right]$$

$$= \left[0.05 + 0 + \left(\frac{(1480)(6.625)}{2[(20,000)(1) + (1480)(0.4)]}\right)\left(\frac{100}{100 - 12.5}\right)\right]$$

$$= 0.331 \text{ in.}$$

From ANSI pipe Table 7.2, select a 6 in. XH pipe. If available, a 6 in. pipe with 0.375 wall thickness could be used.

(5) Calculate wall thickness using ASME B31.8:

$$t = \frac{Pd_o}{2(FETS)}$$

Off plot (outside the facility):

$$t = \frac{(1480)(6.625)}{2(0.72)(1.0)(1.0)(35,000)}$$
$$= 0.196\,\text{in.}$$

From ANSI pipe Table 7.2, select a 6 in. standard pipe. If available, a 6 in. pipe with a 0.219 wall thickness could be used.

"On plot" (inside the facility):

$$t = \frac{(1480)(6.625)}{2(0.6)(1.0)(1.0)(35,000)}$$
$$= 0.234\,\text{in.}$$

From ANSI pipe Table 7.2, select a 6 in. standard weight pipe.

Example 7.2b *Determining the line size and wall thickness of a gas line (SI units)*

Given:

Flow rate gas = 27,100 std m^3/h
Viscosity = 1.3×10^{-5} Pa s
Gravity gas = 0.85
Length = 2130 m
Inlet pressure = 6200 kPa
Temperature = 27 °C
Compressibility factor = 0.67

Gas flows to a gas contactor that operates at 5515 kPa. The MAWP of the line is 10,200 kPa.

Determine:
Choose a line size and wall thickness using the design criteria in

(A) ASME B31.3,
(B) ASME B31.8.

Solution:

(1) Establish design criteria.
$V_{max} = 18$ m/s
$V_{min} = 3\text{-}4.5$ m/s
$\Delta P_{Allow} = 6200 - 5515 = 685$ kPa

At this low pressure, erosional velocity is not important.

(2) Calculate the gas velocity. Maximum velocity occurs at contactor:

V	ID
3 m/s	199.1 mm
4.5 m/s	162.6 mm
18 m/s	81.3 mm

(3) From Example 6.7b, the pressure drop in a 101.6 mm line is not acceptable. The pressure drop in the 152.4 mm line is acceptable, which also yields reasonable velocities between 4.5 and 18 m/s.

(4) Calculate wall thickness using ASME B31.3:

$$\begin{aligned} t &= \left[t_c + t_{th} + \left(\frac{Pd_o}{2(SE+PY)}\right)\left(\frac{100}{100-\text{Tol}}\right)\right] \\ &= \left[0.05 + 0 + \left(\frac{(1480)(6.625)}{2[(20,000)(1)+(1480)(0.4)]}\right)\left(\frac{100}{100-12.5}\right)\right] \quad (25.4) \\ &= 8.41\,\text{mm}\ (0.331\,\text{in.}) \end{aligned}$$

From ANSI pipe Table 7.2, select a 152.4 mm XH pipe. If available, a 152.4 mm pipe with 9.5 mm wall thickness could be used.

(5) Calculate wall thickness using ASME B31.8:

$$t = \frac{Pd_o}{2(FETS)}$$

"Off plot" (outside the facility):

$$\begin{aligned} t &= \frac{(1480)(6.625)(25.4)}{2(0.72)(1.0)(1.0)(35,000)} \\ &= 4.98\ \text{mm} \end{aligned}$$

From ANSI pipe Table 7.2, select a 152.4 mm standard pipe. If available, a 152.4 mm pipe with a 5.56 mm wall thickness could be used.

"On plot" (inside the facility):

$$\begin{aligned} t &= \frac{(1480)(6.625)(25.4)}{2(0.6)(1.0)(1.0)(35,000)} \\ &= 5.97\ \text{mm} \end{aligned}$$

From ANSI pipe Table 7.2, select a 152.4 mm standard weight pipe.

Example 7.3a *Determining line size and wall thickness of a two-phase line (field units)*

Given:

Flow rate: condensate = 800 BPD
Water = 230 BPD
Gas = 23 MMSCFD
Specific gravity condensate = 0.87
Water = 1.05
Gas = 0.85
Viscosity condensate and water = 3 cp
Gas = 0.013 cp
Inlet pressure = 900 psig
Temperature = 80 °F
Compressibility factor = 0.67

Fluid flows to a separator that operates at 800 psig. The MAWP of the line is 1480 psi.

Determine:
Choose a line size and wall thickness using the design criteria in

(A) ASME B31.3,
(B) ASME B31.8.

Solution:

(1) Establish design criteria.
$V_{max} = 60$ ft./s
$V_{min} = 10\text{-}15$ ft./s
$\Delta P_{Allow} = 100$ psi

(2) Calculate the erosional velocity:

The critical condition occurs at the lowest pressure. However, to be conservative, compute V_e at 900 psi.

From previous data, $\rho_m = 6.93\,\text{lb/ft.}^3$ and

$$V_e = \frac{C}{(\rho_m)^{0.5}}$$

C	V_e
80	30.4
100	38.0
120	45.6
140	53.2

(3) Calculate the minimum diameter d_{min}:

$$d = \left[\frac{\left[11.9 + \left(\frac{ZRT}{16.7P}\right)\right] Q_L}{1000V}\right]^{0.5}$$

substituting

$$d = \left[\frac{\left[11.9 + \left(\frac{(22,350)(540)(0.67)}{(16.7)(815)}\right)\right](1030)}{1000V}\right]^{0.5}$$

$$= \frac{25}{V^{0.5}}$$

V	d_{min}
10	7.9
15	6.5
30	4.6
38	4.1
46	3.7
53	3.4

(4) Evaluate the pressure drop constraint.

From Example 6.10a, a 4 in. line is not acceptable. The 6 in. line is marginal, while the 8 in. line is acceptable. Select the 8 in. line.

(5) Calculate wall thickness using ASME B31.3:

$$t = \left[t_c + t_{th} + \left(\frac{Pd_o}{2(SE+PY)}\right)\left(\frac{100}{100-12.5}\right)\right]$$

$$= \left[0.05 + 0 + \left(2\frac{(1480)(8.625)}{[(20,000)(1)+(1480)(0.4)]}\right)\left(\frac{100}{100-12.5}\right)\right]$$

$$= 0.411\,\text{in.}$$

From ANSI pipe Table 7.2, select an 8 in. XS pipe. If available, an 8 in. line with a 0.438 in. thickness would be acceptable.

(6) Calculate wall thickness using ASME B31.8:

"Off plot" (outside the facility):

$$t = \frac{Pd_o}{2(FETS)}$$

$$= \frac{(1480)(8.625)}{2(0.72)(1.0)(1.0)(35,000)}$$

$$= 0.253\ \text{in.}$$

From ANSI pipe Table 7.2, select an 8 in. with a 0.277 in. wall thickness. With a slight derating, use an 8 in. with a 0.250 in. wall thickness.

"On plot" (inside the facility):

$$t = \frac{Pd_o}{2(FETS)}$$

$$= \frac{(1480)(8.625)}{2(0.6)(1.0)(1.0)(35,000)}$$

$$= 0.304 \text{ in.}$$

From ANSI pipe Table 7.2, select an 8 in. standard weight pipe. If available, use an 8 in. line with a 0.312 in. wall thickness.

Example 7.3b *Determining line size and wall thickness of a two-phase line (SI units)*

Given:

Flow rate: condensate = 5.30 m^3/h
Water = 1.52 m^3/h
Gas = 27,100 std m^3/h
SG condensate = 0.87
Water = 1.05
Gas = 0.85
Viscosity condensate and water = 0.003 Pa s
Gas = 1.3×10^{-5} Pa s
Inlet pressure = 6200 kPa
Temperature = 27 °C
Compressibility factor = 0.67
Fluid flows to a separator that operates at 5515 kPa. The MAWP of the line is 10,200 kPa.

Determine:

Choose a line size and wall thickness using the design criteria in

(A) ASME B31.3,
(B) ASME B31.8.

Solution:

(1) Establish design criteria.
V_{max} = 18 m/s
V_{min} = 3-4.5 m/s
ΔP_{Allow} = 600 kPa

(2) Calculate the erosional velocity:

The critical condition occurs at the lowest pressure. However, to be conservative, compute V_e at 6200 kPa.

From previous data, $\rho_m = 110.95 \text{kg/m}^2$ and

$$V_e = \frac{C}{(\rho_m)^{0.5}}$$

C	V_e
80	9.27 m/s
100	11.58 m/s
120	13.90 m/s
140	16.22 m/s

(3) Calculate the minimum diameter d_r:

$$d = \left[\frac{\left[11.9 + 413 + \left(\frac{ZRT}{P}\right)\right] Q_L}{V}\right]^{0.5}$$
$$= \frac{348.23}{V^{0.5}}$$

V	d_{min}
3.0 m/s	201.0 mm
4.5 m/s	164.2 mm
9.27 m/s	114.4 mm
11.58 m/s	102.3 mm
13.90 m/s	93.4 mm
16.22 m/s	86.5 mm

(4) Evaluate the pressure drop constraint.

From Example 6.10b, a 101.6 mm is not acceptable. The 152.4 mm line is marginal, while the 203.2 mm line is acceptable. Select the 203.2 mm line.

(5) Calculate wall thickness using ASME B31.3:

$$t = \left[t_c + t_{th} + \left(\frac{Pd_o}{2(SE + PY)}\right)\left(\frac{100}{100 - 12.5}\right)\right]$$
$$= \left[0.05 + 0 + \left(2\frac{(1480)(8.625)}{[(20,000)(1) + (1480)(0.4)]}\right)\left(\frac{100}{100 - 12.5}\right)\right]$$
$$= 10.44 \text{ mm}$$

From ANSI pipe Table 7.2, select a 203.2 mm XS pipe. If available, a 203.2 mm line with an 11.33 in. wall thickness would be acceptable.

(6) Calculate wall thickness using ASME B31.8:

"Off plot" (outside the facility):

$$t = \frac{Pd_o}{2(FETS)}$$
$$= \frac{(1480)(8.625)(25.4)}{2(0.72)(1.0)(1.0)(35,000)}$$
$$= 6.43 \text{mm}$$

From ANSI pipe Table 7.2, select a 7.04 mm wall thickness. With a slight derating, use a 203.2 mm with a standard weight wall thickness.

"On plot" (inside the facility):

$$t = \frac{Pd_o}{2(FETS)}$$
$$= \frac{(1480)(8.625)(25.4)}{2(0.6)(1.0)(1.0)(35,000)}$$
$$= 7.72 \text{ mm}$$

From ANSI pipe Table 7.2, select a 203.2 mm standard weight pipe.

7.2.8 Pressure ratings

7.2.8.1 Fittings, valves, and flanges

Piping fittings, valves, and flanges are designed and manufactured in accordance with several industry standards including API, ASTM, ASME, and Manufacturers Standardization Society (MSS). The pipe components are designed and manufactured to industry standards to ensure the consistency of the material properties and specifications, set uniform dimensional standards and tolerances, specify methods of production and quality control, specify service ratings and allowable pressure and temperature ratings for fittings manufactured to the standards, and provide interchangeability between fittings and valves manufactured to the standards.

Piping materials manufactured to these standards can be traced to the source foundry and the material composition verified. Material traceability is another important feature of standardization. Each fitting, valve, and flange can be certified as to the material, specification, and grade.

7.2.8.2 Pressure ratings

ASME B16.5 steel pipe flanges and flanged fittings have the following seven pressure classes: ASME 150, 300, 400, 600, 900, 1500, and 2500. Table 7.13 shows the minimum, nonshock working pressures for Material Group 1.1, which is the working group for most oil and gas piping and pipeline applications.

API Spec 6A prescribes the following seven pressure classes: 2000, 3000, 5000, 10,000, 15,000, 20,000, and 30,000. API 2000, 3000, and 5000 have the same dimensions as ASME 600, 900, and 1500, respectively. When an API flange is bolted to an ASME flange, the connection must be rated for the ASME pressure rating. Table 7.14 shows the temperature and pressure ratings for API specification fittings.

API flanges are required for extreme high pressures and are typically used for wellheads. ASME flanges are less costly and are more readily available than API flanges and are used in the production facilities. Typically, API flanges are used in the flow line near the wellhead, but ASME flanges are used downstream. Manifolds and production headers may use API or ASME, depending upon the operating conditions.

Table 7.13 Pressure ratings versus temperature for Material Group 1.1, classes 150, 300, 400, 600, 900, 1500, and 2500

Class	−20 to 100 T	200 °F
150	285	260
300	740	675
400	990	900
600	1480	1350
900	2220	2025
1500	3705	3375
2500	6170	5625

Pressure ratings for temperatures between 100 and 200 °F should be interpolated between the values at 100 and 200 °F. Refer to ANSI/ASME B76.5" for definition ol material groups and for specific pressure ratings for other material groups and temperatures.
Courtesy of ANSI/ASME.

Table 7.14 Pressure ratings versus temperature for API flanges

Table G1	
Temperature ratings	
Classification	Operating range (°F)
X	0 to 350
Y	0 to 650

Table G2									
Pressure/temperature ratings									
	Temperature (°F)								
	0 to 250	300	350	400	450	500	550	600	650
Rated	2000	1955	1905	1860	1810	1735	1635	1540	1430
Working	3000	2930	2860	2785	2715	2605	2455	2310	2145
Pressure (psi)	5000	4880	4765	4645	4525	4340	4090	3850	3575

For additional information, see API Spec 6A.
Courtesy of API.

7.2.9 Determination of pressure breaks

7.2.9.1 General considerations

Fluid flowing through a piping system can undergo pressure decreases by flowing through chokes and/or control valves. However, if flow were to stop, the pressure in the line would increase to the upstream pressure.

When fluid flows from a high-pressure source into a lower pressure system, there is a distinct point where the system could be subjected to the higher pressure by activation of an isolation valve. This distinct point is called a specification "pressure break"

point. Pipe valves and fittings upstream of this point must be designed to withstand the higher pressure.

The piping and equipment must be designed for the maximum possible source pressure that the system might experience. This means that any segment that can be isolated either intentionally or accidentally from a downstream relief device must be designed for the maximum upstream pressure to which it can be subjected. Typically, this "design" pressure will be set by the set pressure of an upstream relief device or the maximum pressure that can be developed by the upstream source (pump, compressor, or wellhead). Because pressure breaks occur at isolation valves, careful placement of isolation valves must be considered in multipressure piping system designs.

7.2.9.2 API RP 14J guidelines

The procedure for determining the wall thickness of straight pipe was explained earlier in this chapter. API RP 14J Design and Hazards Analysis for Offshore Production Facilities provides the following guidance for determining the proper maximum allowable pressure to use in designing a segment of a piping system and the location of specification breaks. This discussion describes a procedure for determining the design pressure for a specific segment of a piping system. The piping system must be designed to provide protection against overpressure from any improper opening or closing of a valve.

Consider the case of a well with a shut-in tubing pressure (SITP) of 10,000 psi (69,000 kPa) flowing through a choke to a series of successive separators to a tank.

The wellhead must be determined to withstand 10,000 psi (69,000 kPa) internal pressure, but the tank is incapable of withstanding pressures much in excess of one atmosphere. Clearly, there must be one or more locations in such a system where the design pressure (i.e., the maximum pressure to which the piping can be subjected) is higher on the upstream side than it is on the downstream side. These locations, called "pressure breaks," occur at valves, control valves, chokes, or other devices that can be shut to isolate one segment of the piping system from another.

Since overpressure of a piping system is extremely dangerous and could lead directly to personnel injury or death, the system must be designed to withstand the maximum pressure it could be subjected to under any circumstance of inadvertent operation of a manual valve or control. That is, we cannot assume that a knowledgeable operator would never open or close valves in a sequence that could overpressure a segment of the piping system; even knowledgeable operators make mistakes in logic or in tracing out piping to determine the correct valve to open or close. Similarly, we cannot depend on operational controls to function properly, since controls do fail and piping system failure due to overpressure can have very high costs.

7.2.9.3 Rules

When determining the location of pressure breaks, the following rules must be followed:

- Any manual valve can be either open or closed. Use whichever condition creates the highest pressure level for the system.

- Check valves may leak or fail open and allow communication of pressure from the high side to the low side. (Check valves should still be used to minimize backflow in case of a leak, but cannot be relied upon to prevent back pressure.)
- Control valves, including self-contained regulators, can be in either the open or closed position, whichever allows the piping segment to be exposed to the maximum pressure.
- Locked open (or closed) valves can be considered always open (or closed) if the lock and key are maintained in accordance with a proper lockout and tag-out procedure. A hazard analysis should be performed to determine if the risk associated with relying on the lockout and tag-out procedure is justified.
- Shutdown systems can be in bypass and, by themselves, do not provide sufficient protection from overpressure. The one exception is that API RP 14C allows the use of two completely independent shutdown sensors/isolation valve combinations (high-integrity pressure protection systems (HIPPSs)) on production flow line segments (see Volume 2—Safety Systems). HIPPS should be approached with caution after thorough consideration of other alternatives.

Pressure relief valves and rupture discs will always work because of the high reliability of their design. (In critical service, some operators require a backup relief valve or rupture disc to the primary relief device to increase reliability or to provide a spare.)

These rules are based on years of operating experience with many production facility piping systems and reflect an industry consensus that the probability of the assumption occurring is too high to justify the cost of failure. If one makes the assumption that no device will work to limit pressure, then it would be necessary to design the wellhead, separators, and tank for 10,000 psi (69,000 kPa). Therefore, one must assume that relief valves work and that if they are sized correctly, they will restrict the pressure in their portion of the system to the set pressure of the relief valve. This assumption is made because of the proved reliability of relief valves.

In some cases, such as for facilities designed in accordance with *API RP 14C*, a high-pressure shutdown sensor must fail before pressure rises to a relief valve set point. This provides greater reliability and further reduces the risk of overpressure.

In reality, the pressure in the piping system may exceed relief valve set pressure for a short period of time, while the relief valve is handling its full design load. The ASME Boiler and Pressure Vessel Code allows pressure buildup to *110-121%* of set pressure under certain conditions of relief. This overpressure is considered in the safety factors of piping wall thickness calculations and fitting class pressure ratings and need not be considered in determining the design pressure for the piping system.

It is imperative that system overpressure be prevented by a relief valve and not by a back-pressure control valve. Relief valves are designed for rapid opening, with proved flow coefficients and set points, which cannot inadvertently be adjusted. This is not true for back-pressure control valve, for which the response time, set point, and percent opening can be easily and inadvertently adjusted.

7.2.9.4 Procedure

To determine the location of pressure breaks, a complete piping and instrument diagram (PI&D) (sometimes called a mechanical flow diagram) is needed. This diagram should show schematically the process and the location of all equipment, valves, controls, and instrumentation.

Starting at the lowest pressure relief valve (normally the pressure vacuum valve on a tank), proceed upstream through the piping system until reaching a manual valve, control valve, or choke. Apply the four rules to determine the maximum pressure the upstream side of this valve can experience. If this is higher than the pressure rating of the downstream pipe, then a pressure break occurs at this point. If not, continue upstream to the next device in the system and apply the four rules until a pressure break is located. Continue upstream through each line in the process until all pressure breaks are located.

This procedure is best explained by an example. Figure 7.9 shows an example of spec break locations determined in this manner. The relief valve on the low-pressure separator protects it from seeing pressures in excess of 285 psi (1995 kPa).

Thus, the flanges and immediate piping around this vessel can be ASME class 150. Following the piping upstream to valve 4, it can be seen that this valve can be closed when valve 1 is open. Since the control valve and the check valve can communicate pressure, the maximum pressure valve 4 can be subjected to be set by the next relief valve upstream or 1480 psi (10,360 kPa). Thus, valves 1-4, as well as all the flanges and piping around the HP separator, must be rated ASME class 600.

Next, following the inlet from the LP separator upstream to the manifold valves, it is seen that all manifold valves could be closed, subjecting those on the flow lines from high-pressure wells to 5000 (35,000 kPa) and from other wells to their SITP. Following the inlet line from the HP separator upstream, pressure breaks are required as shown.

In Figure 7.10, a valve is installed at position 5. This requires the pressure breaks as shown. Valves B, D, and F must be rated 5000 API because of the possibility of 5, B, and D being closed when A, E, and F are open. This situation is not practical because of the 5000 API rating required for the control station. Two alternatives can be

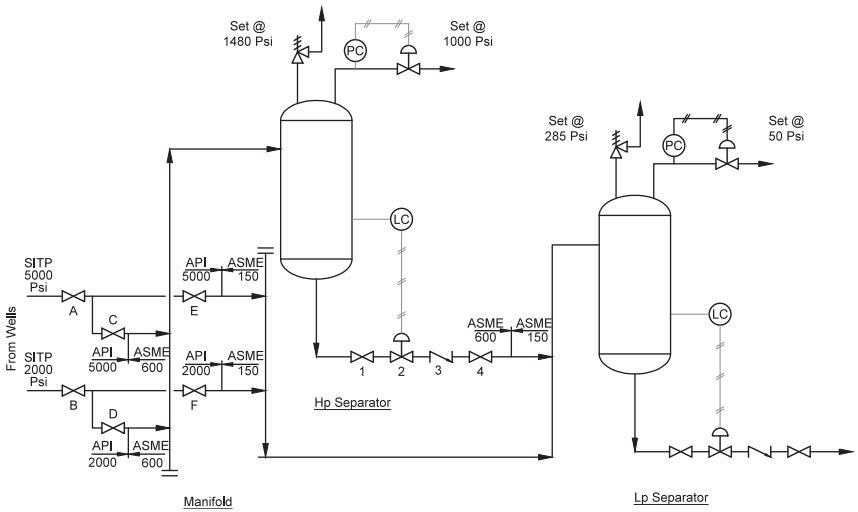

Figure 7.9 Flange and valve pressure—temperature rating changes (1 of 4).

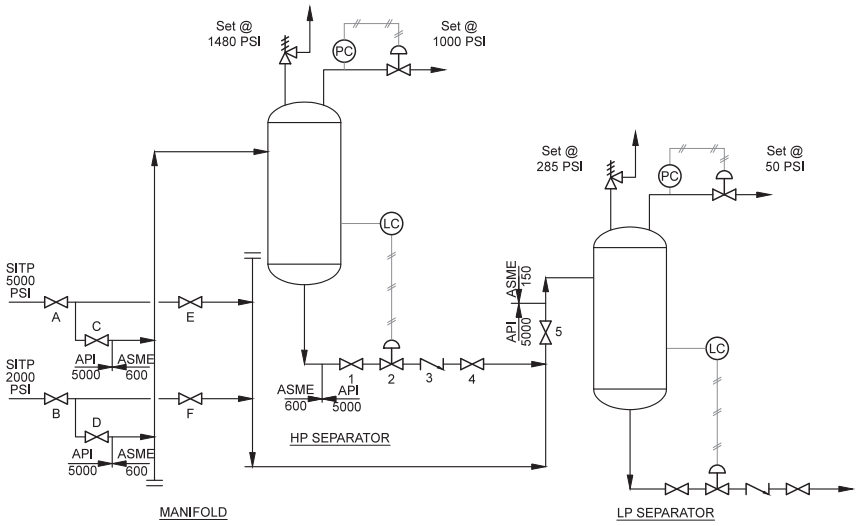

Figure 7.10 Flange and valve pressure—temperature rating changes (2 of 4).

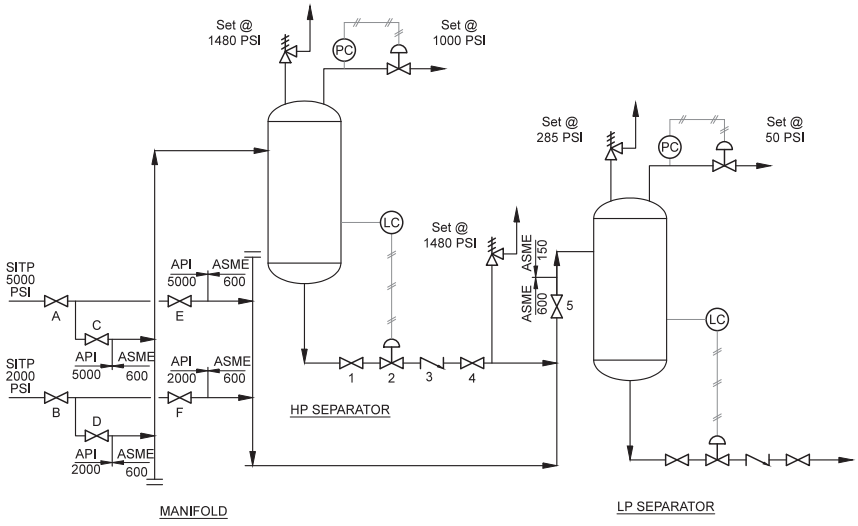

Figure 7.11 Flange and valve pressure—temperature rating changes (3 of 4).

proposed without violating any rules given in the previous subjects. These are shown in Figures 7.11 and 7.12. Figure 7.11 shows that the pressure rating of valves 1-4 does not need to be changed if the location of valve 5 is changed. Figure 7.12 shows an alternative pressure rating scheme brought about by adding a relief valve upstream of valve 5.

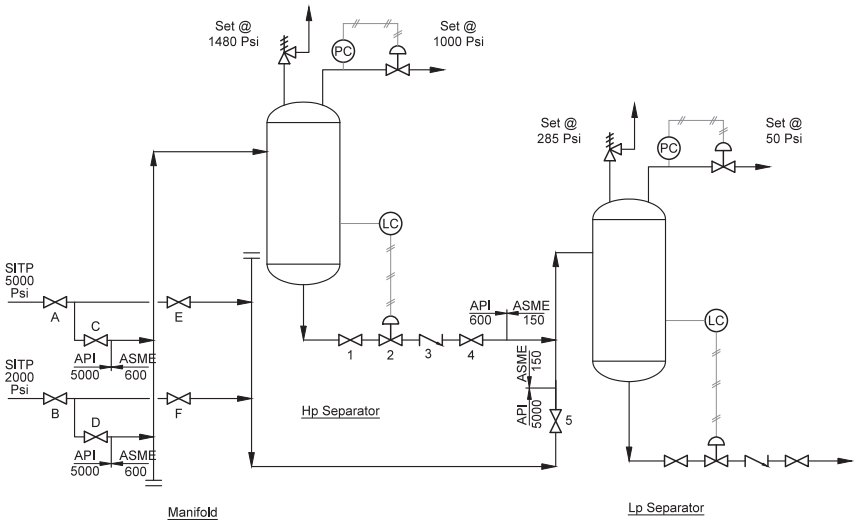

Figure 7.12 Flange and valve pressure—temperature rating changes (4 of 4).

These examples are shown to help to explain how to apply the rules given in the previous subjects and not to make any point regarding the proper way to design a specific situation. The important point is that in complex piping systems, care should be taken to follow the procedure and rules properly and to choose the pressure break locations carefully. Often, such an analysis leads to a reevaluation of the proper location of valves in a piping system.

7.2.10 Overview of piping design practices

7.2.10.1 General considerations

Designers should decide which specification best applies to the project and apply that specification to develop a safe, economical, and functional design. Many design problems that are encountered will be similar to previous projects. Every attempt should be made to analyze earlier, similar designs and to assess their good and bad points.

Time spent early in the project (front-end engineering) discussing an existing design with senior engineering and field personnel often can save many hours of design revisions and sometimes keep a system from being constructed that does not accomplish what it intended.

The remainder of this discussion focuses on design considerations for some systems frequently required in connection with surface facilities.

7.2.10.2 Information required for design

The design criteria and procedures for sizing pipelines and flow lines hold true for other lines including gas lift lines and oil/gas/water lines both permanent and

temporary. Before a pipeline can be designed, the following information should be determined:

- Length and location of line
- Volume, pressures, and temperatures of the fluid to be transported
- Maximum pressure drop that can be tolerated
- Terrain (including how heavily populated the area is, road crossings, and right-of-way problems)
- Time—how soon the line is needed
- Continuation of information that should be determined
- Corrosiveness (internal and external)
- Life of project
- Regulatory compliance requirements
- Safety (design) factor
- Availability of materials
- Cost of construction
- Budget or money available (economics)

Once the above information has been determined, it is possible to select the optimum size, weight, grade, and type of pipe for the project.

7.2.10.3 General line sizing considerations

The objective is to find the minimum pipeline diameter required for a given flow rate and pressure drop. Equations presented in Chapter 6 and this chapter should be utilized. In many instances, line sizing is dependent on factors other than pressure loss due to friction. For example, erosional velocity is one criterion used for sizing lines such as flow lines, production headers, and some process headers that handle two-phase flow. This chapter provides guidelines in designing two-phase flow.

7.2.10.4 Pressure test requirements

Pipelines must be hydrostatically tested before being placed in operation. The test pressure of each system should be based on the "weakest" pipe of the system.

7.2.10.4.1 ASME B31.3 requirements

Code requires leak testing of all piping systems, other than category D systems. For category D fluid service, the piping may be put into service without a leak test and examined for leakage during the initial operation of the system.

The hydrostatic test is conducted at a pressure, P_T, times the design pressure, P, times a temperature correction factor. The temperature correction factor compensates for the fact that the test may be conducted at a lower temperature, where the material has a higher strength than at the design condition. The equation is

$$P_T = 1.5PR_r \tag{7.15}$$

where

P_T = design gage pressure,

R_r = ratio of S_t/S or components without established ratings,
= ratio of the component rating at the test temperature to the component rating at component design temperature for components with established ratings,
=(R_r cannot be less than 1 and cannot exceed 6.5. Use 6.5 for ratios higher than that),
S = allowable stress at test temperature.

If the calculated test pressure results in a nominal pressure stress or longitudinal stress greater than the yield strength of the material at the test temperature or pressure more than 1.5 times the component rating at the temperature, the test pressure may be reduced to a value that does not exceed those limits.

7.2.10.4.2 ASME B31.4 requirements

Code requires testing of internal pressure piping based on percentage of specified minimum yield strength (SMYS). Code requires a 4 h hydrostatic test pressure not less than 1.25 times internal design pressure.

7.2.10.4.3 ASME B31.8 requirements

Code requires testing of internal pressure piping based on Code Tables 841.3.2.1 and 841.3.3.1. The following are the minimum guidelines for hydrostatic testing of gas transmission lines:

1.25 × MOP for Location Class 1, Division 1
1.10 × MOP for Location Class 1, Division 2
1.25 × MOP for Location Class 2
1.40 × MOP for Location Class 3
1.40 × MOP for Location Class 4

where

MOP = maximum operating pressure (psig).

7.2.10.4.4 Elevation adjustments

Test pressures must be adjusted for elevation differences. A common practice is to test the line using the aforementioned factors multiplied by the MAWP, rather than the MOP. If this is done, and the MOP is raised during the life of the line, it will not be necessary to retest the line. It is a good idea to test the line to 1.4 times the MAWP, as long as the maximum allowable test pressure (P_t) in Equation 7.15 is not exceeded.

7.2.10.5 Corrosion considerations

Common positive corrosion control practices include the following:

- Coating the exterior of the pipe.
- Cathodic protection.
- Removing corrosive elements from the gas.
- Using cement or plastic liners.
- Adding corrosion allowance (external corrosion: 0.05 in.; internal corrosion (where a liner is not used): 0.075 in.).

- Corrosion inhibitor injection systems are used in pipelines where pipe is not internally coated and where there is a possibility of the pipe wall being exposed to corrosive fluids. Inhibitor systems are used cocurrently with cathodic protection systems.

7.2.10.6 Expansion loops

Most pipe materials will expand and contract when subjected to temperature changes. Expansion loops provide sufficient flexibility to prevent thermal expansion and contraction from causing excessive stresses in the piping system. Expansion loops often are required in high-temperature gas well flow lines and gas and water injection lines. Design guidance for expansion loops can be found in the following:

- ASME B31.8, Paragraph 832
- Piping Engineering (1976) pages 141-155, published by Tube Turns Division of Chemetron Corporation
- Pressure Vessel and Piping Design—Collected Paper 1929-1995, published by ASME

Figure 7.13 illustrates an expansion loop detail designed to compensate for up to 24 in. of calculated expansion in a pipeline. Steel expands about 0.008 in./100 ft./°F. Thus, a steel pipeline that was installed at a temperature of 80 °F and operates at a temperature of 180 °F will expand about 0.8 in. for each 100 ft. of line. An expansion loop like the one shown in Figure 7.13 would be required approximately every 3000 ft. The line must be anchored midway between expansion loops.

The need for an expansion loop in underground piping may be unnecessary if most of the expansion will be taken up by the pipes snaking in a ditch. The design is not straightforward and requires sound engineering judgment.

7.2.10.7 Pig/scraper traps

Traps are installed at the ends of the large-diameter pipelines to allow the lines to be purged of accumulated water, corrosion products, and debris. Accumulated water in pipelines (especially gas) reduces the capacity of the line and promotes more rapid corrosion. Scraper traps and scrapers come in various shapes and sizes. Figures 7.14 and 7.15 illustrate typical field-fabricated traps for both the launching and receiving ends of a line. The need for scraper traps and the types of traps suitable depend on the individual line being installed. Figure 7.16 is a typical unilaunch sphere launching and sphere receiving equipment.

7.2.10.8 Flow line anchoring

ASME B31.8, Paragraphs 834 and 835, provides guidelines on the design and installation of flow line anchor blocks and supports. Anchor blocks are used in conjunction with expansion loops, near pulsating equipment to prevent excessive vibration, and wellheads and manifolds where expansion or contraction forces in the flow line might bend the wellhead or manifold. Figure 7.17 illustrates the construction details of a concrete anchor block for pipelines. To prevent thrust forces from damaging the pipe or fittings, thrust blocks are frequently used in connection with nonmetallic flow lines (Figure 7.18).

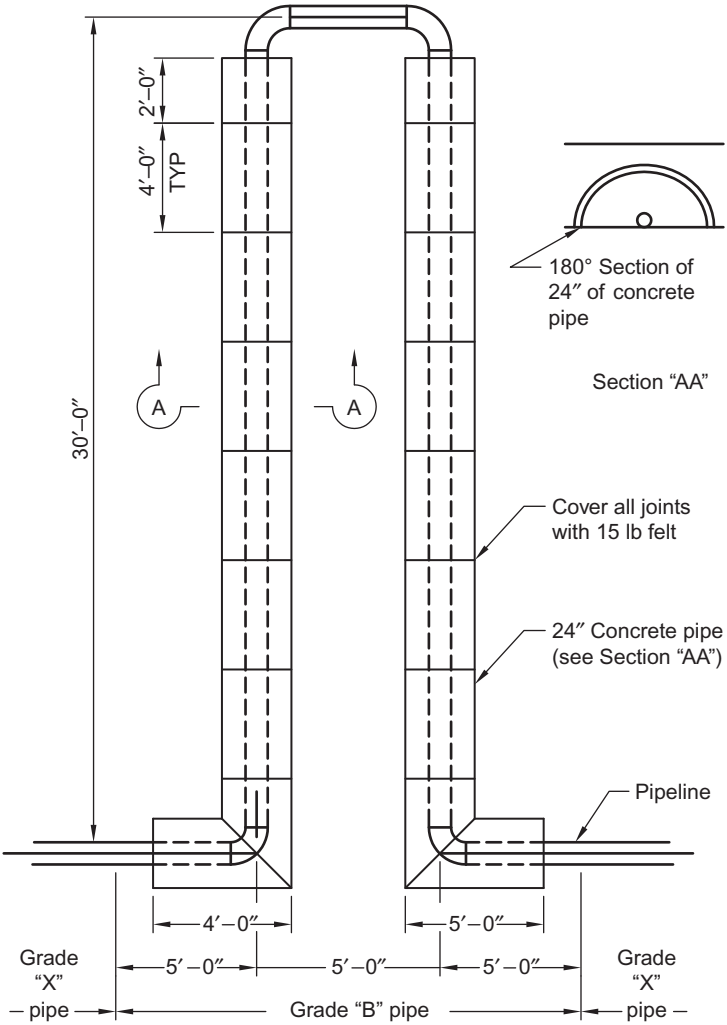

Figure 7.13 Expansion loop details for a 2-6 in. pipe.

7.2.10.9 Sand production

Sand can result in rapid cutting or erosion of pipe, valves, and fittings. If subsurface consolidation (gravel packing) is not practical or not satisfactory, steps must be taken to enable the surface facilities to handle the sand.

Common practices that can minimize sand cutting include the following:

- Installing hard-surfaced material (tungsten carbide sleeves) immediately downstream of places of large pressure drop, such as chokes and control valves. Ensuring that the installation incorporates a sufficient length of straight pipe (10 pipe diameters) to dissipate fluid turbulence

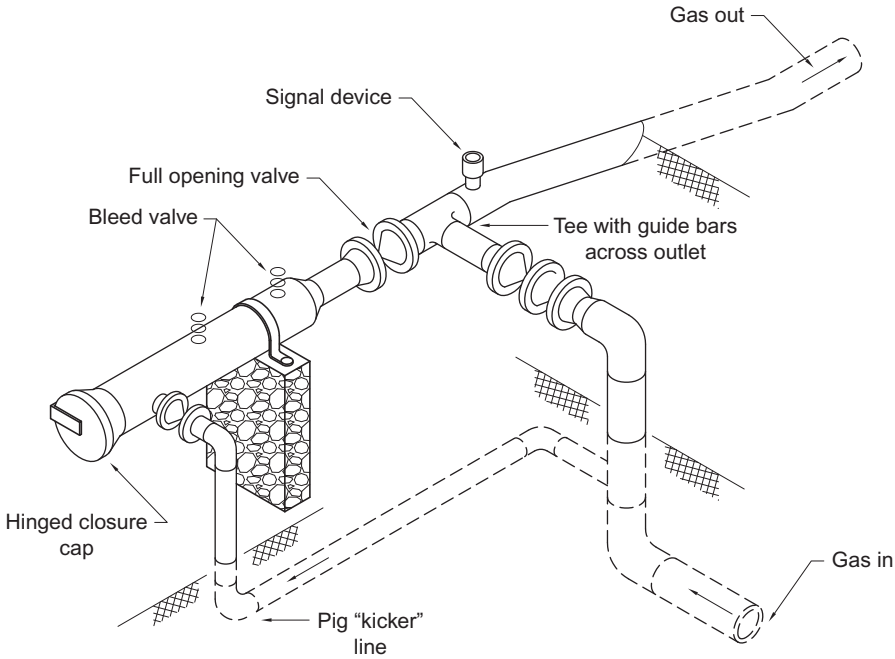

Figure 7.14 Typical field-fabricated trap for launching end of line.

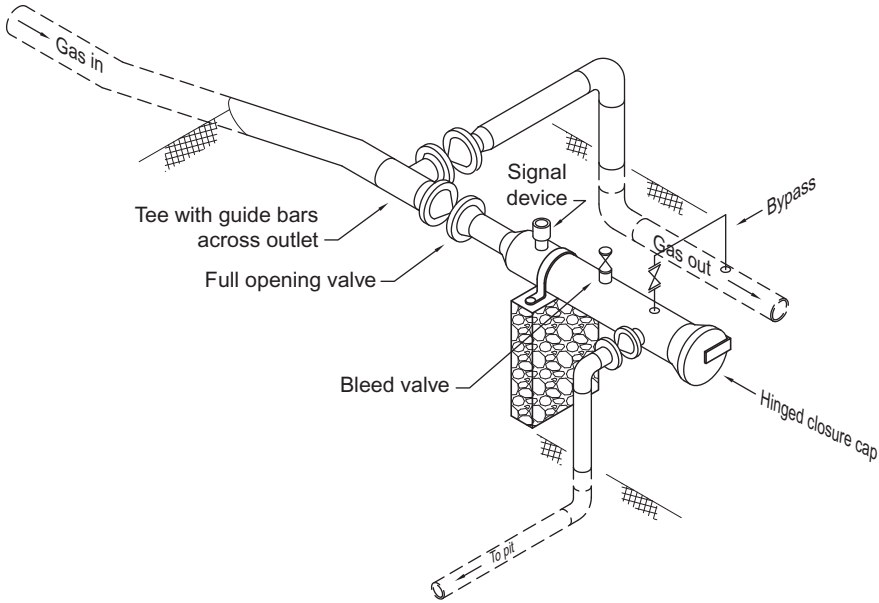

Figure 7.15 Field-fabricated trap for receiving end of line.

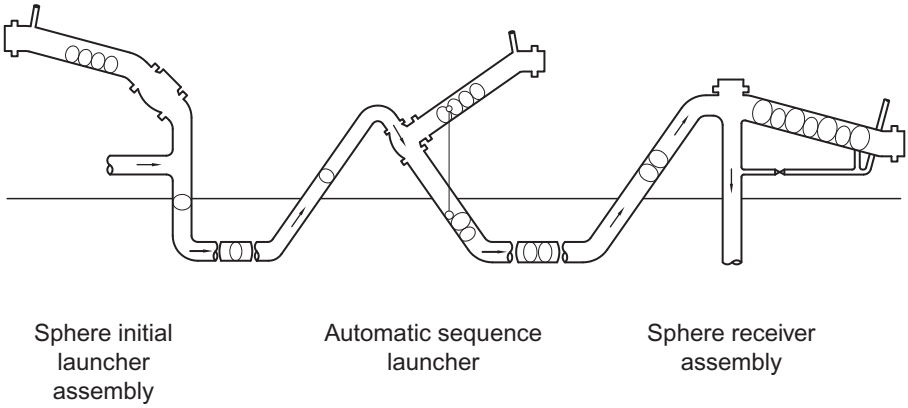

Figure 7.16 Unilaunch sphere launching and sphere receiving equipment.

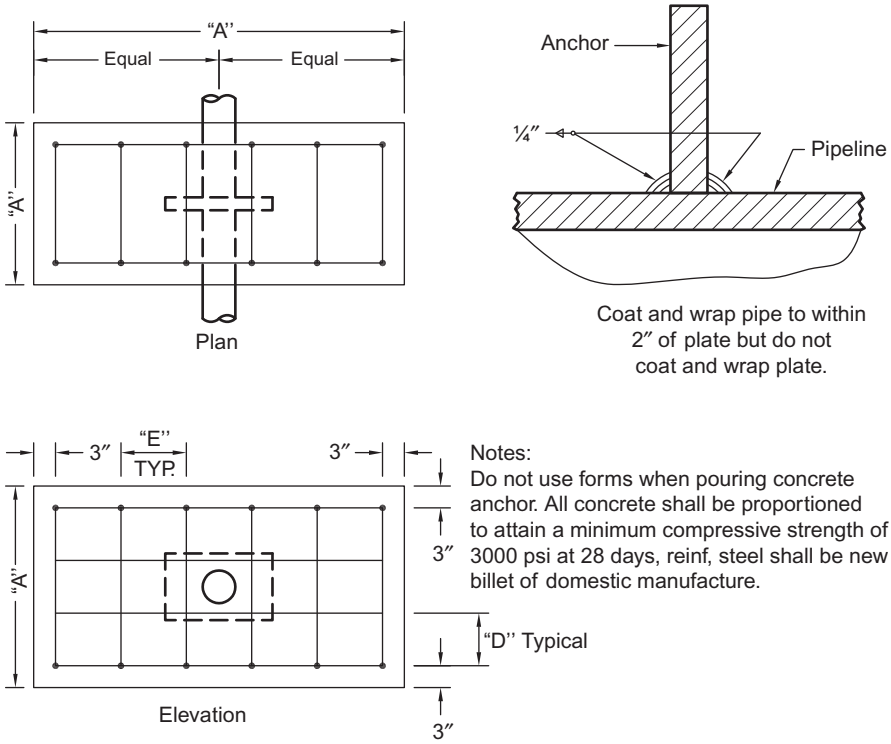

Pipe	Dimensions					Re–Bar	Plate
Size	A	B	C	D	E	Size	Size
4″ & Under	5′– 0″	1′– 4″	2′– 0″	6″	11″	No.4	½″ × 10″ Square
6″ & 8″	6′– 0″	2′– 0″	2′– 6″	8″	13″	No.4	⅝″ × 16″ Square
10″ & 12″	6′– 0″	2′– 0″	3′– 0″	10″	13″	No.4	¾″ × 18″ Square
14″ & 16″	8′– 6″	2′– 6″	5′– 0″	11″	9″	No.6	¾″ × 20″ Square

Reinforcing note: Contractor may use all straight bars or a combination of straight and bent bars.

Figure 7.17 Construction details of a concrete anchor block for pipelines.

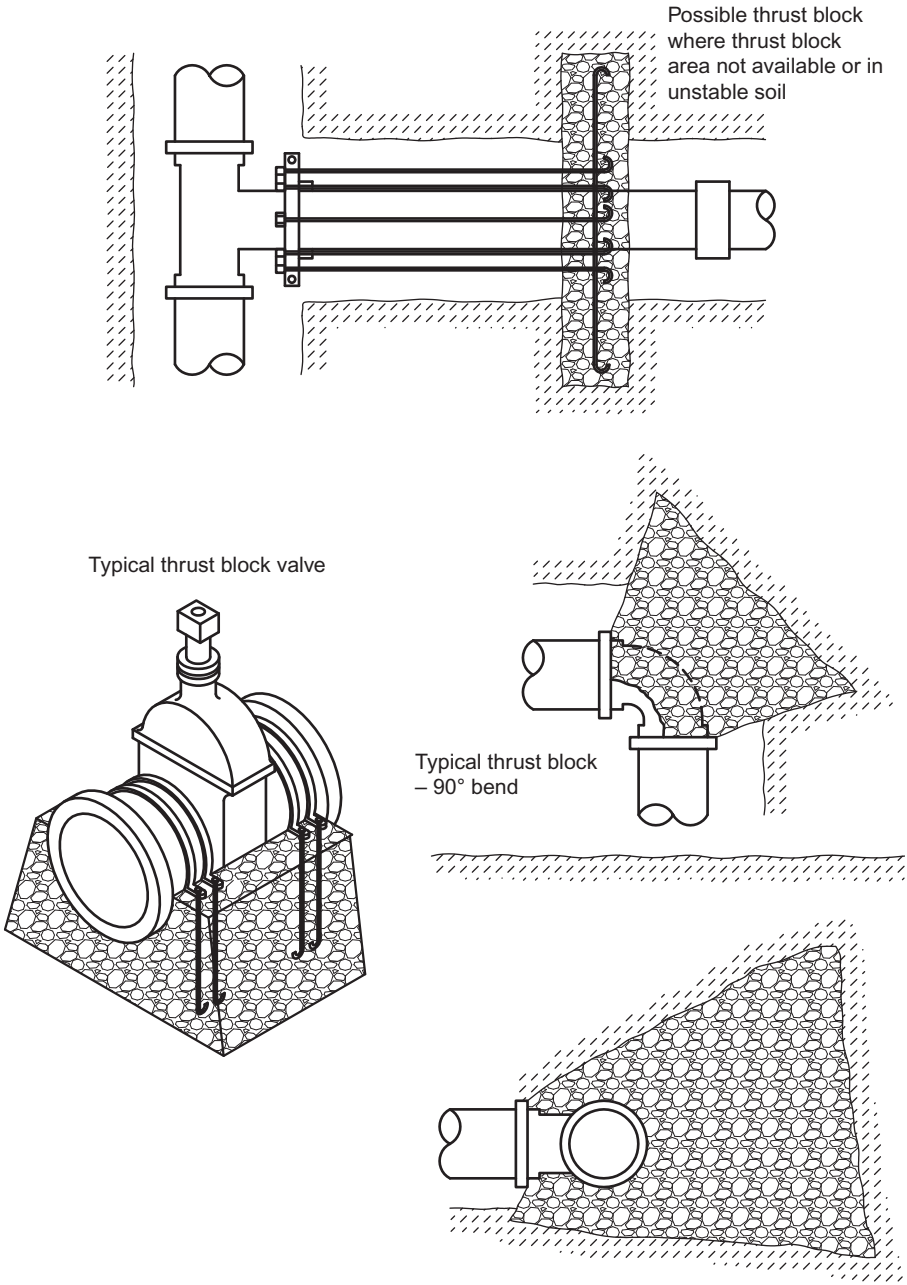

Figure 7.18 Nonmetallic flow line anchoring.

- Using tungsten carbide trim and seat in control valves
- Installing large-diameter pipe and fittings to minimize velocity, where practical
- Installing a sand probe immediately downstream of chokes or control valves to monitor sand erosion. When the turbulent action of the sand erodes the probe, the well or system can be automatically shut-in before major equipment items cut out
- Installing a minimum number of fittings such as elbows or tees, because fittings are generally more susceptible to sand cutting than straight pipe
- Installing centrifugal-type separators to remove sand from the flow stream

7.2.10.10 Additional design considerations

In addition to the items discussed, other design considerations may be relevant to a particular design such as the following:

- Determining the need for a pipeline right-of-way and evaluating the ecological effect to the extent deemed necessary by management
- Installing a check valve in the flow line within a pipe joint's length of the wellhead to minimize backflow of well effluent into the well during shutdown periods
- Ensuring that the design and installation are in compliance with the latest requirements of the authority having jurisdiction (MIGAS, PETRONAS, BSSE, NNPC, PTTEP, DOE, etc.)
- On flowing wells that require frequent choke changing, installing a valve immediately downstream of the tree choke to eliminate bleeding pressure from the entire flow line to change chokes
- Installing "thermowells" in the wellhead piping to obtain accurate flowing wellhead temperature data
- Considering the installation of a "battery limit" flow line valve of isolation of the well site without undue use of wellhead manifold valves
- Documenting all flow line installations with "as-built" drawings and updating them continuously

7.2.10.11 Manifolds

7.2.10.11.1 Overview

A manifold is a combination of pipes and valves used to combine streams from several sources and direct combined flow to the appropriate equipment. Manifolds are generally located where many flow lines come together such as the following:

- Tank batteries (gathering station)
- Meter site
- Separation stations
- Offshore platforms

Production manifolds are the most common type of manifolds used in production operations. They accept the flow streams from several wells and direct the combined flow to test separators, production separators, tanks, etc.

Manifolds vary in complexity from a simple wellhead manifold, which combines casing and tubing flow and directs it on to a production manifold at a control location, to a complex manifold that is found at complex LNG plants.

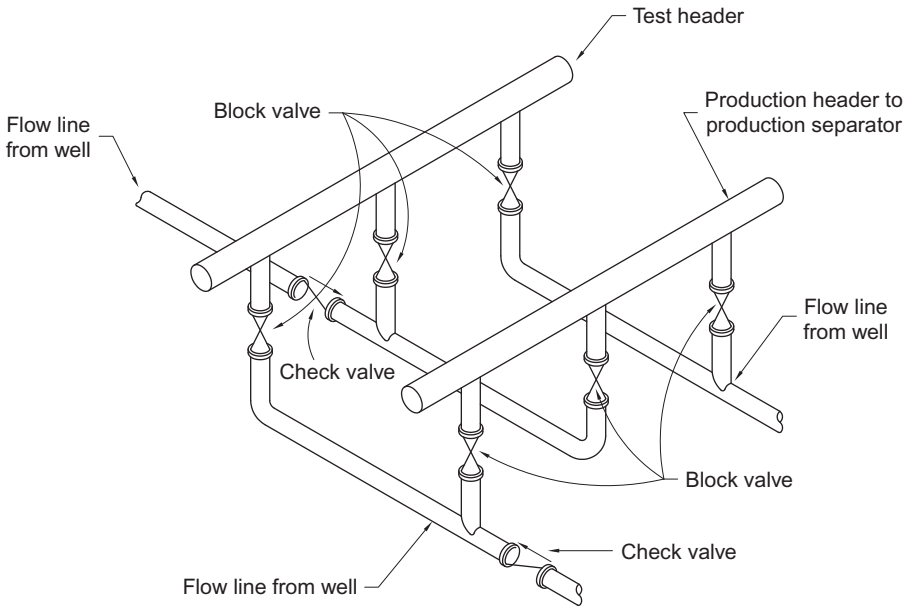

Figure 7.19 Basic elements of a typical manifold.

The basic elements of a production manifold (Figure 7.19) are the following:

- Production header
- Test header
- Valves
- Flow lines

7.2.10.11.2 Manifold components

7.2.10.11.2.1 Headers Headers refer to the pipe associated with, or passing through, the manifold. Headers can accept fluid from any one of several inlets to the manifold by means of valves. From the header, the fluid is directed to the appropriate production equipment. The most common headers include the following:

- High-pressure production
- Low-pressure production
- Test header
- Blowdown header

A schematic showing an automatic well test (AWT) header and a nonautomatic routine well test (NART) header is shown in Figure 7.20.

7.2.10.11.2.2 Chokes Chokes may be installed at the manifold on the individual well flow lines entering the manifold or at the wellhead. Low-pressure installations usually have the chokes installed on the inlet to the manifold.

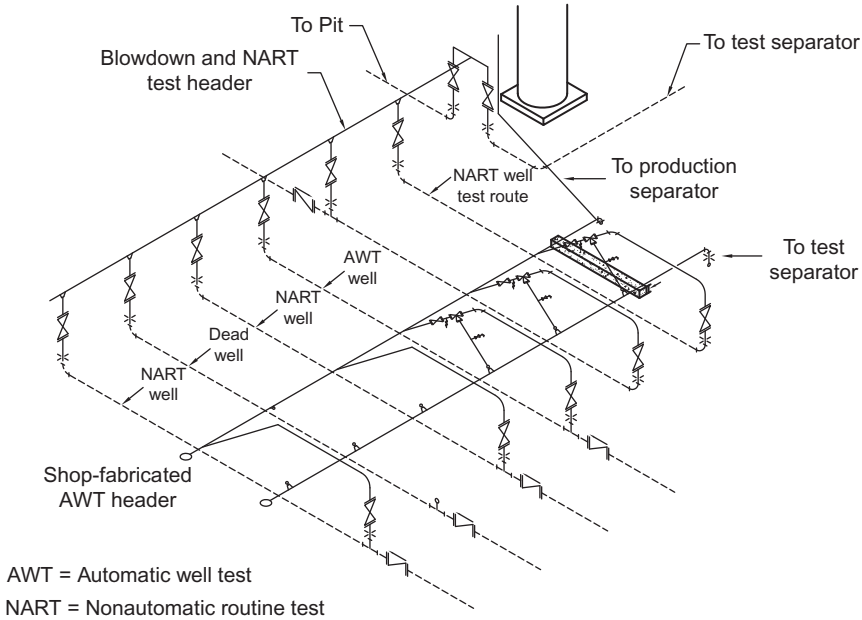

Figure 7.20 Typical "AWT" header.

7.2.10.11.2.3 Diaphragm operator on choke Diaphragm operators on chokes provide an automatic means for controlling the pressure downstream of the choke. Downstream pressure is sensed by a pressure controller, which controls the instrument air pressure transmitted to the diaphragm operator. They are commonly used on gas wells when, to increase liquid recovery, the operator tries to take as large a pressure drop across the choke as possible without causing hydrates to form.

7.2.10.11.2.4 Check valves Check valves minimize stronger wells from back-flowing into weaker ones. They are normally installed upstream of the choke, and thus, their working pressure must be at least as great as the choke's.

7.2.10.11.2.5 Inlet block valves Inlet block valves are installed at the inlet to each well's flow line to permit shutting in each well separately. Valves may be either manual or automatic. The valve body must be capable of withstanding full well SITP unless a PSV is installed. Valve trim should be "quick-opening" so that maximum capacity is reached at a relatively small proportion of the total available travel. Commonly used manual valves include ball, lubricated plug, and gates.

7.2.10.11.2.6 Header block valves Header block valves should be provided in the manifold that will route the production from each well, to either the production header or the test header. Valves may be either manual or automatic, but, in either case, they should have as large a port opening as possible.

7.2.10.11.2.7 Other apparatuses Pressure gauges should be installed on each flow line so that local readings of each flow line can be made. Relief valves are only required when the SITP exceeds the MAWP of the manifold or header. Drain/vent connections should be provided to allow draining and venting of all portions of the manifold. Sample connections should be provided to allow sampling of the individual well streams and also of the combined production.

7.2.10.11.3 Manifold design

Primary considerations in manifold design include the following:

- Piping arrangement
- Fluid velocity
- Pressure drop
- Pressure rating

7.2.10.11.3.1 Piping arrangement Piping routing should be as short and straight as possible. Quarter-turn valves are preferred for ease of operation. Above 6000 psig working pressure, only gate valves are generally available. Manifold branch connections should be in accordance with Table 7.15. The terminus of the manifold should be blind flanged to provide a cushion area and allow for possible future expansion. Manifold design should provide easy access to each valve for operational purposes and for easy removal.

7.2.10.11.3.2 Fluid velocity Single-phase liquid lines should be sized for the following:

- Maximum velocity of 7 ft./s at maximum flow rates
- Minimum velocity of 3 ft./s to keep the lines swept clean of sand and other solids

Gas/liquid two-phase lines should be sized for the following:

- Maximum velocity of 15 ft./s.
- Minimum velocity of 10 ft./s to minimize "slugging" of separator equipment. This velocity is particularly important on long lines with elevation changes (as on an offshore platform).

7.2.10.11.3.3 Pressure drop Manifold headers should be sized in accordance with the criteria appearing in Section 7.2.10.12 of this section for gas and liquid hydrocarbon piping. For all types of manifolds, the valves and risers are usually the same size as or one size smaller than the flow line connected to the riser. Care should be taken to ensure that valves are large enough to minimize noise and velocity-type erosion problems. Valve manufacturers should be consulted when these matters are being considered.

7.2.10.11.3.4 Pressure rating Manifold valves, risers, and headers should be designed for the maximum pressure expected. As shown in Figure 7.21, all valves and headers, even those on the low-pressure systems, must be designed for the MAWP of the high-pressure header. The manifold system may or may not be designed for the maximum shut-in pressure that the connected wells might reach. For example, if any of the connected wells can achieve a 2000 psig shut-in pressure and the designer wants

Table 7.15 Branch connection schedule

	Run size															
Branch size		1/2	2/4	1	1 1/2	2	2 1/2	3	4	6	8	10	12	14	16	18
	1/2	SWT	SWT	SWT	SWT	6SC	6SC	6SC	6SC	6SC	6SC	6SC	6SC	6SC	6SC	6SC
	2/4		SWT	SWT	SWT	SOL	6SC	6SC	6SC	6SC	6SC	6SC	6SC	6SC	6SC	6SC
	1			SWT	SWT	SOL	SOL	SOL	6SC	6SC	6SC	6SC	6SC	6SC	6SC	6SC
	1 1/2				SWT	TR	SOL	SOL	SOL	6SC	6SC	6SC	6SC	6SC	6SC	6SC
	2					T	SOL	SOL	SOL	WOL	WOL	WOL	WOL	WOL	WOL	WOL
	2 1/2						RT	RT	RT	WOL	WOL	WOL	WOL	WOL	WOL	WOL
	3						T	T	T	RT	WOL	WOL	WOL	WOL	WOL	WOL
	4								T	RT	RT	WOL	WOL	WOL	WOL	WOL
	6									T	RT	RT	WOL	WOL	WOL	WOL
	8										T	RT	RT	RT	RT	RT
	10											T	RT	RT	RT	RT
	12												T	RT	RT	RT
	14													T	RT	RT
	16														T	RT
	18															T

T, straight tee (butt weld); RT, reducing tee (butt weld); TR, straight tee and reducer or reducing tee; WOL, weldolet (schedule of branch pipe); SOL, sockolet 6000# forged steel; SWT, socketweld tee; 6SC, 6000# forged steel socketweld coupling (3/4" and smaller threadolets or screwed couplings may be used for sample, gauge, test connection, and instrumentation purposes).

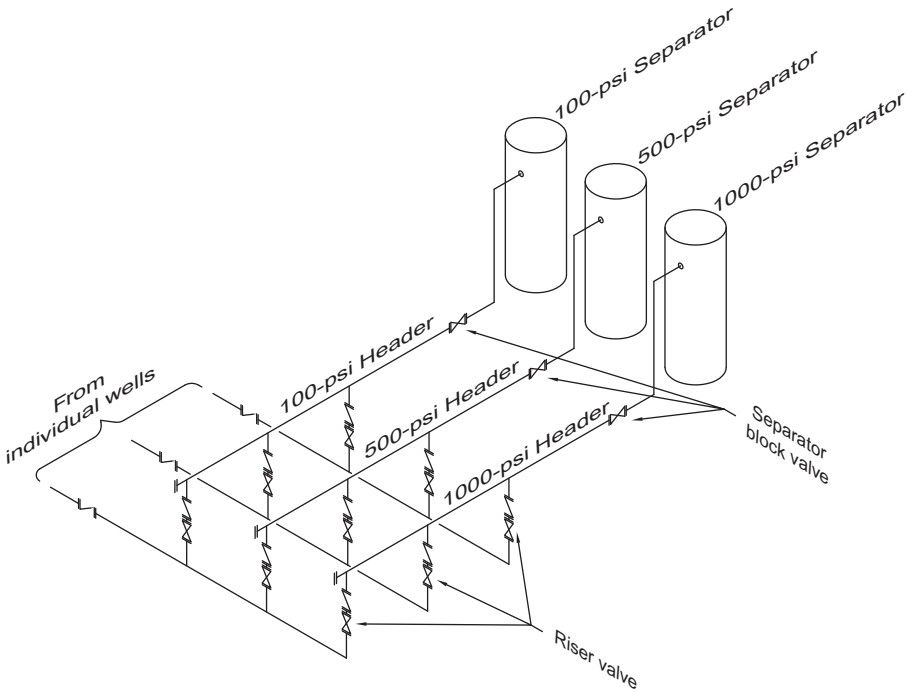

Figure 7.21 Pressure design of manifolds.

the capability of shutting in the well at the manifold, then the risers, riser valves, and flow lines must be designed for 2000 psig.

Offshore manifolds should be designed to withstand full wellhead SITP, or a pressure relief valve (PRV) should be installed. It is not uncommon to find onshore manifolds designed for less than the SITP without a PSV. Thus, it is necessary to shut in the well at the wellhead, always leaving at least one of the riser valves open, so that a leaking wellhead valve will not overpressure the flow line and manifold.

7.2.10.11.4 Manifold fabrication

Under ideal conditions, simple manifolds maybe fabricated satisfactorily in the field. Prefabrication in an efficient shop is preferred in most cases. This is especially true for complex AWT headers having electric and pneumatic equipment and pipe and block valves. The advantages of prefabrication are the following:

- Working conditions for the fitters and welders are more satisfactory.
- Better welding equipment and handling devices are more likely to be available.
- Supplies, such as welding rod, fittings, and pipe, are more readily available.
- The job customarily goes more quickly.
- Facilities for testing the various components and the completed manifold are better.
- Inspection facilities are much more satisfactory.
- Drawings that will make future changes easier and faster to accomplish are much more complete. Many times in the field, drawings are not even made.

The only readily apparent advantage of field fabrication is the close liaison that can be maintained between the operator and the fabricator or contractor.

7.2.10.12 Plant piping systems

7.2.10.12.1 General line sizing

7.2.10.12.1.1 Gas piping Gas piping is usually sized by the Weymouth equation with the following criteria in terms of permissible pressure drop per 100 ft. of equivalent length of pipe:

Compressor suction and discharge lead lines:

- 1/8 psi at operating pressures below 50 psig
- 1/4 psi at operating pressure of 50 psig and above

Compressor suction headers:

- 1/8 psi at operating pressure below 50 psig
- 1/4 psi at operating pressure of 50 psig and above

Compressor discharge headers:

- 1/4 psi at all operating pressures

All other lines:

- 1/2 psi at all operating pressures

An exception to this schedule is permitted if greater pressure drops are needed for a specific purpose, such as pulsation dampening, or if large pressure drops are to be taken in regulators.

7.2.10.12.1.2 Liquid hydrocarbon piping Liquid lines are usually sized by the Hazen-Williams equation, with a surface roughness constant, C, of 140. Pressure drops should not exceed 1 psi per 100 ft. of equivalent length of pipe. An exception to this standard is permitted where large pressure drops are to be taken in regulators as in high-pressure rich oil piping. In such cases, the line size would be governed by the erosional velocity.

7.2.10.12.1.3 Water piping Water lines are usually sized by the Hazen-Williams equation with a surface roughness constant, C, of 100. Piping should be sized for a maximum pressure drop of 1 psi per 100 ft. of equivalent length of pipe or for a maximum velocity of 7 ft./s, whichever requires the larger pipe. An exception is pump suction lines, which should be limited to a pressure drop of 1 ft. of flowing liquid per 100 ft. of equivalent length of pipe.

7.2.10.12.1.4 Glycol/amine piping Glycol/amine lines are usually sized using the Hazen-Williams equation, with a surface roughness constant, C, of 70. The maximum pressure drop is 1 psi per 100 ft. of equivalent length of pipe.

7.2.11 Review questions

1. Velocity limitations become more important _____
   a. for pipe carrying corrosive fluids
   b. for lines carrying abrasive particles
   c. for lines with bends and fittings
   d. all of the above
   e. A and C only
2. Design a flow line for a gas condensate completion. The staff reservoir engineer has given you the following information:
   a. Initial well characteristics:
   SITP: 5500 psig
   Q_g: 15 MMSCFD, $S = 0.65$
   Q_c: 50 bbl/MMSCF, $SG = 0.80$
   FTP: 4500 psig
   FTT: 120 °F
   b. Depletion well characteristics:
   Q_g: 10 MMSCFD
   Q_c: 20 bbl/MMSCF
   Q_w: 1500 BPD, $SG = 1.08$
   FTP: 1500 psig
   c. Your company design standards require that the flow line be designed to withstand wellhead pressure.
   d. Due to existing piping constraints, this flow line will have the following components:

Long-radius elbows	4
Full opening ball valve	1
Tee run	1
Swing check valve	1
Vessel inlet contraction	1
Pipe	150 ft.

   e. Suggested procedure:
   1. Draw a graph for pressure *vs.* time and production *vs.* time.
   2. Draw a schematic of piping system.
   3. Determine inside diameter.
   (a) ΔP considerations
   (b) Velocity considerations
   (c) Minimum (prevents solids deposition)
   (d) Maximum (noise, CO_2, and corrosion inhibition)
   (e) Erosional velocity
   4. Determine the equivalent length of pipe for the selected diameter.
   5. Determine which piping code applies and then calculate the minimum wall thickness.
   (a) ASME B31.3
   (b) ASME B31.4
   (c) ASME B31.8
   6. Select a standard size pipe and weight or schedule.

3. A 6 in. standard wt ($ID = 6.065$) gas pipeline 16.95 miles (89,496 ft.) long transports gas at 81 °F (541°R), $\mu_g = 0.02$ cp, $S = 0.70$, and $Z = 0.92$ with an entry pressure of 430 psia and an outlet pressure of 135 psia. Assume a pipeline efficiency of 92%.
Determine the predicted flow rates horizontally using
(a) Weymouth equation,
(b) Panhandle "B" equation,
(c) General gas equation.
Determine the adjusted flow rate if the pipeline inlet is raised 650 ft. above the outlet.

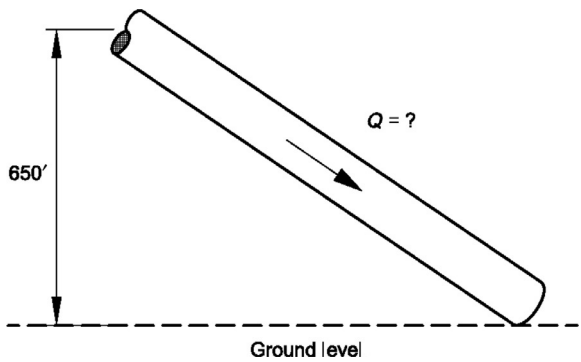

4. A 24 in. two-phase pipeline was installed to transport natural gas and crude oil from an offshore platform to a production facility onshore. The design basis is as follows:
$Q_g = 1200$ MMSCFD
$P_1 = 1215$ psia
$P_2 = 1115$ psia
$T_{AVG} = 65$ °F
$Qc_{(inlet)} = 40$ bbl/MMSCFD
$Qc_{(outlet)} = 70$ bbl/MMSCFD
$H_{(upstream)} = 600$ ft.
$H_{(downstream)} = 200$ ft.
$S = 0.7$
$SG = 0.81$
$Z = 0.76$
Length = 70 miles
As expected, production estimates by the reservoir engineers were optimistic. The actual production rates achieved were only 50% of design. Calculate the actual pressure drop in the system. Assume P_2 remains the same.

5. Calculate the equivalent length of the piping system shown below. Pipe size is 10 in.

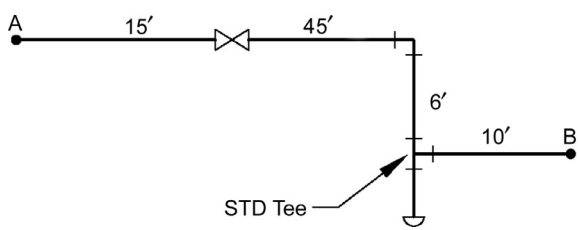

6. The piping code that governs the transportation of liquid petroleum is ASME _____
   a. B31.3
   b. B31.4
   c. B31.8
   d. B31.1
   e. B31.6
7. If an oil well has a potential for a gas completion, then the flow lines should be designed according to ASME _____
   a. B31.3
   b. B31.4
   c. B31.8
   d. B31.1
   e. B31.6
8. A water injection line should be designed according to ASME_____
   a. B31.3
   b. B31.4
   c. B31.8
   d. B31.1
   e. B31.6
9. (True or false) Well flow lines normally carry fluids in two-phase flow, while process site piping normally contains single-phase fluids.
10. What are the principal differences between how design pressure is calculated under ASME B31.8 and how design pressure is calculated under ASME B31.4?
11. (True or false) Safety is ensured by always testing steel pipe to its yield point before it is put into service.
12. (True or false) Design safety factors can vary with location and adjacent exposures.
13. (True or false) Multiphase line flow rates must be factored upward to account for slug surges.
14. (True or false) After calculating the required line diameter, the actual diameter ordered should be the next larger common size.
15. An onshore crude pipeline, with a length of 47 miles (75 km), must be designed for a flow capacity of 100,000 bbl/day. Crude will be received by a storage tank at the end of the pipeline. The density and viscosity of the crude are 42° API and 0.01 Pa s, respectively. The ambient temperature is 70 °F (20 °C).

    The effects of water cut on these parameters may be ignored for the purpose of this exercise. The pipeline inlet pressure must not exceed 880 psig (60 barg) and the minimum outlet pressure is specified at 75 psig (5 barg). The elevation difference between the pump and the storage tank bottom is 500 ft. (150 m) (uphill), and the maximum liquid level in the tank is 65 ft. (20 m).

    Pipelines are available in the following diameters:

Nominal diameter	Internal diameter
12 in. (300 mm)	12.40 in. (315 mm)
14 in. (350 mm)	13.58 in. (345 mm)
16 in. (400 mm)	15.55 in. (395 mm)
18 in. (450 mm)	17.52 in. (445 mm)
20 in. (500 mm)	19.49 in. (495 mm)

The pipe wall roughness should be taken as 0.03 mm. The pump efficiency can be assumed to be 90%. The pump suction pressure is 15 psia (1 bara).

(a) Calculate whether a 16 in. pipeline is suitable for this duty.

(b) Calculate the pumping power requirement in watts (nearest integer).

16. A gas export pipeline from an offshore platform is to carry 1.5×106 s m^3/day of dehydrated gas. It has been proposed to use stockpiled 12″ line pipe from a previous project 50 miles (80 km), which was canceled recently. The maximum compressor discharge pressure available for gas export is 880 psig (60 barg), and the delivery requirements of the onshore plant are 295 psig (20 barg).

Additional data:
Sea temperature = 77 °F (25 °C)
Inlet gas temperature = 95 °F (35 °C)
Length = 47 miles (75 km)
Pipe internal diameter = 12.4 in. (315 mm)
Roughness (ε) = 0.03
Mole weight (M) = 19.5 kg/kmol
Gas viscosity (μ) = 0.011 mPa s (cP)

(a) Calculate whether the 12″ stockpiled pipe is suitable for this project.

17. A gas condensate export pipeline for the Balikpapan field, offshore east Borneo, has been sized at 12 in. (nominal) operating at an inlet pressure of 2770 psia (190 bara) and temperature of 113 °F (45 °C). The line runs from the new subsea completion manifold center to an existing platform some 28 miles (35 km) away, which, like Balikpapan, is in 313 ft. (95 m) of water over a sandy seabed of uncertain stability.

The external corrosion is expected to be insignificant. The product is "sweet" containing CO_2 at 0.218 psi (0.015 bar) partial pressure. For this reason, an internal corrosion allowance of 0.12 in. (3 mm) shall be included.

Design data:
P_{des}: 2770 psia (190 bara)
T_{des}: 113 °F (45 °C)
Outer diameter: 12.75 in.
Internal corrosion allowance: 0.12 in. (3 mm)
API X-52 yield stress: 359 MN/m^2
υ (Poison's Ratio): 0.3
E (Young's modulus): $210 \times 10^9 N/m^2$

Determine the required nominal wall thickness based on hoop stress for X-52 steel, and include an allowance for internal corrosion. Note that a design factor of 0.72 is to be applied for consistency with the ASME B31.8 design code.

(a) Determine the required pipe wall thickness to two decimal places.

Further Reading

[1] M. Frankel, Facility Piping Systems Handbook, McGraw Hill, Inc., New York, ISBN 0-07-021891-9, 1996.
[2] Pipe Fitters Handbook, Grineell Supply Sales Company, 1966.
[3] M.L. Nayyar, Piping Handbook, McGraw-Hill, Inc., ISBN 0-07-046881-8.
[4] NAVCO Piping Datalog, National Valve and Manufacturing Company, Pittsburgh, PA.

[5] E. Avallone, T. Baumeister, Marks' Standard Handbook for Mechanical Engineers, McGraw-Hill, ISBN 0-07-004123-7.
[6] Codes and Standards Training Institute (CASTI), ASME Piping Codes.
[7] ASME B31.1, Standard for Power Piping, ASME, New York, 2012.
[8] ASME B31.3, Standard for Process Piping, ASME, New York, 2012.
[9] ASME B31.4, Standard for Liquid Transportation Systems for Hydrocarbons, Liquid Petroleum Gas, Anhydrous Ammonia and Alcohols, ASME, New York, 2012.
[10] ASME B31.8, Standard for Gas Transmission and Distribution Piping Systems, ASME, New York, 2012.
[11] API RP 14E, Recommended Practice for the Design and Installation of Offshore Production Platform Systems, API, Washington, DC, 2007.
[12] ASME B16.5, Standard for Steel Pipe Flanges and Flanged Fittings NPS ½ Through NPS 24 Metric/Inch, ASME, New York, 2003.
[13] API Specification 6A, Specification for Wellhead and Christmas Tree Equipment, 19th ed., API, Washington, DC, 2004.
[14] ASME B16.11, Standard for Forged Steel Fittings, Socket Welding, and Threaded, ASME, New York, 2012.
[15] NACE MR-01-75, Standard Material Requirements—Metals for Sulfide Stress Cracking and Stress Corrosion Cracking Resistance in Sour Gas Oilfield Equipment for Sulfide Stress Cracking Resistant Metallic Material for Oilfield Equipment, NACE, Houston, 2012. Sections 3 and 5.
[16] The 2013 ASME Boiler and Pressure Vessel Code, Section VIII, IX, ASME, Fairfield, New Jersey, 2013.
[17] ASME SPEC 6F, Technical Report on Performance of API and ASME End Connections in a Fire Test According to API Specification 6A, third ed., API, Washington, DC, 2012.
[18] ASME SPEC 6FA, Specification for Fire Testing Valves, third ed., API, Washington, DC, 1999.
[19] API RP 14J, Recommended Practice for Design and Hazard Analysis of Offshore Production Facilities, second ed., API, Washington, DC, 2001.
[20] API RP 14C, Recommended Practice for Analysis, Design, Installation, and Testing of Basic Surface Safety Systems for Offshore Production Facilities, seventh ed., API, Washington, DC, 2001.
[21] ASME Standard A53, Standard for Seamless Carbon Steel Pipe for High Temperature Service, ASME, New York, 2002.
[22] ASME Standard A106, Standard for Seamless Carbon Steel Pipe for High Temperature Service, ASME, New York, 2002.
[23] API Standard 5L, Specification for Line Pipe, 19th ed., API, Washington, DC, 2004.
[24] ASME Standard B16.9, Standard for Factory Made Wrought Steel Butt-Welding Fittings, ASME, New York, 2013.
[25] ASME Standard A105, Standard for Carbon Steel Forgings for Piping Applications, ASME, New York, 2012.
[26] ASME Standard A234, Standard Specification for Pipe Fittings of Wrought Iron Carbon Steel and Alloy Steel for Moderate and Elevated Temperatures, ASME, New York, 2012.
[27] ASME Standard A420, Standard Specification for Pipe Fittings of Wrought Carbon Steel and Alloy Steel for Low Temperature Service, ASME, New York, 2012.
[28] ASME Standard A694, Carbon and Alloy Steel for Pipe Flanges, Fittings, Valves and Parts for High Pressure Transmission Services, ASME, New York, 1998.
[29] API Standard 6D, Standard Specification for Steel Gate, Plug and Check Valves for Pipeline Service, API, Washington, DC, 1998.

[30] API Standard 6H, Standard Specification for End Closures, Connections, and Swivels, API, Washington, DC, 1998.
[31] MSS Specification 44, Specification for Steel Pipeline Flanges, Manufacturer's Standardization Society of the Valves and Fittings Industry Inc., Vienna, Virginia, 1998.
[32] MSS Specification 75, Specification for High Test Wrought Butt Welding Fittings, Manufacturer's Standardization Society of the Valves and Fittings Industry Inc., Vienna, Virginia, 1998.
[33] NACE Standard MR01-76, Standard Specification for Metallic Materials for Sucker Rod Pumps for Corrosive Oilfield Environments, NACE, Houston, 2000.
[34] NACE RP 200, Recommended Practice for Steel Cased Pipeline Practices, NACE, Houston, 2003.
[35] NACE RP 572, Recommended Practice for Design, Installation, Operation, and Maintenance of Impressed Current Deep Ground Beds, NACE, Houston, 2003. Sections 3 and 5.
[36] API Standard 1104, Standard Specification for Welding of Pipelines and Related Facilities, 19th ed., API, Washington, DC, 1999. API Standard 571, Standard Specification for Piping Code: Inspection, Repair, Alteration and Rerating of In-Service Piping Systems, second ed., API, Washington, DC, 1999.
[37] API Standard 574, Standard Specification for Inspection Practices for Piping System Components, second ed., API, Washington, DC, 1999.
[38] B. Wilson, Detail Engineering and Layout of Piping Systems, second ed., San Francisco, CA, 2010, ISBN: 928-1-926633-18-3.
[39] A. Parisher Roy, A. Rhea Bobert, Pipe Drafting and Design, third ed., Gulf Professional Publishing, Houston, TX., 2012.
[40] C. Becht IV, Process Piping: The Complete Guide to ASME B31.3, third ed., ASME Press, New York, 2009.
[41] D.R. Sherwood, J. Whistance Dennis, The Piping Guide, Syentek Book Company, San Francisco, CA, 1991.
[42] Piping Engineering, Tube Turns Inc., sixth ed., 1986.
[43] L.-.C. Peng, T.-.C. Peng, Pipe Stress Engineering, ASME Press, New York, 2009.
[44] B. Silowash, Piping Systems Manual, McGraw Hill, New York, NY, 2010.
[45] Control Valve Handbook, Fisher-Rosemount, 1999.
[46] K.E. Arnold, M.I. Stewart, Surface production operations, in: Design of Gas-Handling Systems and Facilities, vol. 2, Elsevier, Boston, Mass, 1999. Chapter 13-Pressure Relief.
[47] K.E. Arnold, M.I. Stewart, in: Petroleum Engineering Handbook, in: Facilities and Construction Engineering, vol. III, Society of Petroleum Engineers, Houston, TX, 2007. Chapter 10-Safety Systems.

Relief, vent and flare disposal systems

8

8.1 Introduction

A relief, vent, or disposal system is an emergency system for discharging gas during abnormal conditions, by manual or controlled means or by an automatic pressure relief valve (PRV) from a pressurized vessel or piping system, to the atmosphere to relieve pressure in excess of the maximum allowable working pressure (MAWP) or design pressure. The relief system may include the relief device, the collection piping, flash-back protection, and a gas outlet. A scrubbing vessel should be provided for liquid separation if liquid hydrocarbons are anticipated. The relief-system outlet may be either vented or flared. If designed properly, vent or flare emergency-relief systems from pressure vessels may be combined.

Some facilities include systems for depressuring pressure vessels in the event of an emergency shutdown. The depressuring system control valves may be arranged to discharge into the vent, flare, or relief systems. The possibility of freezing and hydrate formation during high-pressure releases to the atmosphere should be considered.

There are three main engineering considerations when designing or modifying a relief system:

- Determining the relief requirements of individual pieces of equipment and selecting the appropriate devices to handle the imposed loads
- Designing a relief header system that will handle the imposed loads or expansion modifications
- Defining reasonable total relief loads for the combined relief header or disposal system and designing an appropriate disposal system with minimum adverse impact to personnel safety, plant (facility)-process system integrity, and the environment

The above considerations are interrelated in such a way that makes it impossible to establish a procedural guideline that would be valid for most cases. The design of one portion of a relief system must be considered in light of its effects on the relief system.

8.1.1 Sizing the pressure relief device

The most difficult factors for specifying a relief device are determining the limiting cause of pressure relief, determining the relief load and properties of the discharge fluid, and selecting the proper relief device. When the loads are known, the sizing steps are straightforward. API Standard 520, Part 1 and sections contained in this chapter, provides equations for determining the relief valve orifice area for vapor, liquid, and steam. The size of the PRV should be checked for the following conditions.

Surface Production Operations. http://dx.doi.org/10.1016/B978-1-85617-808-2.00008-0
Copyright © 2016 Elsevier Inc. All rights reserved.

8.1.1.1 Blocked discharge

One design condition for sizing of a PRV is to assume that it must handle the total design flow rate (gas plus liquid) into the component. It is possible to isolate a process component or piping segment for maintenance by blocking all inlets and outlets. On start-up, all outlet valves could be left closed inadvertently. If the inlet source can be at a higher pressure than the MAWP of the process component, only a properly sized PRV could keep the process component from rupturing as a result of overpressure.

8.1.1.2 Gas blowby

On tanks and low-pressure vessels normally receiving liquids from higher-pressure upstream vessels, the maximum flow rate through the valve often is determined by gas blowby. This situation occurs when the level controller or level control valve of the upstream vessel fails in the open position or a drain valve from an upstream vessel fails in the open position, allowing liquid and/or gas to flow into the component evaluated. Under blowby conditions, both the normal liquid and gas outlets on the component being evaluated are functioning properly. However, the gas flow into the component could greatly exceed the capacity of the normal gas outlet. The excess gas flow must be handled by the relief valve to keep from exceeding the component's MAWP. Gas-blowby conditions also can occur when a pressure regulator feeding a component fails in the open position, creating a higher than designed inlet flow rate of gas.

Gas-blowby rate is the maximum that can flow given the pressure drop between the upstream component and the component being evaluated. In computing the maximum rate that can flow because of pressure drop, consideration should be given to the effects of control valves, chokes, and other restricted orifices in the line. A more conservative approach would be to assume that these devices have been removed or have the maximum-sized orifice that could be installed in the device.

8.1.1.3 Fire/thermal exposure

The pressure in process components exposed to the heat from a fire will rise as the fluid expands and the process liquid vaporizes. For tanks and large low-pressure vessels, the need to vent the liberated gas may govern the size of the vent or relief valve. Fire sizing a PRV only keeps pressure buildup to less than 120% of the MAWP. If the component is subjected to a fire for a long time, it may fail at a pressure less than the MAWP because a metal's strength decreases as temperature increases.

On components that can be isolated from the process, it is possible for the process fluid contained in the component to be heated. This is especially true for cold (relative to ambient) service or when the component is heated (such as a fired vessel or heat exchanger). It is also true for compressor cylinders and cooling jackets. The PRVs on such components should be sized for thermal expansion of the trapped fluids. This normally will not govern the final size selected unless no relief valve is needed for the other conditions.

8.2 Relief device selection

8.2.1 Determining individual relief loads

There are a number of industry standards, codes, and recommended practices that provide guidance in the sizing, selection, and installation of relief devices and systems. The American Society of Mechanical Engineers (ASME) Pressure Vessel Code, Section VIII, Division 1, Paragraph UG-127, lists the relief-valve requirement; the American Petroleum Institute (API) RP 520, Part 1, provides an overview of the types of relief devices, causes of overpressure, relief-load determination, and procedures for selecting and sizing relief devices; API RP 520, Part 2, provides guidance on the installation of relief devices; and API RP 521 provides guidance on the selection and design of disposal systems.

8.2.2 Causes of overpressure

The most common causes of overpressure in upstream oil and gas operations are blocked discharge, gas blowby, and fire. When the worst-case relief load is caused by a control valve failing to open (blocked discharge), the relief device should be sized with full-sized trim in the control valve, even if the actual valve has reduced trim. When the worst-case relief load is caused by gas blowby, the relief device should be sized with full-sized trim in the smallest valve in the liquid-outlet line, even if the actual valve has reduced trim. Many vessels are insulated for energy savings. Thermal insulation limits the heat absorption from fire exposure as long as it is intact. It is essential that effective weather protection be provided so that insulation will not be removed by high-velocity fire-hose streams.

8.2.3 Types of pressure relief devices

(*Note:* Many of the figures and tables presented in this section are modifications of those presented in API Standard 520, Part 1 and 2 "Sizing, Selection, and Installation of Pressure-Relieving Devices in Refineries.")

The two primary types of relief devices are the *PRV* and *rupture disk*.

8.2.3.1 Pressure relief valves

A PRV is fitted with a disk closed by a spring generally rated 10% above the service pressure. The fluid exerts it pressure below the disk; therefore, it is critical to install the PRV inlet nozzle on the process equipment (see Figure 8.1). The three basic types of PRV are conventional spring-loaded, balance spring-loaded, and pilot-operated.

8.2.3.1.1 Conventional spring-loaded PRVs designed for gas/vapor service applications

A conventional PRV (see Figures 8.2–8.5) is a self-actuated spring-loaded PRV that is designed to open at a predetermined pressure and protects a piping system or a process vessel from overpressure by relieving fluid from that vessel or piping system. The

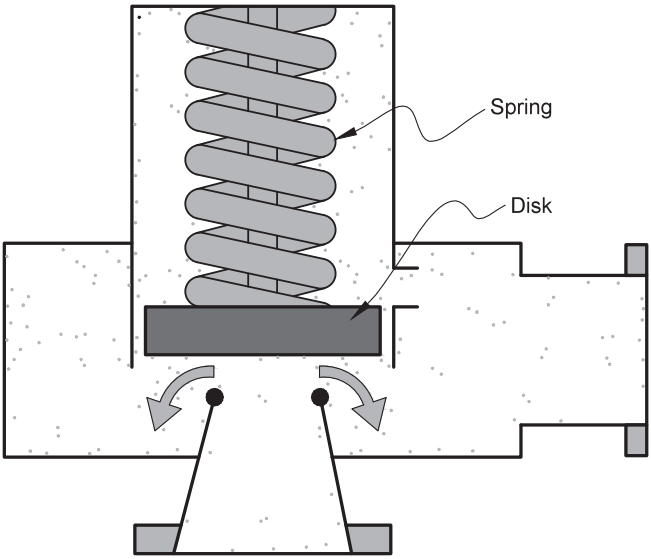

Figure 8.1 Schematic of a spring-loaded PRV.

valve shown in Figure 8.5 is commonly used for thermal relief valve applications. The basic elements of a spring-loaded PRV include the following:

- Inlet nozzle connected to the piping system or vessel to be protected
- Movable disk that controls flow through the nozzle
- Spring that controls the position of the disk

Under normal operating conditions, the pressure at the inlet is below the set pressure and the disk is seated on the nozzle preventing flow through the nozzle.

Spring-loaded PRVs are referred to by a variety of names, such as safety valves, relief valves, and safety relief valves. These names have been traditionally applied to valves for gas/vapor service, liquid service, or multiphase applications, respectively. The more generic term, PRV, is used in API Standard 520, Part 1 "Sizing, Selection, and Installation of Pressure-Relieving Devices in Refineries," and as such is used in this text and is applicable to all three.

The operation of a conventional spring-loaded PRV is based on a force balance (see Figure 8.5). The spring load is preset such that it is equal to the force exerted on the closed disk by the inlet fluid when the system pressure is at the set pressure of the valve. When the inlet pressure is below the set pressure, the disk remains seated on the nozzle in the closed position. When the inlet exceeds the set pressure, the pressure force on the disk overcomes the spring force and the valve opens. When the inlet pressure is reduced to the closing pressure, the valve recloses.

During normal operations, the valve is closed as shown in Figure 8.6a. The system or vessel pressure is acting against the disk surface area "A," which is resisted by the downward spring force. As the system pressure approaches the set pressure of the value, the seating force between the disk and nozzle approaches zero.

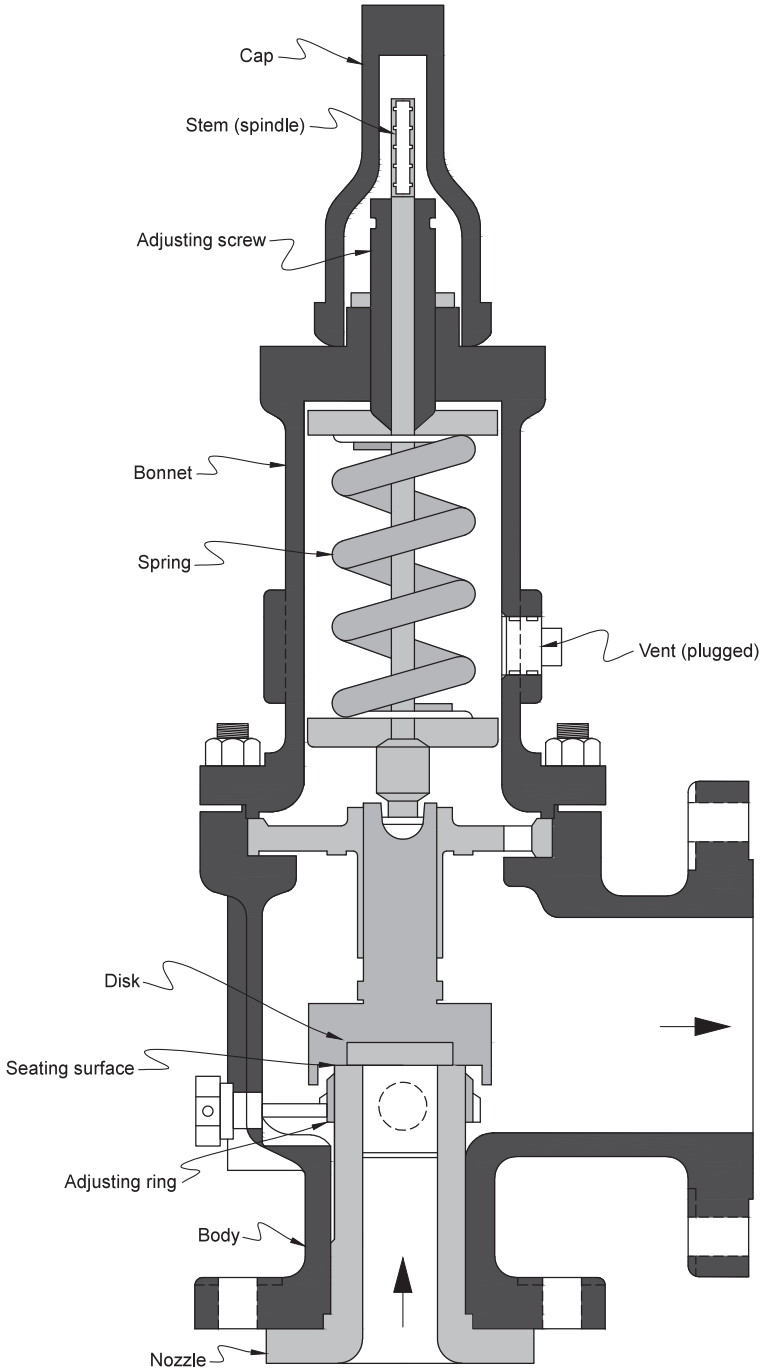

Figure 8.2 Conventional PRV with a single adjusting ring for blowdown control. (Courtesy of API Standard 520, Part 1)

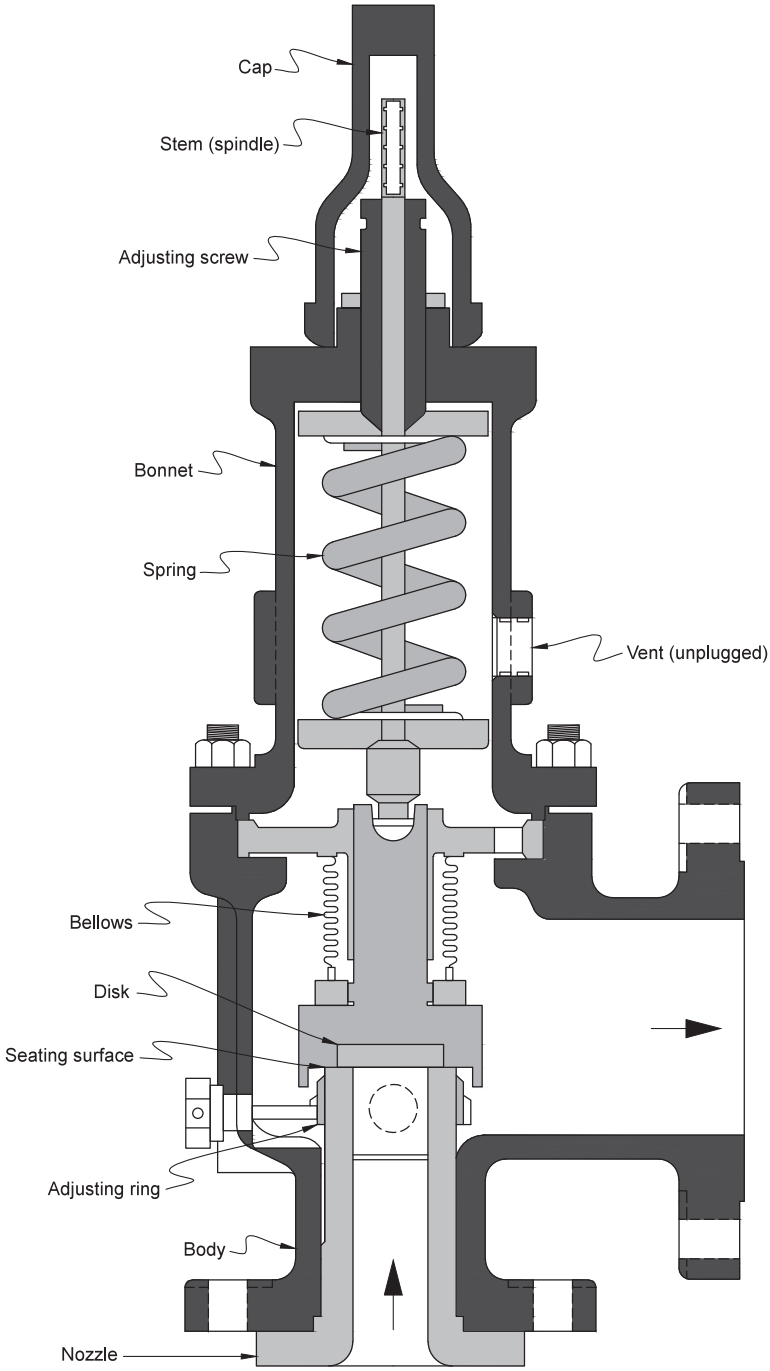

Figure 8.3 Balanced-bellows PRV.
(Courtesy of API Standard 520, Part 1)

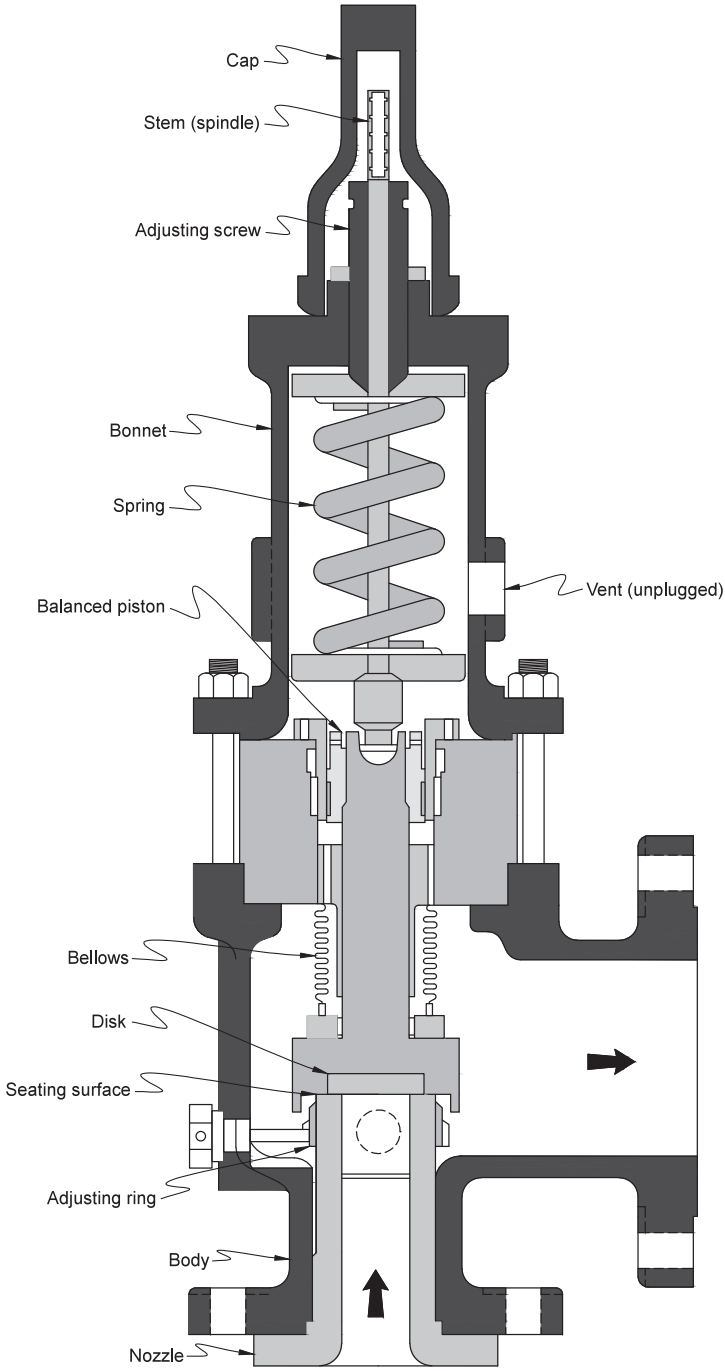

Figure 8.4 Balanced-bellows PRV with an auxiliary balanced piston. (Courtesy of API Standard 520, Part 1)

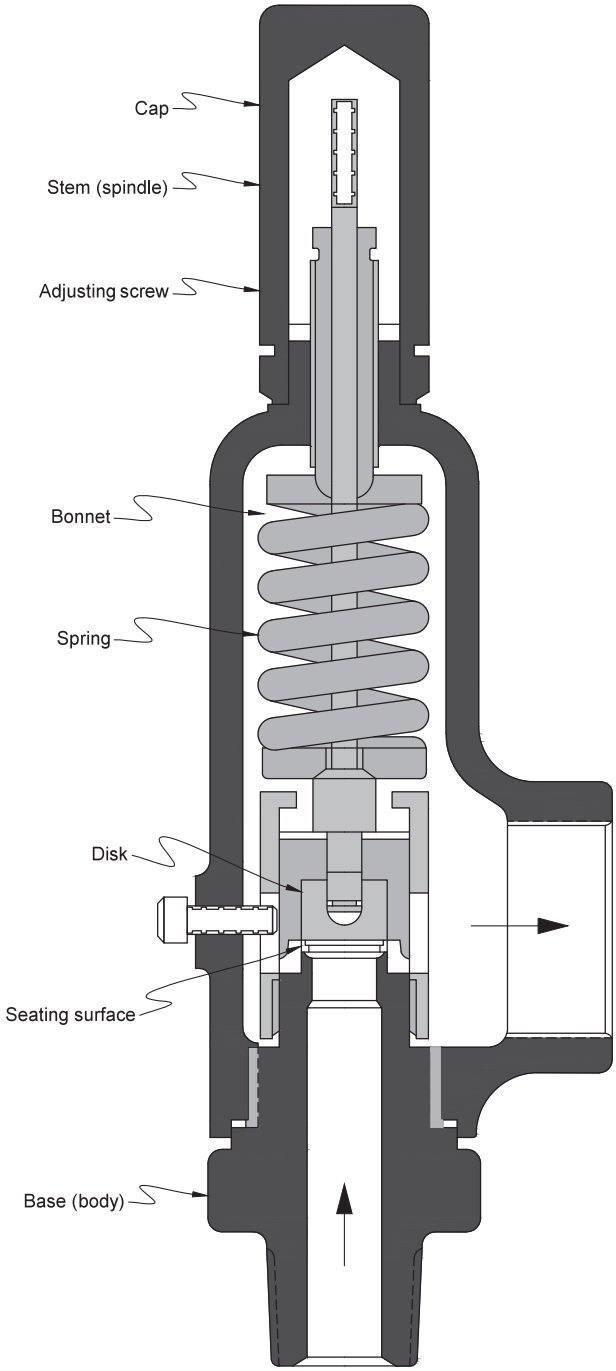

Figure 8.5 Conventional PRV with threaded connections.
(Courtesy of API Standard 520, Part 1)

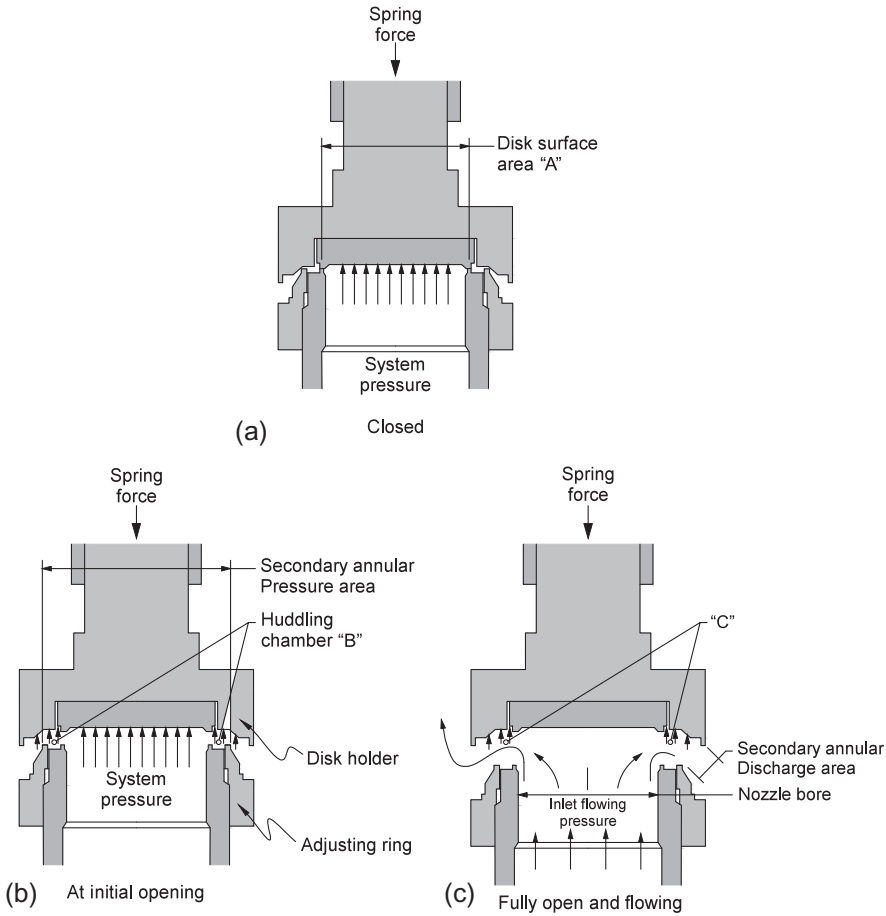

Figure 8.6 PRV operation-vapor/gas service.
(Courtesy of API Standard 520, Part 1)

In vapor or gas service, it is not uncommon for the valve to "simmer" before it will "pop." When the vessel pressure closely approaches the set pressure, fluid will audibly move past the seating surfaces into the huddling chamber "B." Due to the restriction of flow between the disk holder and the adjusting ring, pressure builds up in the huddling chamber B (see Figure 8.6b). Since pressure now acts over a larger area, an additional force, commonly referred to as the expansive force, is available to overcome the spring force. By adjusting the adjusting ring, the opening in the annular orifice can be altered, thus controlling the pressure buildup in the huddling chamber B. This controlled pressure buildup in the huddling chamber will overcome the spring force causing the disk to move away from the nozzle seat, and the valve will pop open.

Once the valve has opened, additional pressure builds up at point "C" (see Figure 8.6c). This is due to the sudden flow increase and the restriction to flow through another annular orifice formed between the inner edge of the disk holder skirt and the outside diameter of the adjusting ring. These additional forces at C cause the disk to lift substantially at pop.

Flow is restricted by the opening between the nozzle and the disk until the disk has been lifted from the nozzle seat approximately one-quarter of the nozzle diameter. After the disk has attained this degree of lift, flow is then controlled by the bore area rather than by the area between the seating surfaces.

The valve closes when the inlet pressure drops sufficiently below the set pressure thus allowing the spring force to overcome the summation of forces A, B, and C. The pressure at which the valve reseats is the closing pressure. The difference between the set pressure and the closing pressure is blowdown. Figure 8.7 shows the disk travel from the set pressure, A, to the maximum relieving pressure, B, during the overpressure incident, to the closing pressure, C, during the blowdown.

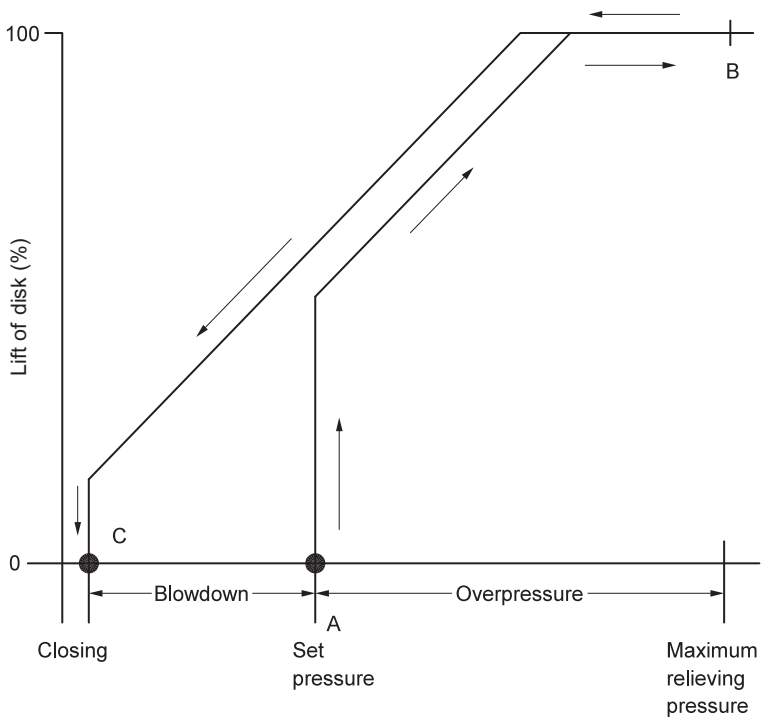

Figure 8.7 Typical relationship between lift of disk in a PRV and vessel pressure. (Courtesy of API Standard 520, Part 1)

8.2.3.1.2 Conventional spring-loaded PRVs designed for liquid service applications

As shown in Figure 8.8, liquid service valves do not "pop" in the same manner as vapor service valves. The reason for this is that the expansive forces produced by vapor are not present in liquid flow. Liquid service valves rely on reactive forces to achieve lift. When the valve is closed, the forces acting on the valve disk are the same as those applied by vapor until a force balance is reached and the net force holding the seat closed approaches zero. From this point on, the force relationship is totally different.

At initial opening, the escaping liquid forms a very thin sheet of fluid, as seen in Figure 8.6b, expanding radially between the seating surfaces. The liquid strikes the reaction surface of the disk holder and is deflected downward, creating a reactive force tending to move the disk and holder upward. These forces typically build very slowly during the first 2-4% of overpressure. As the flow gradually increases, the velocity head of the liquid moving through the nozzle also increases. As shown in Figure 8.6b, these momentum forces, combined with the reactive forces of the radially discharging liquid as it deflected downward from the reaction surface, are substantial enough to cause the value to go into lift. Typically, the valve will suddenly surge to 50-100% lift at 2-6% overpressure. As the overpressure increases, these forces continue to grow, driving the valve into full lift. Liquid service valves, capacity certified in accordance with the ASME Code, are required to reach full-rated capacity at 10% or less overpressure.

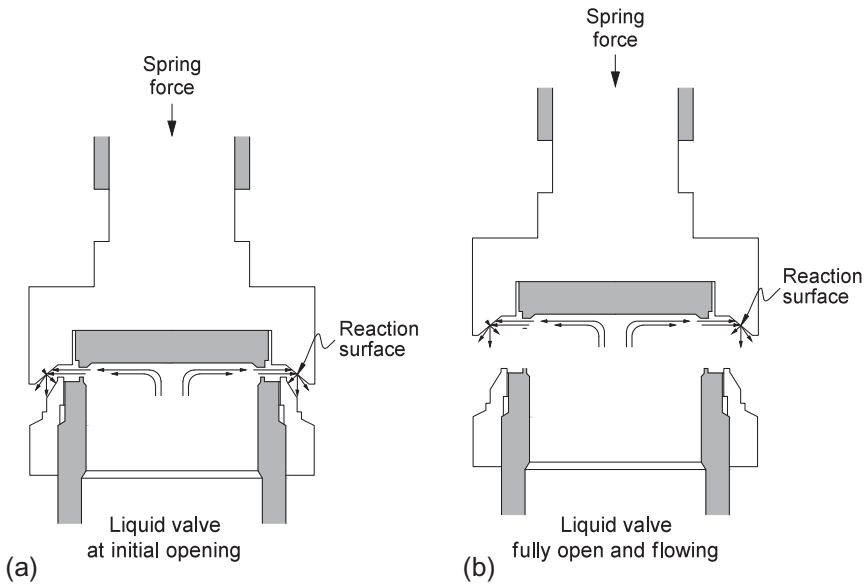

Figure 8.8 PRV operation-liquid service. (Courtesy of API Standard 520, Part 1)

In the closing cycle, as the overpressure decreases, momentum and reactive forces decrease, thus allowing the spring force to move the disk back into contact with the seat. In the past, many PRVs used in liquid service applications were safety relief or relief valves designed for compressible (vapor) service. Many of these valves, when used in liquid service, required high overpressure (25%) to achieve full lift and stable operation, since liquids do not provide the expansive forces that vapors do. In 1985, liquid PRVs were required to operate within the accumulation limit of 10%, and a conservative factor of 0.6 was applied to the valve capacity when sizing valves. Consequently, many installations were oversized and instability often resulted. The criteria used in sizing this type of valve may be found in API Standard 520, Part 1, §5.9.

The rules for sizing PRVs designed for liquid service are given in API Standard 520, Part 1, §5.8. If a capacity on gas service is required, §5.6.2 or §5.6.3 should be used for the preliminary sizing calculation. Capacity certification data for sizing on liquid and gas service should be obtained from the manufacturer for use in final sizing and application of the valve.

Spring-loaded PRVs designed for liquid or liquid and gas applications and that are balanced to minimize the effects of back pressure are recommended for two-phase applications when the fluid being relieved may be liquid, gas, or a multiphase mixture. The manufacturers recommend that valves designed for liquid or liquid and gas service be used if the mass percentage of the two-phase mixture at the valve inlet is 50% vapor or less.

PRVs designed for liquid and gas service should be specified for the fluid to which the valve is normally exposed. For example, if a liquid and gas service valve is located in the vapor region of a vessel containing a liquid level, the valve should be specified for gas service. The valve capacity stamped on the nameplate will be in SCFM of air. If a liquid and gas service valve is located on the waterside of a heat exchanger, then the valve should be specified in liquid service. The valve will have the capacity stamped in gallons per minute of water. In some applications, the valve may be required to relieve a liquid or a gas depending on the condition causing the overpressure, for example, heat exchanger tube rupture. In this application, a valve designed for liquid service or one designed for liquid and gas service is recommended.

8.2.3.1.3 Balanced PRVs

As shown in Figures 8.3 and 8.4, balanced PRVs are spring-loaded PRVs that incorporate a bellows or other means of balancing the valve disk, thus minimizing the effects of back pressure on the performance characteristics of the valve.

When a superimposed back pressure is applied to the outlet of a spring-loaded PRV, a pressure force is applied to the valve disk, which is additive to the spring force. This added force increases the pressure at which an unbalanced PRV will open. If the superimposed back pressure is variable, then the pressure at which the valve will open will vary (see Figure 8.9.)

As shown in Figure 8.10, the balanced-bellows PRV incorporates a bellows that is attached to the disk holder with an effective bellows area, A_B, approximately equal to

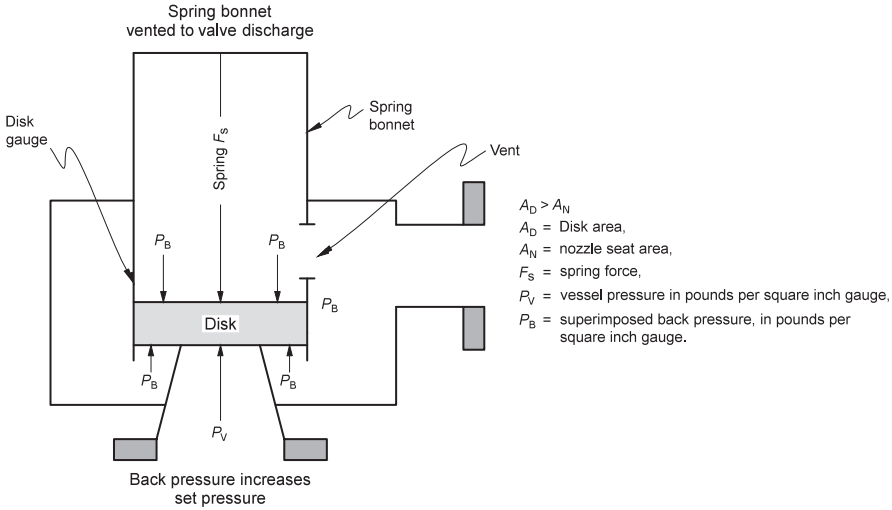

Figure 8.9 Typical effects of superimposed back pressure on the opening pressure of conventional PRVs.
(Courtesy of API Standard 520, Part1)

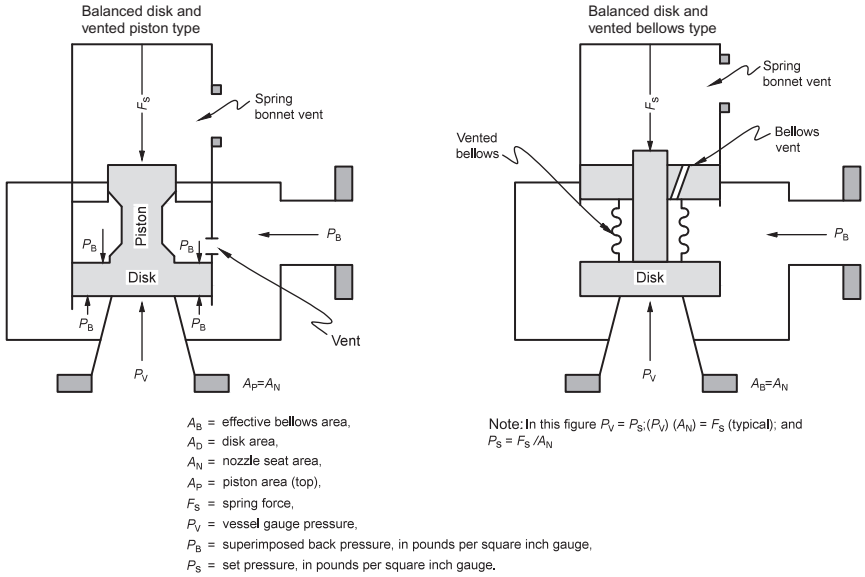

Figure 8.10 Typical effects of back pressure on the set pressure of balanced PRVs.
(Courtesy of API Standard 520, Part 1)

or greater than the seating area of the disk, A_N. This configuration isolates an area on the disk, approximately equal to the seat disk area, from the back pressure. If the bellows area, A_B, were identical to the area of the disk, A_N, the variable back pressure would not affect the PRV opening pressure.

The internal area of the bellows in a balanced-bellows spring-loaded PRV is referenced to atmospheric pressure in the valve bonnet. It is important that the bonnet of a balanced PRV be vented to the atmosphere for the bellows to perform properly. If the valve is located where atmospheric venting would present a hazard or is not permitted by regulations, the vent shall be piped to a safe location that is free of back pressure that may affect the PRV opening pressure. Other means of balancing a spring-loaded PRV, such as a sealed piston, are used by some manufacturers. These designs perform in a manner similar to the balanced-bellows design. When the superimposed back pressure is constant, the spring load can be reduced to compensate for the effect of back pressure on set pressure, and a balanced valve is not required. There are cases where superimposed back pressure is not always constant and such cases should be evaluated carefully.

Balanced PRVs should be considered where the built-up back pressure (back pressure caused by flow through the downstream piping after the PRV lifts) is too high for a conventional PRV (refer to API Standard 520, Part 1, §5.3.3.1). A detailed discussion of back pressure and its effects on PRV performance and flow capacity can be found in API Standard 520, Part 1, §5.3. Balanced PRVs may also be used as a means to isolate the guide, spring, bonnet, and other top work parts within the valve from the relieving fluid. This may be important if there is concern that the fluid will cause corrosive damage to these parts.

It is important to remember that the bonnet of a balanced PRV should be vented to atmosphere at all times. The user should be cautioned of the potential for freezing of atmospheric moisture inside the bonnet in cold service due to autorefrigeration or cold ambient temperatures.

8.2.3.1.4 Pilot-operated PRVs

As shown in Figures 8.11–8.15, a pilot-operated PRV consists of the main valve, which normally encloses a floating piston assembly and external pilot. The piston is designed to have a larger area on the top than on the bottom. Up to the set pressure, the top and bottom areas are exposed to the same inlet operating pressure. Because of the larger area on the top of the piston, the net force holds the piston tightly against the main valve nozzle. As the operating pressure increases, the net seating force increases and tends to make the valve tighter. This feature allows most pilot-operated valves to be used where the maximum expected operating pressure is higher than the percentage shown in Figure 8.16. At the set pressure, the pilot vents the pressure from the top of the piston; the resulting net force is now upward causing the piston to lift, and process flow is established through the main valve. After the overpressure incident, the pilot will close the vent from the top of the piston, thereby reestablishing pressure, and the net force will cause the piston to reseat.

As shown in Figure 8.15, the main valve of the pilot-operated PRV can use a diaphragm in lieu of a piston to provide the unbalanced moving component of the valve.

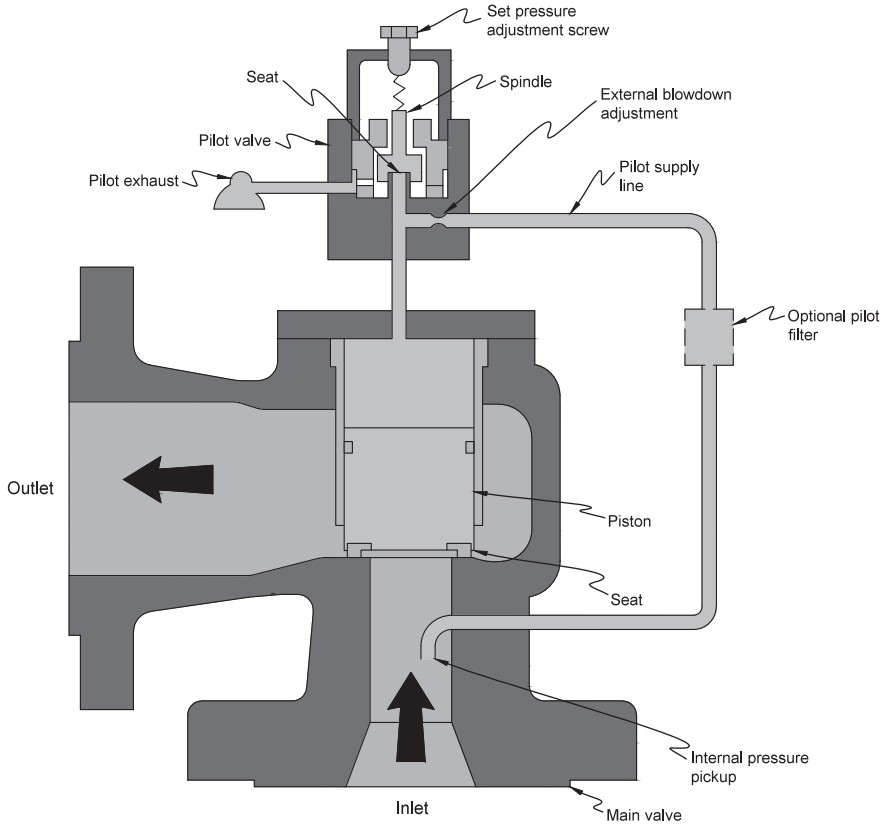

Figure 8.11 Pop-action pilot-operated valve (flowing type).
(Courtesy of API Standard 520, Part 1)

A disk, which normally closes the main valve inlet, is integral with a flexible diaphragm. The external pilot serves the same function to sense process pressure, vent the top of the diaphragm at set pressure, and reload the diaphragm once the process pressure is reduced. As with the piston valve, the seating force increases proportionally with the operating pressure because of the differential exposed area of the diaphragm.

The lift of the main valve piston or diaphragm, unlike a conventional or balanced spring-loaded valve, is not affected by built-up back pressure. This allows for even higher pressures in the relief discharge manifolds. The pilot vent can be directly exhausted either to the atmosphere or to the main valve outlet depending upon the pilot's design and user's requirement. Only a balanced type of pilot, where set pressure is unaffected by back pressure, should be installed with its exhaust connected to a location with varying pressure (such as to the main valve outlet). Slight variations in back pressure may be acceptable for unbalanced pilots (see API Standard 520, Part 1, §5.3.3.1).

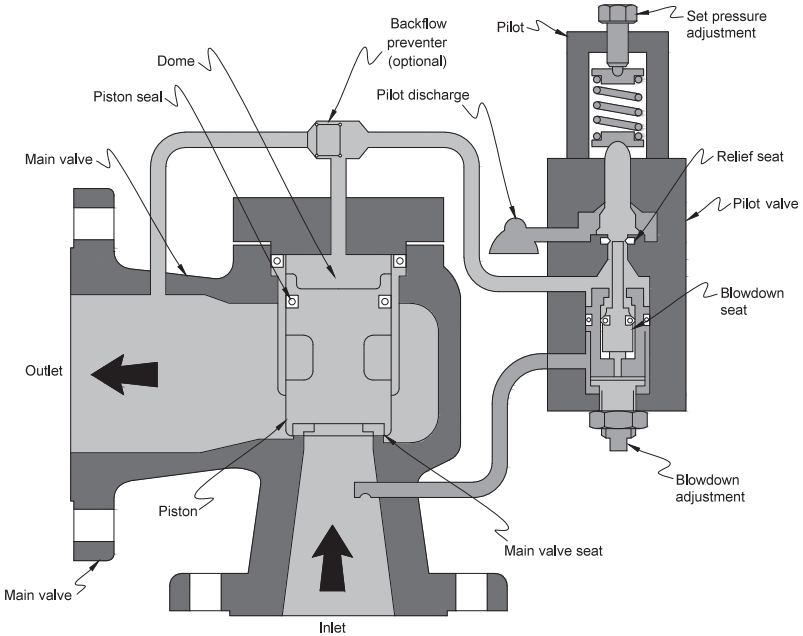

Figure 8.12 Pop-action pilot-operated valve (nonflowing type).
(Courtesy of API Standard 520, Part 1)

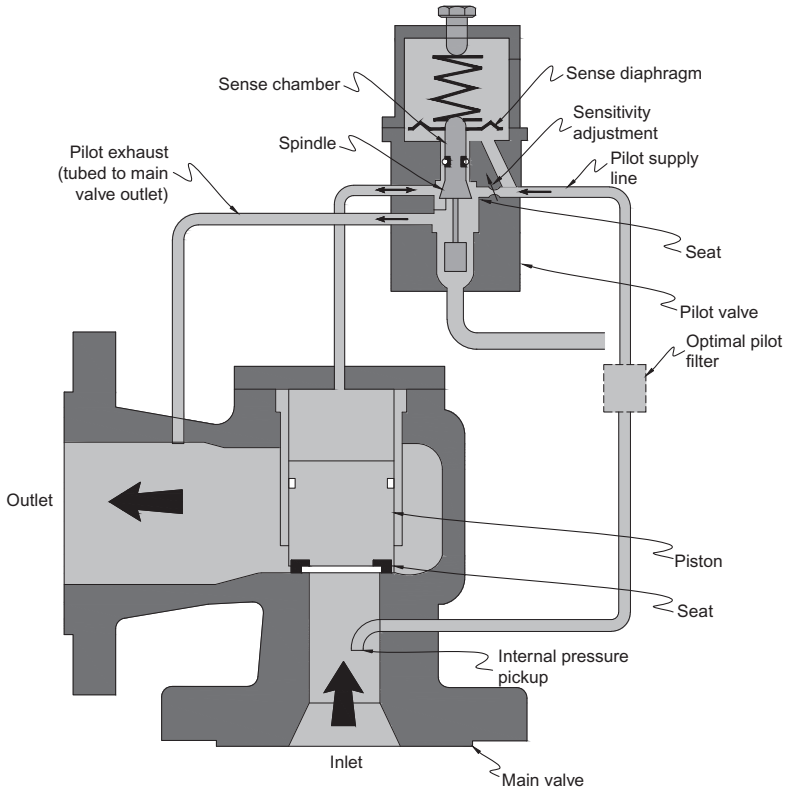

Figure 8.13 Modulating pilot-operated valve (flowing type).
(Courtesy of API Standard 520, Part 1)

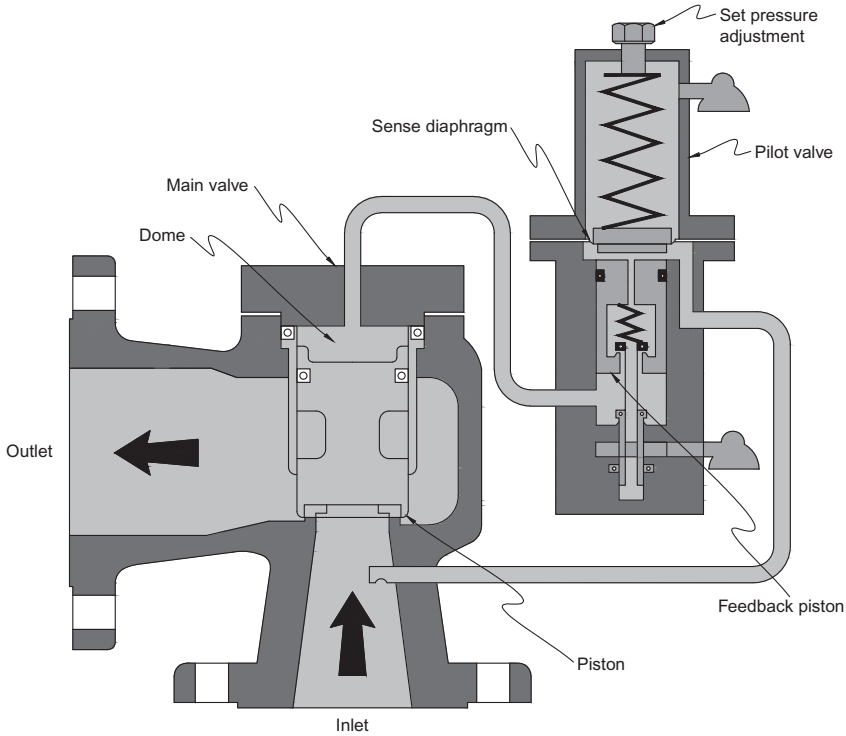

Figure 8.14 Pilot-operated relief valve with a nonflowing modulating pilot valve. (Courtesy of API Standard 520, Part 1)

As shown in Figure 8.12, a backflow preventer is required when the possibility exists of developing a pressure on the discharge side of the valve that exceeds the inlet pressure of the valve. The higher discharge pressure can cause sufficient upward force on the diaphragm or piston to open the valve and cause flow reversal. The backflow preventer allows the discharge pressure to provide a net downward force on the diaphragm or piston to keep the valve closed.

The pilot that operates the main valve can be either a "pop"-action or "modulating"-action pilot. As shown in Figure 8.17, the "pop"-action pilot causes the main valve to lift fully at set pressure without overpressure. This immediate release of pressure provides extremely high opening and closing forces on the main valve seat. This opening action is typically not recommended for liquid services to avoid valve instability.

The modulating pilot, as shown in Figure 8.18, opens the main valve only enough to satisfy the required relieving capacity and can be used in gas, liquid, or two-phase flow applications. A modulating pilot limits the amount of relieving fluid to only the amount required to prevent the pressure from exceeding the allowable accumulation. Since a modulating pilot only releases the required relieving rate, the calculation of

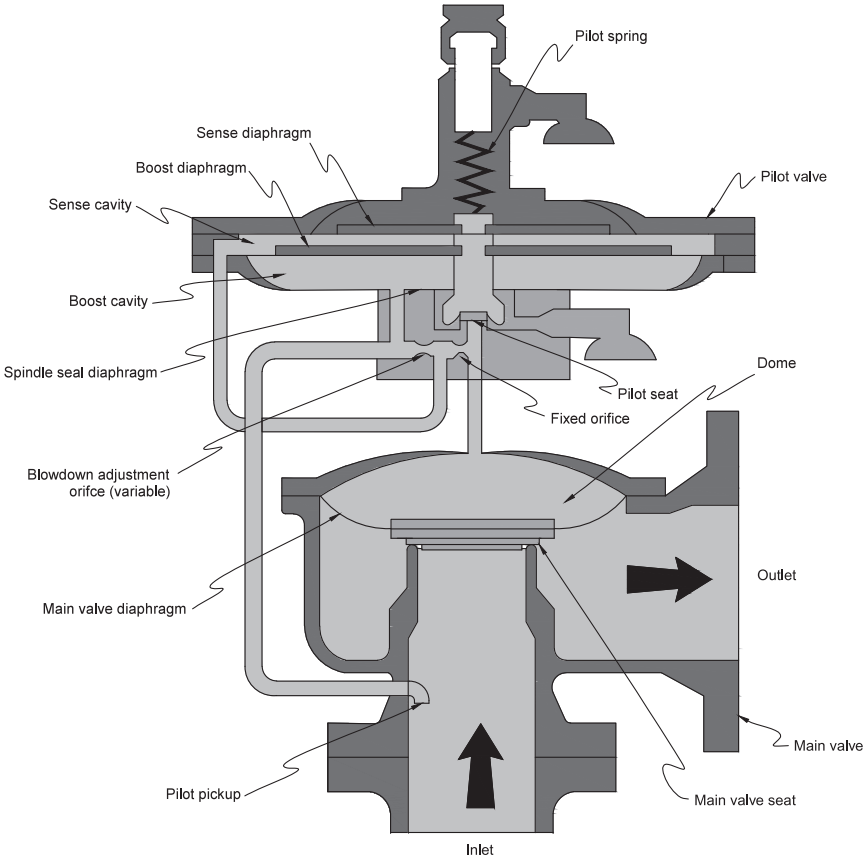

Figure 8.15 Low-pressure pilot-operated valve (diaphragm type). (Courtesy of API Standard 520, Part 1)

built-up back pressure may be based on the required relieving rate instead of the rated relieving capacity of the valve. The modulating pilot valve also can reduce interaction with other pressure control equipment in the system during an upset condition, reduce unwanted atmospheric emissions, and reduce the noise level associated with discharge to the atmosphere.

Pilots may be either a flowing or nonflowing type. The flowing type allows process fluid to continuously flow through the pilot when the main valve is open; the nonflowing type does not. The *nonflowing pilot* type is generally *recommended for most services* to reduce the possibility of hydrate formation (icing) or solids in the lading fluid affecting the pilot's performance.

Pilot-operated PRVs are available for use in liquid and vapor service. Operating characteristics of some pilot-operated PRVs are unaffected by the state of fluid (liquid or gas) and these types are recommended for two-phase flow applications.

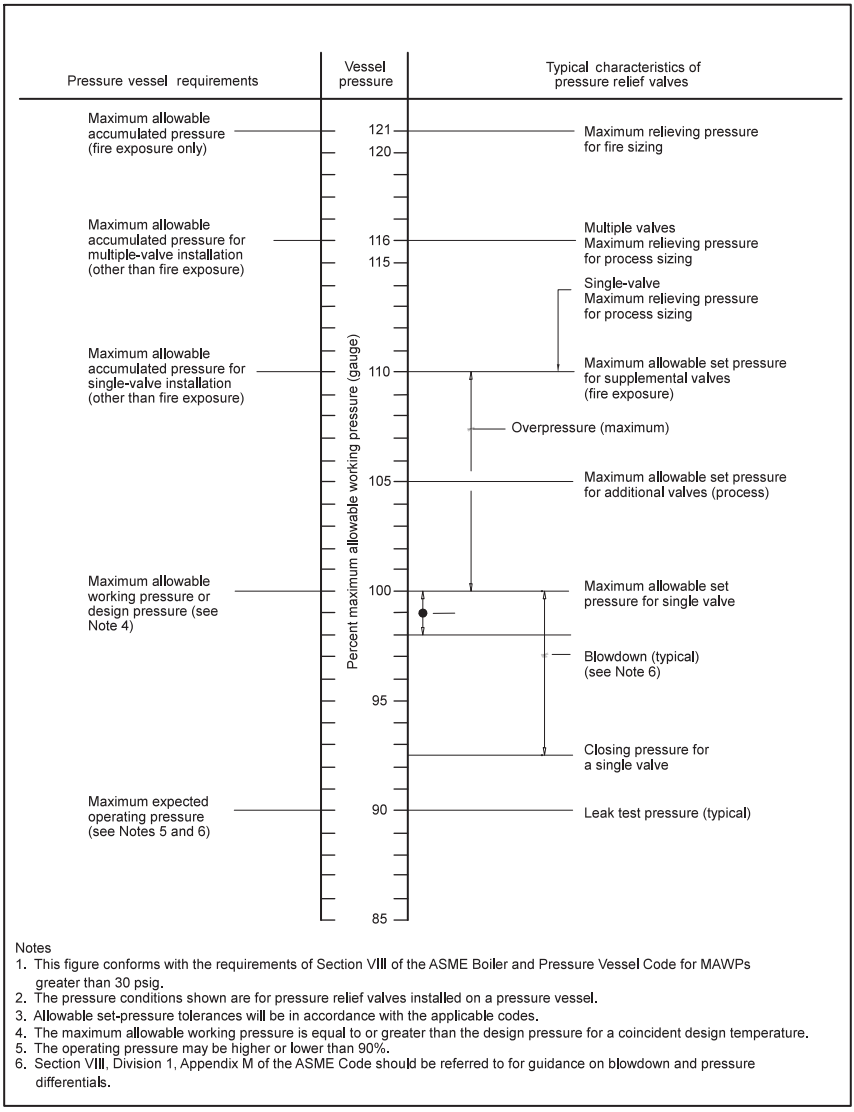

Figure 8.16 Pressure-level relationship for PRVs.
(Courtesy of API Standard 520, Part 1)

Similar to soft-seated spring-loaded valves, most main valves and their pilots contain nonmetallic components and process temperature and fluid compatibility can limit their use. As with all PRVs, the following should be considered:

- Fluid characteristics such as susceptibility to polymerization or fouling
- Viscosity
- Presence of solids
- Corrosiveness

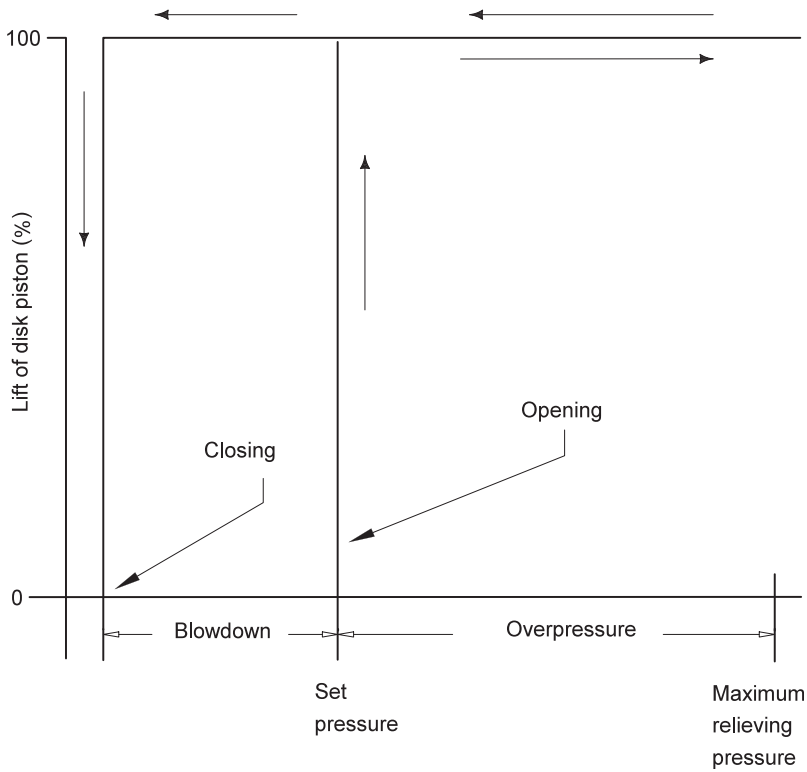

Figure 8.17 Typical relationship between lift of disk or piston and vessel pressure in a pop-action pilot-operated PRV.
(Courtesy of API Standard 520, Part 1)

The manufacturer should be consulted to ensure that the proposed application is compatible with available valves.

8.2.3.2 Rupture disk devices

8.2.3.2.1 General

Rupture disk devices are nonreclosing pressure relief device (PRD) used to protect piping, pressure vessels, and other pressure-containing components from overpressure and/or vacuum. Rupture disks are used in single- and multiple-relief installations.

As shown in Figure 8.19, rupture disks are designed to burst at a known value of differential pressure (positive or negative). They are made of a metallic or graphite foil designed to burst at a given overpressure or depressurization value. They provide an instantaneous response (in the millisecond range) to a pressure increase or decrease, but once the disk has burst, it does not reconstitute itself.

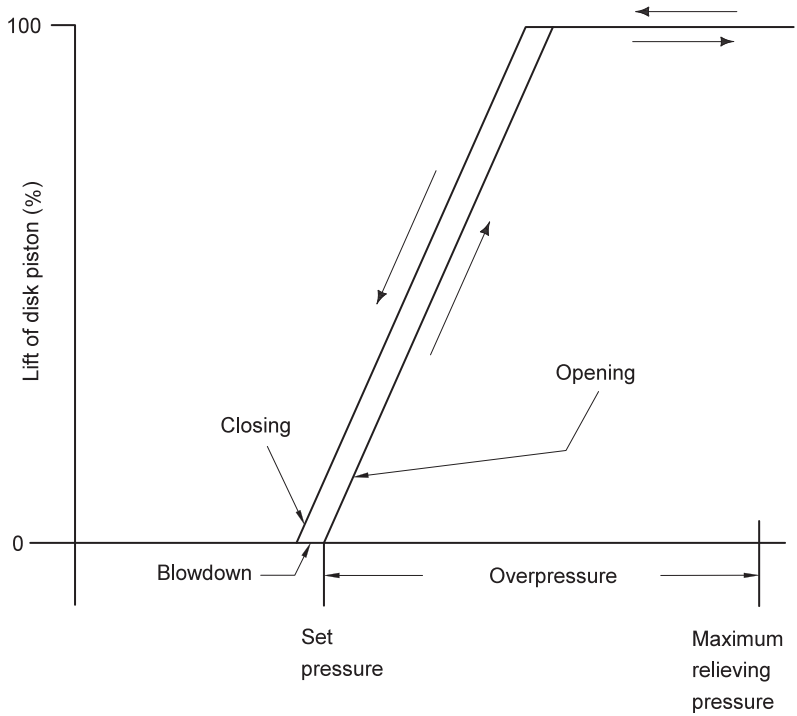

Figure 8.18 Typical relationship between lift of disk or piston and vessel pressure in a modulating-action pilot-operated PRV.
(Courtesy of API Standard 520, Part 1)

8.2.3.2.2 Single, multiple, and fire case applications

Rupture disks can be used in any application requiring overpressure protection where a nonreclosing device is suitable. This includes single, multiple, and fire applications as specified in *ASME Boiler and Pressure Vessel Code, Section VIII, Division 1, Paragraph UG-134*. Figure 8.20 provides the pressure-level relationships between rupture disks and the protected equipment in accordance with ASME Boiler and Pressure Vessel Code.

Rupture disks can be mounted

- upstream of PRVs;
- PRV backup;
- stand-alone, as a unique PRD;
- downstream of PRVs.

As shown in Figure 8.21, rupture disks are generally installed upstream of PRVs, to isolate them from the process. This configuration allows reducing the required

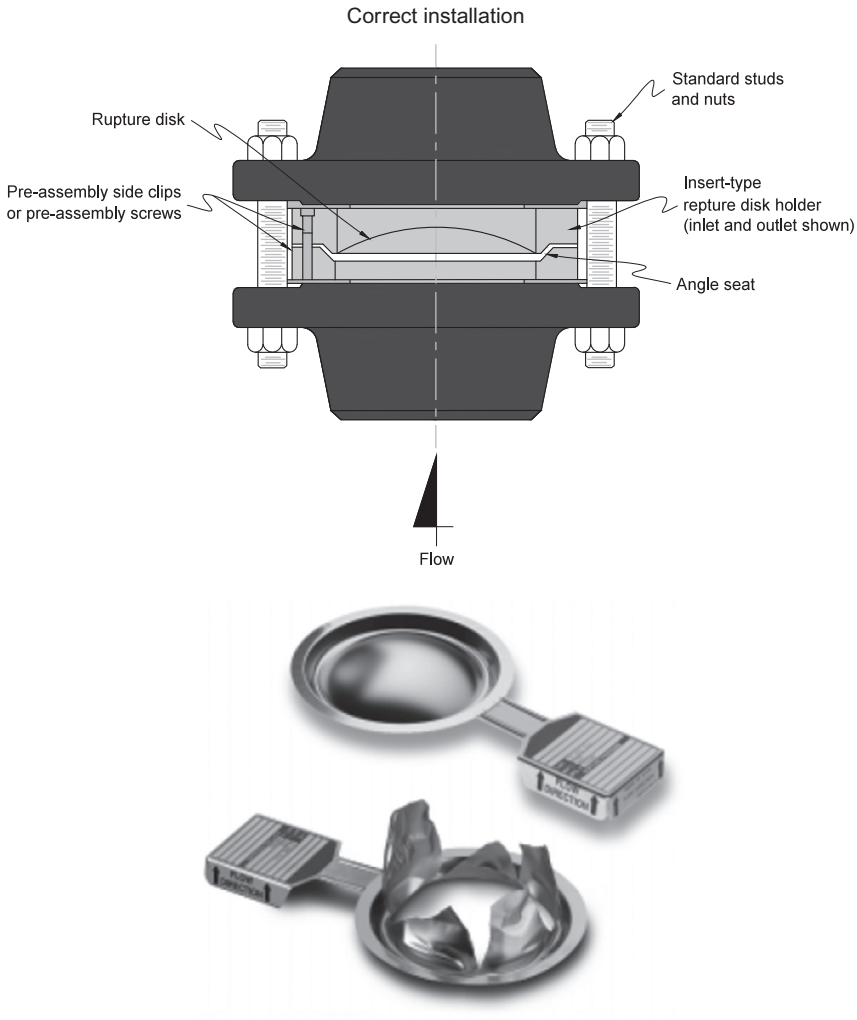

Figure 8.19 Forward-acting solid metal rupture disk.
(Courtesy of API Standard 520, Part 1)

maintenance of PRVs, by isolating the PRV from corrosive products. They can also be installed as a stand-alone device as the sole PRD or as a backup to conventional PRVs; in case the pressure increases and the PRV does not pop-up (or does not manage to release the pressure fast enough), the rupture disk will break. They generally include a rupture disk indicator by pressure measurement, locally or connected to a control room.

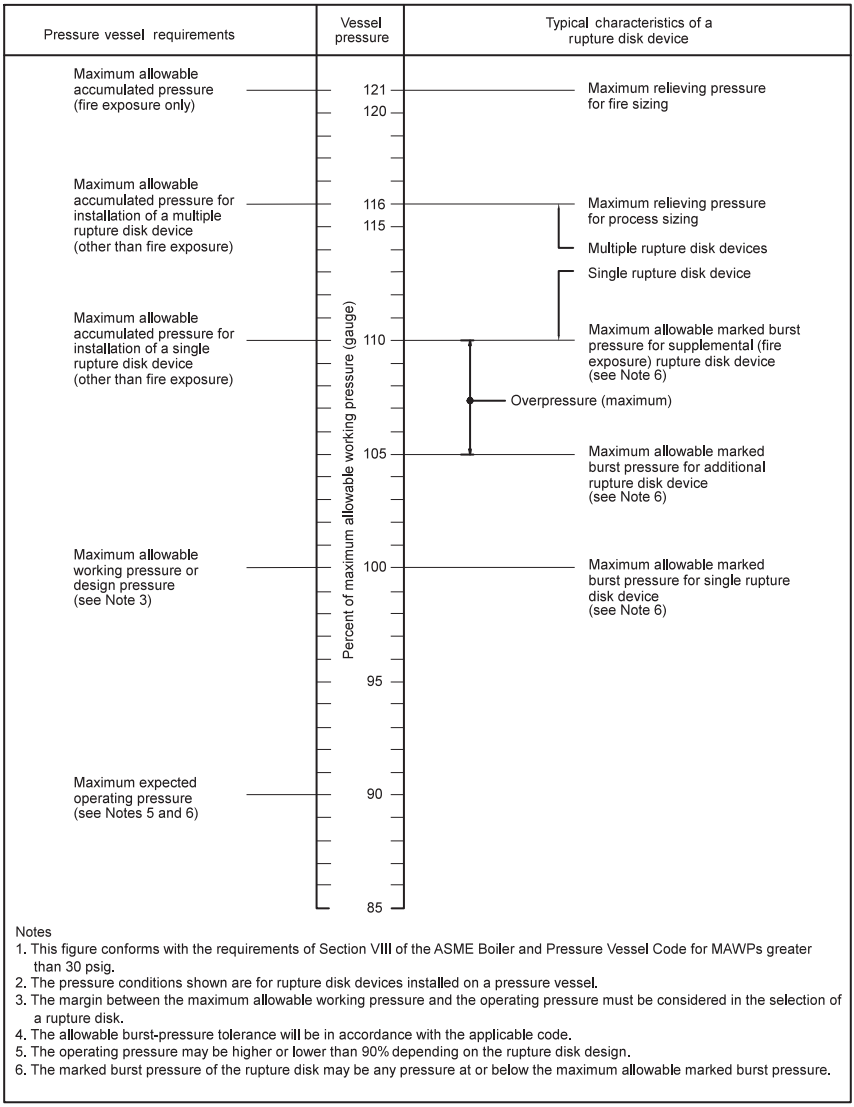

Figure 8.20 Pressure-level relationships for rupture disk devices. (Courtesy of API Standard 520, Part 1)

A rupture disk may be installed on the outlet of a PRV to protect the valve from atmospheric or downstream fluids. Consideration should be given to the valve design so that it will open at its proper setting regardless of any back pressure that may accumulate between the valve and rupture disk (see ASME Boiler and Pressure Vessel Code, Section VIII, Division 1, Paragraph UG-127, for other requirements).

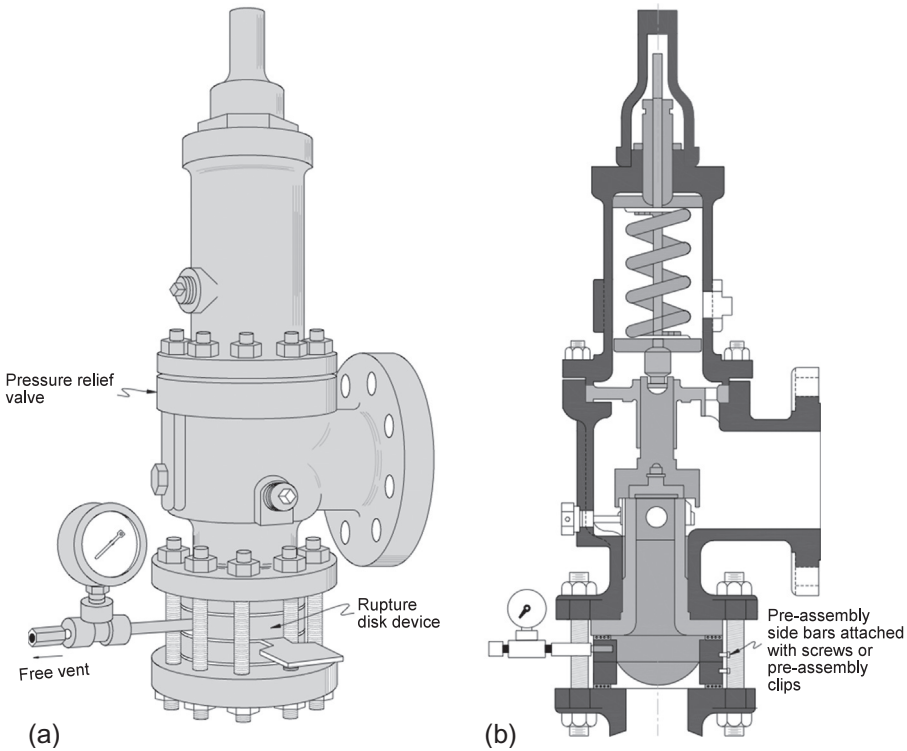

Figure 8.21 Rupture disk device in combination with PRV.
(Courtesy of API Standard 520, Part 1)

8.2.3.2.3 Rupture disk categories

Rupture disks are manufactured in either metallic or graphite designs (see Figure 8.22).

8.2.3.2.3.1 Metallic disks The materials used for conventional disks are as follows:

- Aluminum: This is particularly suitable for low-pressure rupture disks.
- Copper: This is mainly used in small rupture disks for fire extinguishers.
- Gold: This is ideal metal for low-pressure rupture disks in a large number of processes using corrosive chemicals.
- Silver: Like gold, silver is very ductile.
- Palladium: This is suitable for low-pressures restraint to many corrosive agents.
- Monel: This is a nickel-copper alloy and unsuitable for low-pressure ruptures.
- Nickel: This has properties similar to those of Monel.
- Stainless steel: This is resistant to most oxidizing environments.

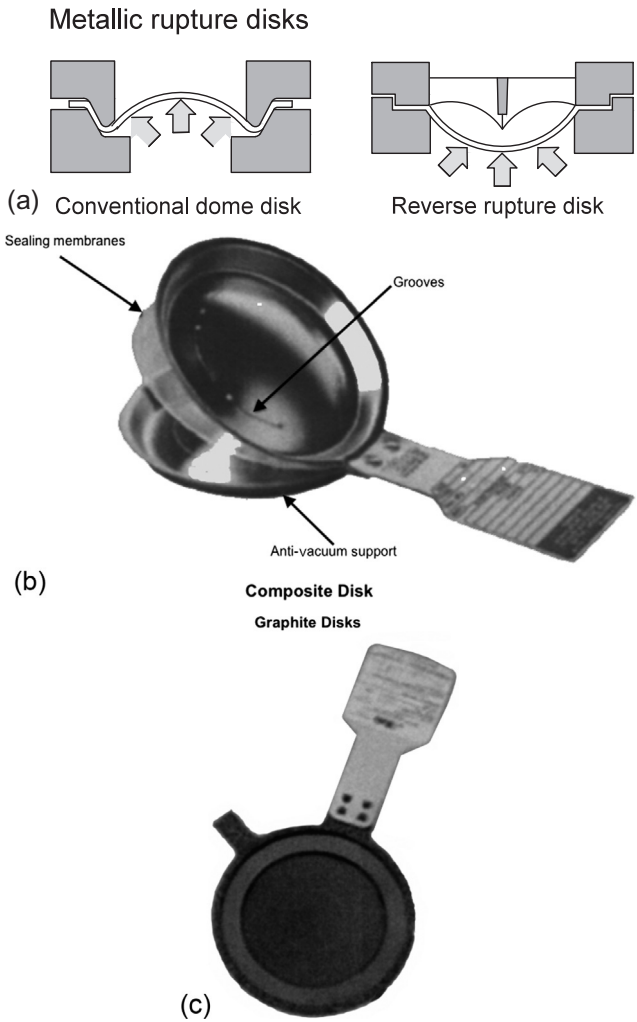

Figure 8.22 Rupture disk categories.

- Fluorinated ethylene propylene-coated disk: FEP is chemically inert. It can be applied to one or both sides of the meal disks, enabling disks made of nonprecious metals to be used in severe corrosion environments with the following three major technological designs:
- Conventional dome disk: The dome is in the direction of the rupture pressure action and breaks under a pressure-induced load.
- Reverse disk: The dome faces the direction of the rupture pressure and breaks under a force bending, deforming or shearing it.
- Bursting disk with precut scores: This is made of two or several layers, one of them being slit or grooved so as to control the rupture pressure as finely as possible.

8.2.3.2.3.2 Graphite disks Safety graphite disks are made of a graphite disk including a rupture film minutely calibrated so as to obtain the almost immediate freeing of the active surface by shearing under the action of pressure. Their bursting set pressure rating is much more accurate than metal disks, but they have a drawback—when they burst, they pulverize into small particles all along the downstream piping.

8.2.3.2.4 Types of rupture disks

There are three major rupture disk types:

- Forward-acting, tension loading
- Reverse-acting, compression loading
- Graphite, shear loading

8.2.3.2.4.1 Forward-acting solid metal rupture disks As shown in Figure 8.19, a forward-acting rupture disk is a domed, solid metal disk designed to burst at a rated pressure applied to the concave side. This rupture disk typically has an angular seat design and provides a satisfactory service life when operating pressures are up to 70% of the marked burst pressure of the disk (70% operating ratio). One must consult the manufacturer for the actual recommended operating ratio for the specific disk under consideration. These disks have a random opening pattern that produces fragments and are not suitable for installation upstream of a PRV.

8.2.3.2.4.2 Forward-acting scored rupture disks As shown in Figure 8.23, the scored forward-acting rupture disk is a domed disk designed to burst along scored lines at a rated pressure applied to the concave side. Some designs provide satisfactory service life when operating pressures are up to 85-90% of the marked burst pressure of the disk (85-90% operating ratio). One must consult the manufacturer for the actual recommended operating ratio for the specific disk under consideration. Since the score lines control the opening pattern, this type of disk can be manufactured to be nonfragmenting and is acceptable for installation upstream of a PRV. This design is manufactured from thicker material than nonscored designs with the same burst pressure and provides additional resistance to mechanical damage.

8.2.3.2.4.3 Forward-acting composite rupture disks The forward-acting composite rupture disk is available in flat seat or domed multipiece construction disk (see Figure 8.24). This configuration is designed to burst at a rated pressure applied to the concave side. The flat composite rupture disk may be designed to burst at a rated pressure in either or both directions. Some designs are nonfragmenting and are acceptable for use upstream of a PRV.

The burst pressure is controlled by the combination of slits and tabs in the top section and a metallic or nonmetallic seal number under the top section. Composite rupture disks are generally available in burst pressures lower than those of forward-acting, nonscored rupture disks. Composite materials may offer a longer service life as a result of the corrosion-resistant properties of the seal material selected.

If vacuum or back-pressure conditions are present, composite disks can be furnished with a support to prevent reverse flexing (see Figure 8.24). A domed,

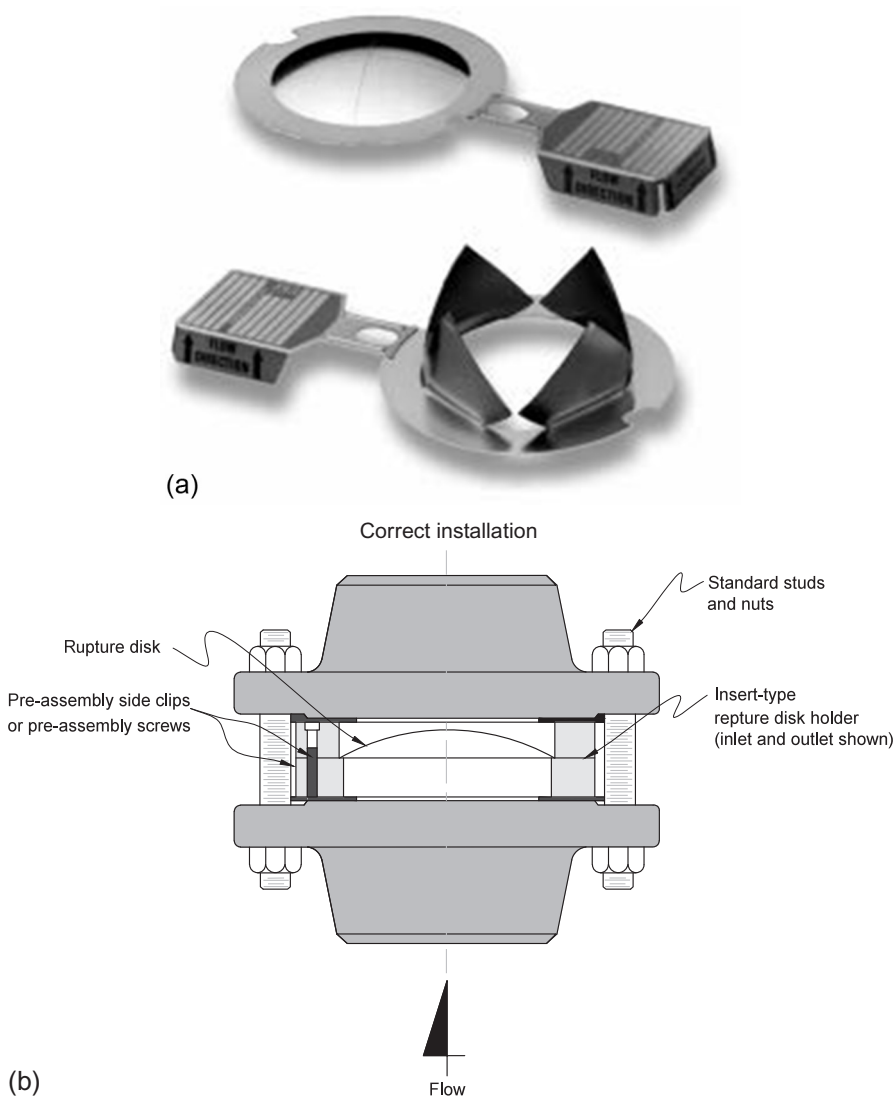

Figure 8.23 Forward-acting scored rupture disk. (Courtesy of API Standard 520, Part 1)

composite rupture disk generally provides satisfactory service life when the operating pressure is 80% or less of the marked burst pressure (80% operating ratio).

8.2.3.2.4.4 Reverse-acting rupture disks As shown in Figures 8.25 and 8.26, a reverse-acting rupture disk typically is a domed solid metal disk designed to reverse and burst at a rated pressure applied on the convex side. Reverse-acting rupture disks

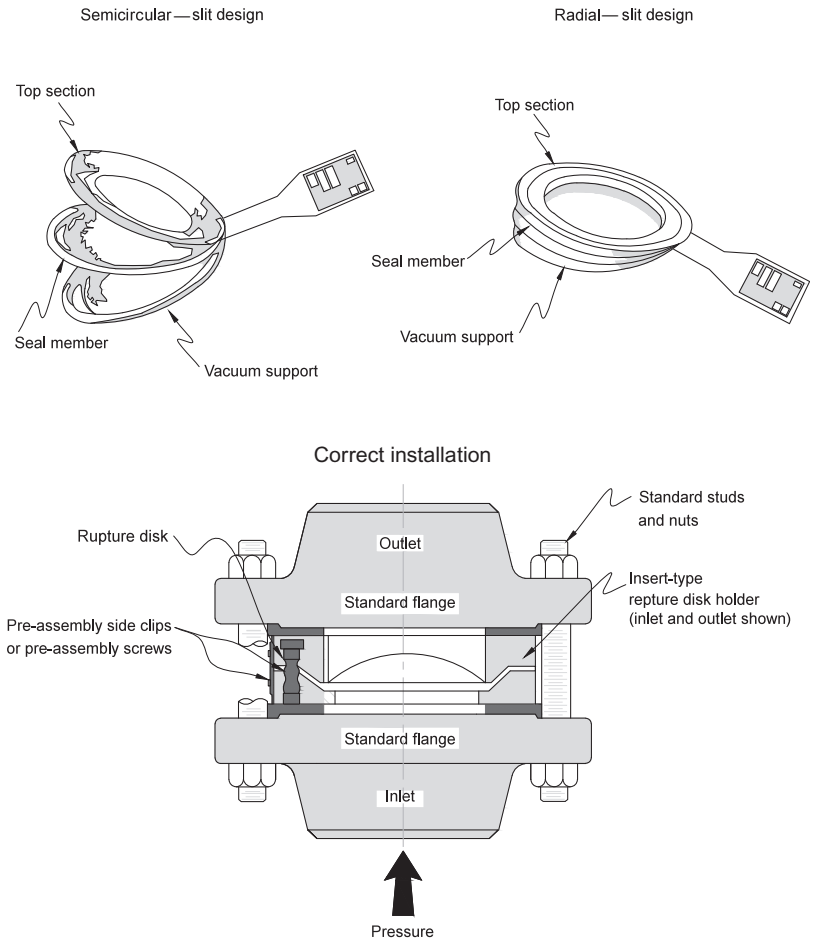

Figure 8.24 Forward-acting composite rupture disk.
(Courtesy of API Standard 520, Part 1)

are designed to open by such methods such as shear blades, tooth blades, tooth rings, or scored lines.

Reverse-acting rupture disks may be manufactured as nonfragmenting and are suitable for installation upstream of PRVs. These disks provide satisfactory service life when operating pressures are 90% or less of marked burst pressure (90% operating ratio). Some disks are designed to be exposed to pressures up to 95% of the marked pressure. Since they are made of thicker disk materials, the effects of corrosion and vacuum are reduced. These disks usually exhibit longer service life under pressure/vacuum cycling conditions and pressure fluctuations.

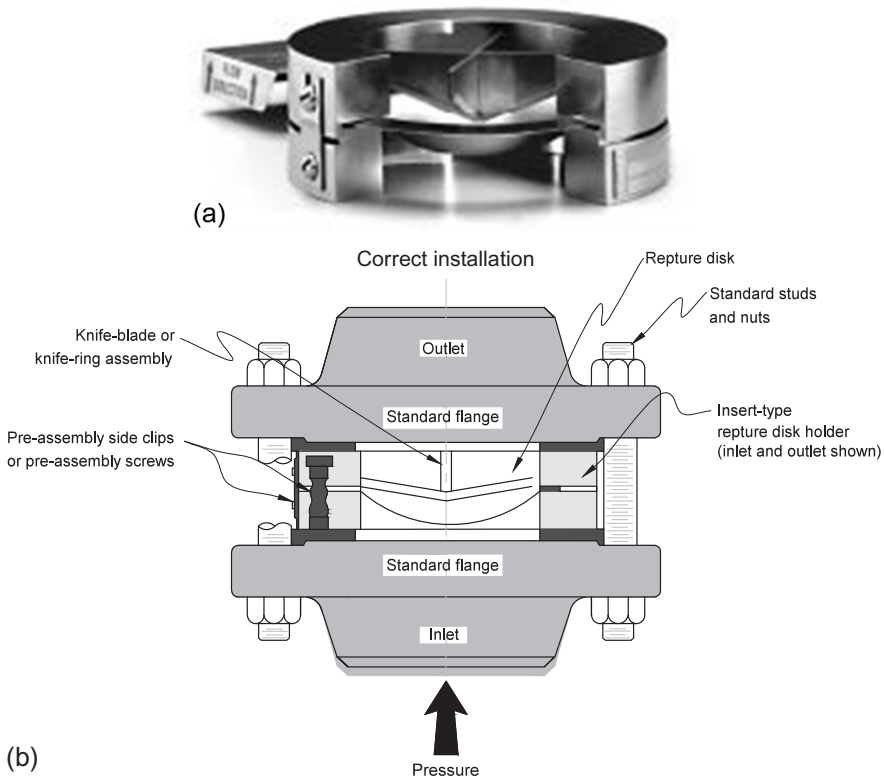

Figure 8.25 Reverse-acting rupture disk with knife blades.
(Courtesy of API Standard 520, Part 1)

8.2.3.2.4.5 Graphite rupture disks As shown in Figure 8.27, graphite rupture disks are typically machined from a bar of fine graphite that has been impregnated with a sealing compound to seal the porosity of the graphite matrix. The graphite rupture disk operates on a pressure differential across the center diaphragm of the disk. Graphite rupture disks provide a satisfactory service life when operating pressures are up to 80% of the marked burst pressure (80% operating ratio) and can be used in both liquid and vapor services.

8.2.3.2.5 Rupture disk selection and specification

Rupture disk selection is based on the operating parameters of the system in which it is installed. These parameters should be specified by the purchaser when purchasing rupture disks. These parameters include, but are not limited to, the following:

- MAWP of vessel or piping
- Fluid state (vapor, liquid, or multiphase)
- Range of operating pressures and temperatures

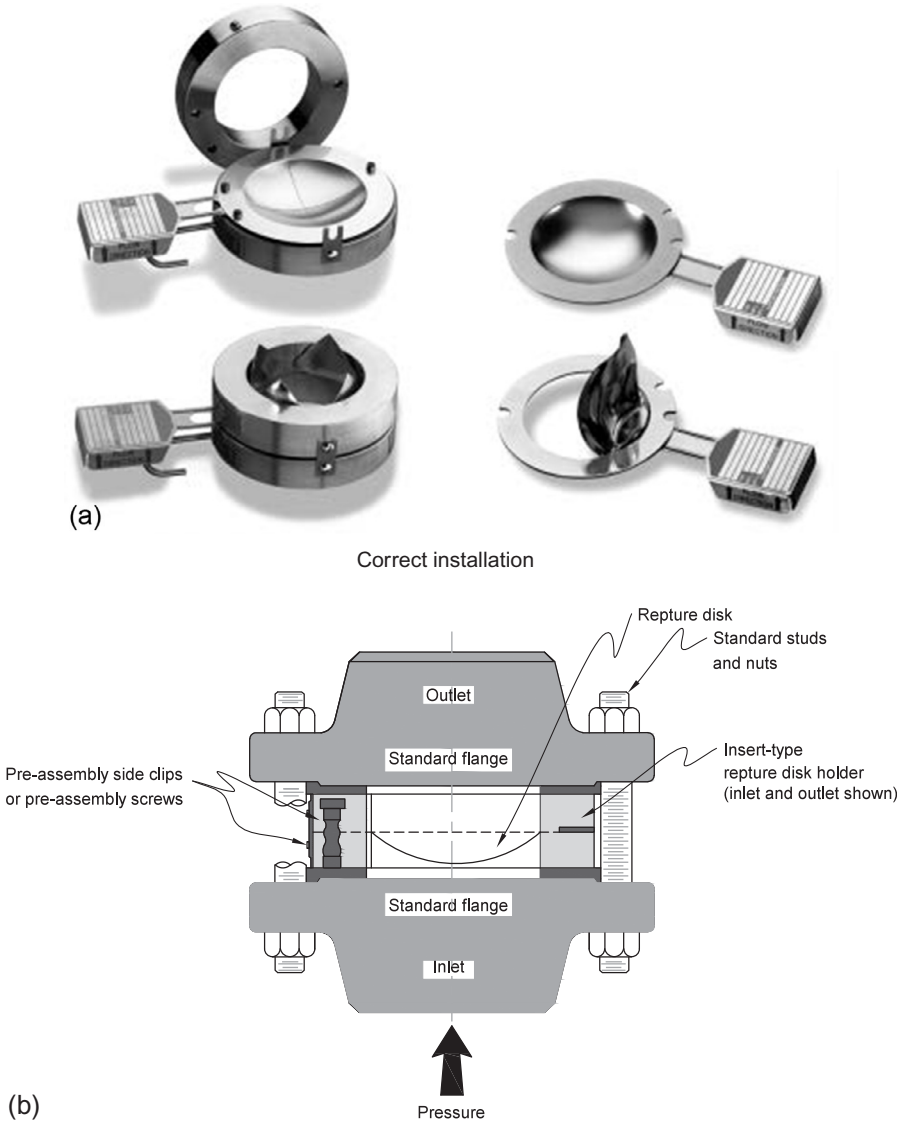

Figure 8.26 Reverse-acting scored rupture disk.
(Courtesy of API Standard 520, Part 1)

- Cyclic or pulsating service
- Required relieving capacity or maximum resistance coefficient
- Corrosiveness of upstream and downstream environment
- Vacuum or back-pressure conditions
- Location upstream or downstream of a PRV
- Single or multiple devices

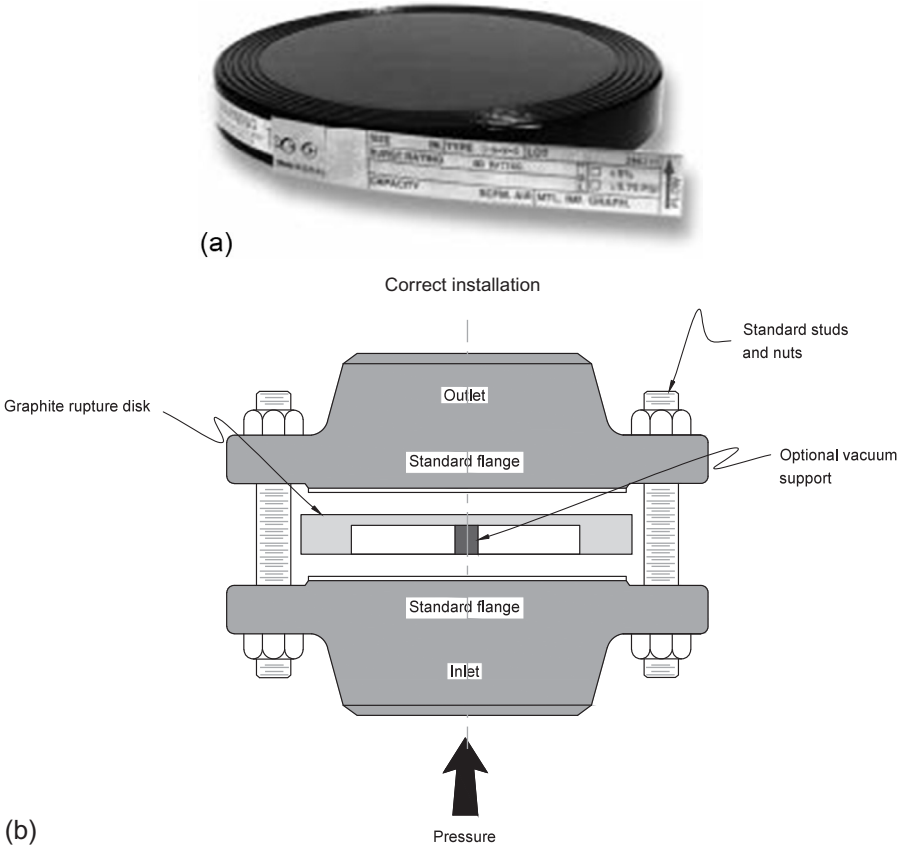

Figure 8.27 Graphite rupture disk.
(Courtesy of API Standard 520, Part 1)

The following rupture disk parameters are selected or determined based on the above system operating parameters:

- Burst pressure and temperature (see Figure 8.28)
- Operating ratio, manufacturing design range, and burst tolerance (see Figure 8.29)
- Disk type, material, and construction
- Disk and holder size (based on required flow per API Standard 520, Part 1, Paragraph 5.11)

The relationship between system pressures and the operating characteristics of a rupture disk is shown in Figure 8.28. Since the marked burst pressure of a rupture disk can be anywhere within its manufacturing design range, the user is cautioned to make sure that the upper limit of the manufacturing design range does not exceed the MAWP of the equipment being protected.

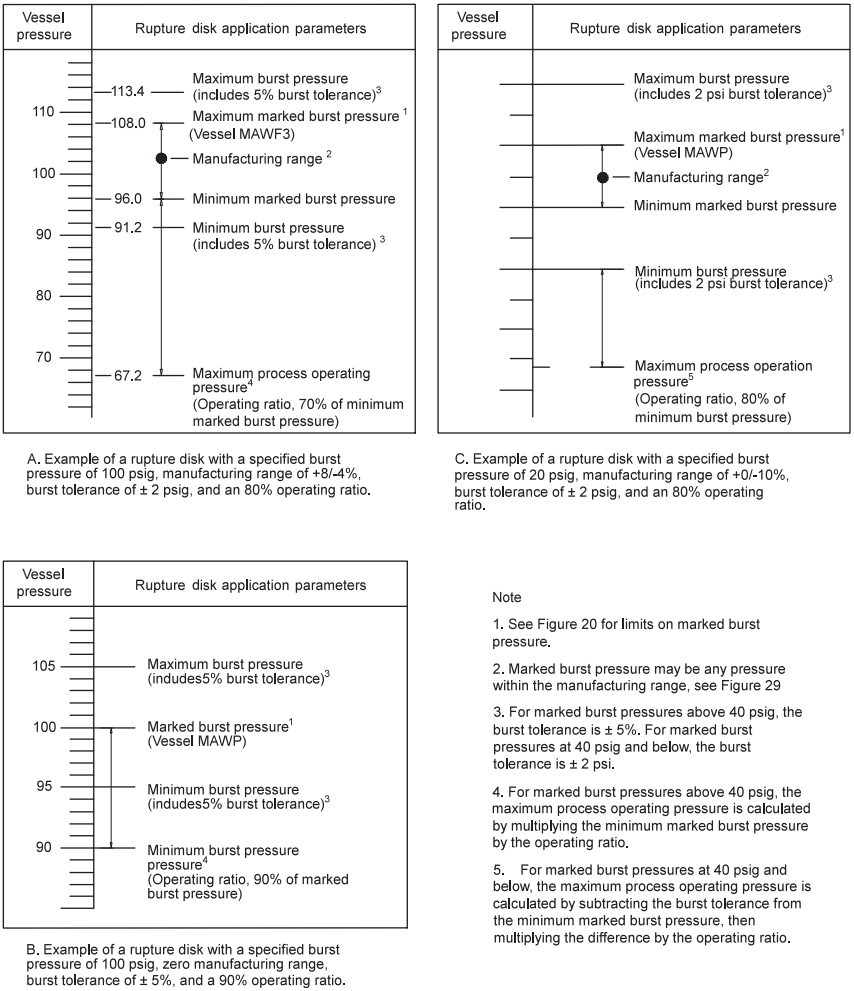

Figure 8.28 Rupture disk application parameters assuming no superimposed back pressure. (Courtesy of API Standard 520, Part 1)

8.2.3.3 Pin-actuated devices

Pin-actuated, commonly called "rupture-pin," relief devices are nonreclosing devices consisting of a moving disk exposed to the pressure system and an external mechanism housing a pin that is mechanically linked to the disk. Pins may be loaded in tension (breaking pins) or in compression (buckling pins; see Figure 8.30). The pin restrains the movement of the disk unit and the specified set pressure is reached. At this point, the pin fails and the disk opens.

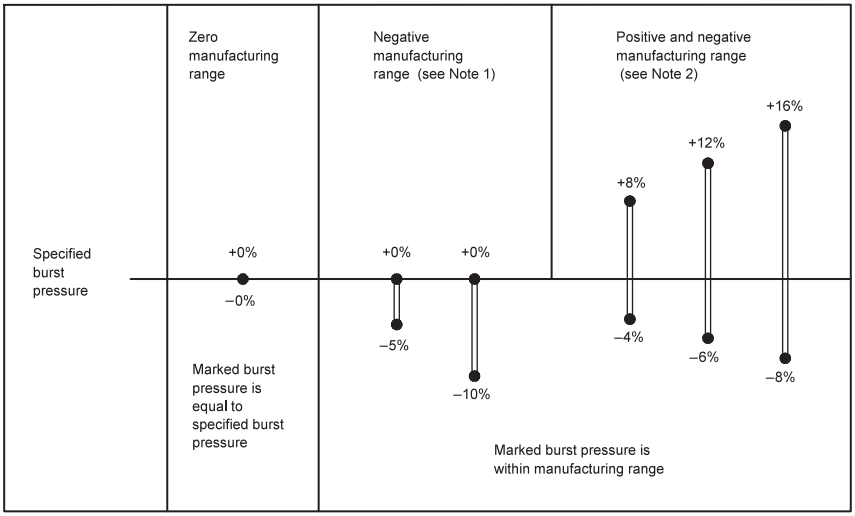

Note
1. The marked burst pressure will not exceed the specified burst pressure.
2. Positive manufacturing range may result in a marked burst pressure exceeding the specified burst pressure.

Figure 8.29 Common types of manufacturing ranges and corresponding burst pressure marking.
(Courtesy of API Standard 520, Part 1)

8.3 Procedures for sizing

8.3.1 Determination of relief requirements

To establish the size and design of a PRD for any application, the designer should first determine the conditions for which overpressure protection may be required. Care should be exercised in establishing the various contingencies that could result in overpressure. The contingencies that can cause overpressure should be evaluated in terms of the pressure generated and the rates at which fluids are required to be relieved. The process flow diagram, material balance, piping and instrument diagrams, equipment specification sheets, and design basis for the facility are needed to calculate the individual relieving rates for each PRD.

API Standard 521 lists a number of common operational conditions for which overpressure protection may be required. API Standard 521 provides a detailed discussion of relief requirements for these emergency operating conditions. The most common causes of overpressure in upstream oil and gas operations are blocked discharge, gas blowby, and fire. API provides a detailed discussion on the relief requirements for the special case of fire.

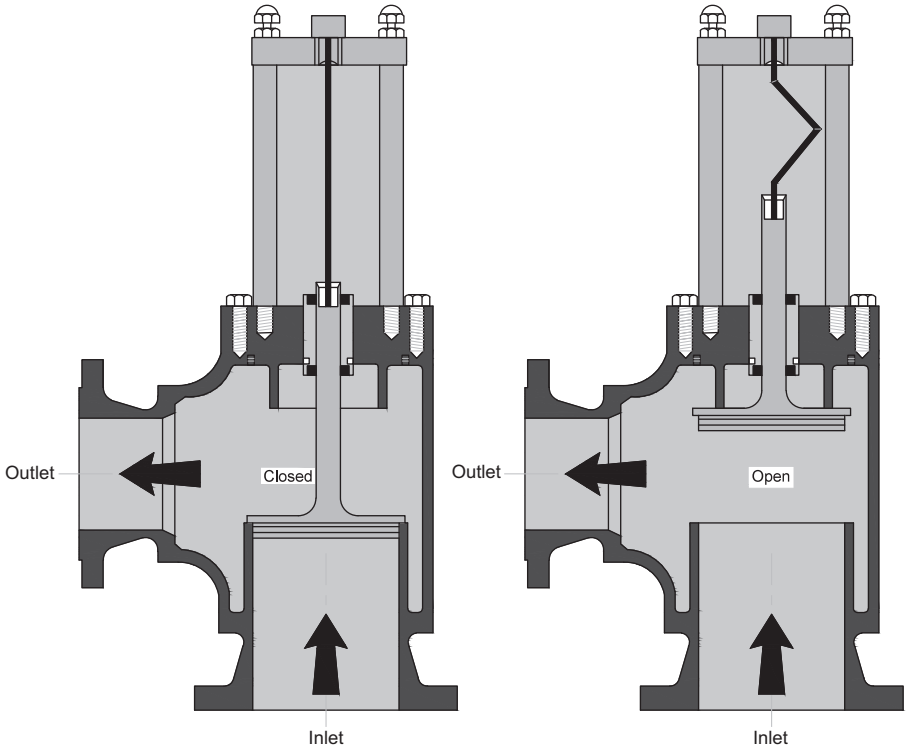

Figure 8.30 Buckling pin valve.
(Courtesy of API Standard 520, Part 1)

8.3.2 API effective area and effective coefficient of discharge

PRVs may be initially sized using the equations presented in Sections 8.5–8.10 as appropriate for vapors, gases, liquids, or two-phase fluids. These equations use effective coefficients of discharge and effective areas, which are independent of any specific valve design. The designer can use API 526 to select a PRV. API Standard 520, Part 1, lists valve configurations specified by inlet/outlet size and flange configuration, materials of construction, pressure/temperature limits, inlet and outlet centers to face dimensions, and effective orifice designation. When a valve is specified per this standard, the orifice size is expressed in terms of a letter designation ranging from the smallest, "*D*," to the largest, "*T*."

The rated coefficient of discharge for a PRV, as determined per the applicable certification standards, is generally less than the effective coefficient of discharge used in API Standard 520 (particularly for vapor service valves where the effective coefficient of discharge is 0.975). This is true of valves certified per the rules of the ASME Code, where the average coefficient from a series of valve test results is multiplied by 0.9 to establish a rated coefficient of discharge. For this reason, the actual discharge or

orifice area for most valve designs is greater than the effective discharge area specified for that valve size per API 526. This allows the rated capacity of most valve designs to meet or exceed the estimated capacity for preliminary sizing determined per API Standard 520 calculations.

In summary, the effective orifice size and effective coefficient of discharge specified in API standards are assumed valves used for the initial selection of a PRV size from configuration specified in API 526, independent of an individual valve manufacturer's design. In most cases, the actual area and the rated coefficient of discharge for an API letter orifice valve are designed so that the actual certified meets or exceeds the capacity calculated using the methods presented in API Standard 520. There are, however, a number of valve designs where this is not so. When the PRV is selected, therefore, the actual area and rated coefficient of discharge for that valve shall be used to verify the rated capacity of the selected valve and to verify that the valve has sufficient capacity to satisfy the application.

8.3.3 Back pressure

8.3.3.1 General

Pressure existing at the outlet of a PRV is defined as back pressure. The back pressure at the outlet of every relief device should be such that the device can handle its design capacity with the calculated back pressure under the design relief conditions. Regardless of whether the valve is vented directly to atmosphere or the discharge is piped to a collection system, the back pressure may affect the operation of the PRV. Effects due to back pressure may include variations in operating pressure, reduction in flow capacity, instability, or a combination of all three.

8.3.3.2 Superimposed back pressure

Back pressure that is present at the outlet of a PRV when it is required to operate is defined as superimposed back pressure. This back pressure can be constant if the valve outlet is connected to a process vessel or system that is held at a constant pressure. In most cases, the superimposed back pressure will be variable as a result of charging conditions existing in the discharge system.

8.3.3.3 Built-up back pressure

Back pressure that develops in the discharge system after the PRV opens is defined as built-up back pressure. Built-up back pressure occurs due to pressure drop in the discharge system as a result of flow from the PRV. Short tailpipes that vent directly to the atmosphere typically result in lower built-up back pressure than long discharge systems. However, chocked flow can occur at the outlet of even a short tailpipe, venting directly to the atmosphere, resulting in high built-up back pressure. Therefore, the magnitude of the built-up back pressure should be evaluated for all systems, regardless of the outlet piping configuration.

The magnitude of the back pressure that exists at the outlet of a PRV, after it has opened, is the total of the superimposed and the built-up back pressure. The back

pressure at the outlet of every relief device should be such that the device can handle its design capacity with the calculated back pressure under the design relief conditions.

8.3.3.4 Effects of superimposed back pressure on PRV opening

Superimposed back pressure at the outlet of a conventional spring-loaded PRV acts to hold the valve disk closed with a force additive to the spring force. The actual spring setting can be reduced by an amount equal to the superimposed back pressure to compensate for this.

Balanced PRVs utilize a bellows or piston to minimize or eliminate the effect of superimposed back pressure on set pressure. Many pilot-operated PRVs have pilots that are vented to atmosphere or are balanced to maintain set pressure in the presence of variable superimposed back pressure. Balanced spring-loaded or pilot-operated PRVs should be considered if the superimposed back pressure is variable. However, if the amount of variable superimposed back pressure is small, a conventional valve should be used provided the following:

- The bench set pressure (CDTP) has been appropriately compensated for superimposed back pressure.
- The maximum pressure during relief does not exceed the code allowable limits for accumulation in the equipment being protected.

Conventional PRVs are often used when the outlet is piped into a relief header without compensating the set pressure for the superimposed back pressure caused by other relieving devices. This approach can be used provided the allowance accumulation is not exceeded during the release.

8.3.3.5 Effects of back pressure on PRV operation and flow capacity

8.3.3.5.1 Conventional PRVs

Conventional PRVs require the relief header back pressure (superimposed plus built-up) to be less than 10% of the set pressure at 10% allowable overpressure of the lowest-set relief valve tied into the header. When the superimposed back pressure is constant, the spring load may be reduced to compensate for the superimposed back pressure. When the downstream piping is designed within the above back-pressure criteria, no back-pressure capacity correction ($K_b = 1.0$) is required in the valve sizing equations, for gases at critical flow or for liquids. When the back pressure is expected to exceed these specified limits, a balanced or pilot-operated PRV should be used.

8.3.3.5.2 Balanced PRVs

A balanced PRV should be used where the built-up back pressure is too high for conventional PRVs or where the superimposed back pressure varies widely compared to the set pressure. Balanced PRVs can be used where the total superimposed back pressure (superimposed plus built-up) does not exceed 50% of the set pressure. The

manufacturer should be consulted concerning the limitation of a particular valve design. The manufacturers provide capacity correction factors (back-pressure correction factors) to account for reduction in flow. Typical back-pressure correction factors are shown in Figures 8.31 and 8.32 and are suitable for preliminary sizing procedures. These correction factors are only applicable to balanced spring-loaded PRVs with back pressures up to 50% of the set pressure. Final sizing calculations should always be completed using the manufacturer's actual charts.

In most applications, the allowable overpressure is 10% and the back-pressure correction factor for 10% overpressure should be used. In the case of multiple-valve installations, the low set valve may operate at overpressures of up to 16%. A back-pressure correction factor for 16% overpressure may be used for that low set valve. The high set valve is actually operating at a maximum overpressure of 10% (assuming the high set valve is set at 105% of the MAWP), however, and the back-pressure correction factor of 10% overpressure should be used for the high set valve. A supplemental valve used for the fire design condition may be set to open at 10% above MAWP. In this case, the back-pressure correction factor for 10% overpressure

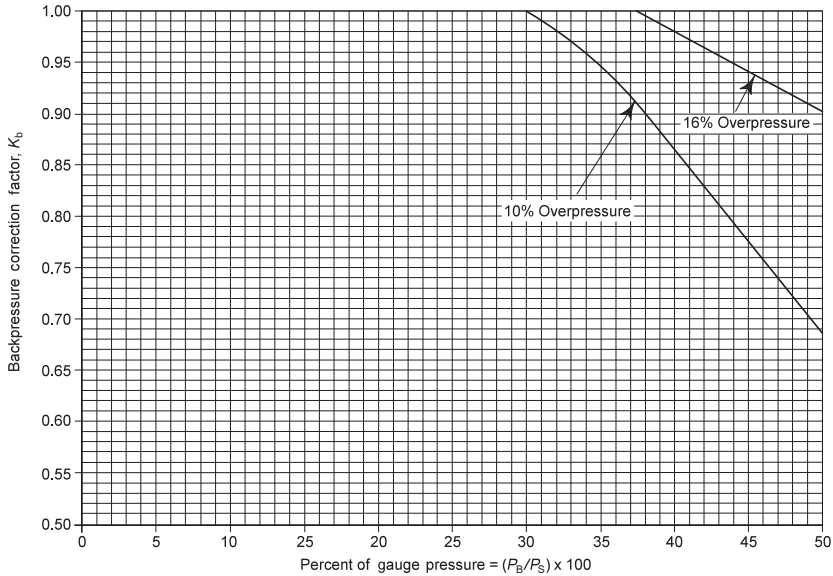

P_B = back pressure, in psig.
P_S = set pressure, in psig.

Notes

1. The curves above represent a compromise of the values recommended by a number of relief valve manufacturer and may be used when the make of the valve or the critical flow pressure point for the vapor or gas is unknown. When the make of the valve is known, the manufacturer should be consulted for the correction factor. These curves are for set pressures of 50 psig and above. They are limited to back pressure below critical flow pressure for a given set pressure. For set pressures below 50 psig or for subcritical flow, the manufacturer must be consulted for values of K_b.
2. For 21% overpressure, K_b equals 1.0 up to P_B/P_S = 50%.

Figure 8.31 Back pressure correction factor, K_b, for balanced-bellows PRV (vapors and gases). (Courtesy of API Standard 520, Part 1)

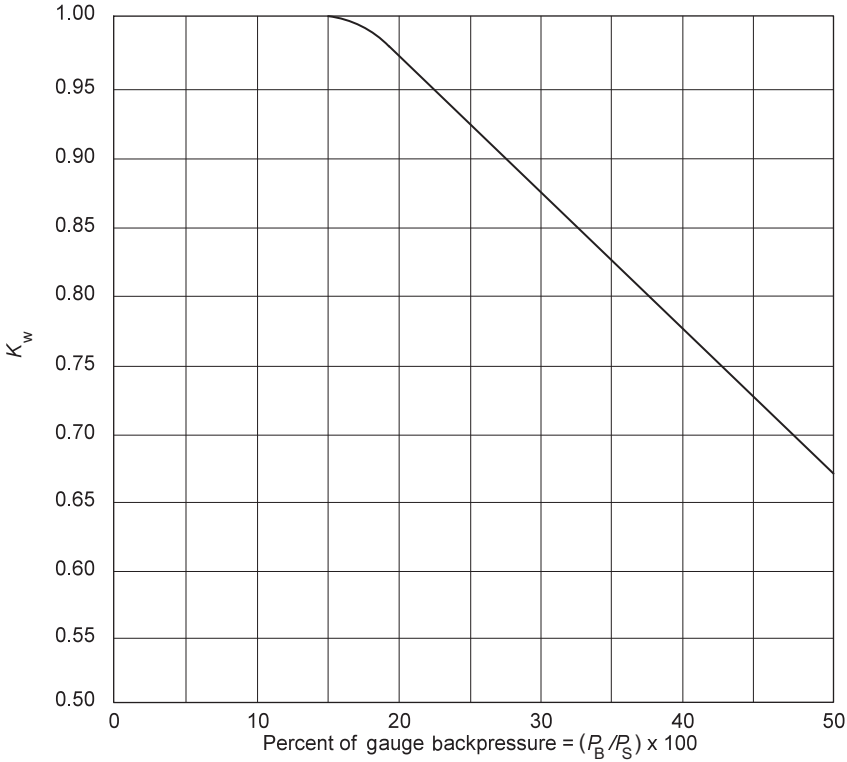

K_W = correction factor due to back pressure.
P_B = back pressure, in psig.
P_S = set pressure, in psig.

Note: The curve above represents values recommended by various manufacturers. This curve may be used when the manufacturer is not known. Otherwise, the manufacturer should be consulted for the applicable correction factor.

Figure 8.32 Capacity correction factor, K_w, due to back pressure for balanced-bellows PRVs in liquid service.
(Courtesy of API Standard 520, Part 1)

should be used because the valve is actually operating at 10%, even though the accumulation is at 21%. When calculating the additional capacity for the first (nonfire) valve at 21% overpressure, a back-pressure correction factor of 1.0 can be used (for back pressures up to 50% of set pressure, see Figure 8.32, Note 3).

Balanced spring-loaded valves allow the use of smaller relief headers because of the larger pressure drops allowed, under maximum relief-flow conditions, as a result of higher allowable back pressure (40%). Balanced valves and relief headers are designed as a system to operate at a higher back pressure. The balanced valve is more expensive than conventional valves; however, the total cost of the use of balanced valves plus the smaller header system may be lower. Capacity is reduced at the larger

back pressure so it may not be the solution for all back-pressure problems. In the bellows model, the bellows is a flexible pressure vessel that has a maximum back-pressure limit that is lower in larger valve sizes. Bellows are available in a limited number of materials and may deteriorate rapidly under certain exposure conditions. Bellows should be checked periodically for leakage. A leaking bellows does not provide back-pressure compensation, and it allows the relief header to leak to the atmosphere. The balanced valve commonly is used to tie a new low-pressure relief load into an existing heavily loaded relief header or to protect the relief-valve top works from corrosive gases in the relief header.

8.3.3.5.3 Pilot-operated PRVs

Back pressure does not affect the valve lift in pilot-operated PRVs. For compressible fluids at critical flow conditions, a back-pressure correction factor of 1.0 should be used for pilot-operated PRVs. Pilot-operated valves should be considered for all clean services within their temperature limitations. They are well suited for pressures below 15 psig (1 barg) and are available with the pilot-pressure sensing line connected to either the valve inlet or a different point. Pilot-operated valves provide tight shutoff with very narrow margins between operating pressure and set pressure.

8.3.3.6 Effects of back pressure and header design on PRV sizing and selection

8.3.3.6.1 Conventional PRVs

The PRV discharge line and flare header should be designed so that the built-up back pressure does not exceed the allowable limits in Section 8.3.3. The flare header system should also be designed to ensure that the superimposed back pressure, caused by venting or relief from another source, does not prevent PRVs from opening at a pressure adequate to protect equipment per the ASME Code. Once the superimposed, built-up, and total back pressures are calculated based on a pressure drop analysis of the discharge system, they should be specified on the data sheet for the PRV under consideration.

8.3.3.6.2 Balanced PRVs

Sizing a balanced PRV is a two-step process. The PRV is sized using a preliminary back-pressure correction factor, K_b. The correction factor could be set initially equal to 1.0 or can be based on an assumed total back pressure. Once a preliminary valve size and capacity are determined, the discharge line and header size can be determined based on pressure drop calculations. The final size, capacity, back pressure, and back-pressure correction factor, K_b, can then be calculated. The back pressure should be included on the data sheet for the PRV under consideration.

8.3.3.6.3 Pilot-operated PRVs

The set pressure and capacity are not affected by back pressure for compressible fluids at critical flow conditions. Tailpipe and flare header sizing are typically based on other considerations. Outlet pipe sizing and flare header sizing are discussed in more detail in *API Standard 521*.

8.4 Relieving pressure

8.4.1 General

The relieving pressure, P_1, used in the various sizing equations, is the inlet pressure of the PRD at relieving conditions. The relieving pressure is the total set pressure plus overpressure. The allowable overpressure is established from the accumulation permitted by the ASME CODE. Table 8.1 summarizes the maximum accumulation and set pressure for PRDs in the ASME Code. The examples that follow are also applicable to nonreclosing PRDs.

8.4.2 Operating contingencies

8.4.2.1 Single-device installation

In accordance with the requirements of the ASME Code, accumulated pressure should be limited to 110% of the MAWP in vessels that are protected by a single PRD sized for operating (nonfire) contingencies. The allowable accumulation is 3 psi (21 kPa) when the MAWP is between 15 psig (103 kPag) and 30 psig (207 kPag) in accordance with the ASME Code. Table 8.2 is an example illustrating the relieving pressure for a single device whose set pressure is less than or equal to the vessel's MAWP.

Table 8.1 Set pressure and accumulation limits for pressure relief devices

Contingency	Single device installations		Multiple device installations	
	Maximum set pressure (%)	Maximum accumulated pressure (%)	Maximum set pressure (%)	Maximum accumulated pressure (%)
Nonfire case				
First relief device	100	110	100	116
Additional device(s)	-	-	105	116
Fire case				
First relief device	100	121	100	121
Additional device(s)	-	-	105	121
Supplemental device	-	-	110	121

Note: All values are percentages of the maximum allowable working pressure.
(Courtesy of API Standard 520, Part 1)

Table 8.2 Example determination of relieving pressure for operating contingencies for a single-relief device installation

Characteristic	Value
Relief device set pressure equal to MAWP	
Protected vessel MAWP, psig (kPag)	100.0 (689)
Maximum accumulated pressure, psig (kPag)	110.0 (758)
Relief device set pressure, psig (kPag)	100.0 (689)
Allowable overpressure, psi (kPa)	10.0 (69)
Barometric pressure, psia (kPa)	14.7(101)
Relieving pressure, P_1, psia (kPa)	124.7(860)
Relief device set pressure less than MAWP	
Protected vessel MAWP, psig (kPag)	100.0 (689)
Maximum accumulated pressure, psig (kPag)	110.0(758)
Relief device set pressure, psig (kPag)	90.0(621)
Allowable overpressure, psi (kPa)	20.0(138)
Barometric pressure, psia (kPa)	14.7(101)
Relieving pressure, P_1, psia (kPa)	124.7 (860)

Note: The above examples assume a barometric pressure of 14 7 psia (101.3 kPa). The barometric pressure corresponding to site elevation should be used.
(Courtesy of API Standard 520, Part 1)

8.4.2.2 Multiple-device installation

A multiple-device installation requires the combined capacity of two or more PRDs to relieve a given overpressure contingency. Per the ASME Code, the accumulated pressure is limited to 116% of the MAWP in vessels that are protected by multiple PRDs sized for operating (nonfire) contingencies. The set pressure of the first device should not exceed the MAWP. The set pressure of the additional (supplemental) devices should not exceed 105% of the MAWP. The allowable accumulation is 4 psi (28 kPa) when the MAWP is between 15 psig (103 kPag) and 30 psig (207 kPag). Table 8.3 is an example illustrating the relieving pressure for a multiple-device installation in which the set pressure of the first device is equal to the MAWP of the vessel, and the set pressure of the additional device is 105% of the vessel's MAWP.

8.4.3 Fire contingencies

8.4.3.1 General

Per the ASME Code, the accumulated pressure should be limited to 121% of the MAWP in vessels that are protected by PRDs sized for fire contingencies. This applies to single-, multiple-, and supplemental-device installations. Single or multiple devices sized for fire may also be utilized to relieve pressures in nonfire contingencies. In these cases, they should be sized to relieve at 110% and 116% (of the MAWP) accumulated pressure for the nonfire contingencies is observed.

Table 8.3 Example determination of relieving pressure for operating contingencies for a multiple-relief device installation

Characteristic	Value
First relief device (set pressure equal to MAWP)	
Protected vessel MAWP, psig (kPag)	100.0 (689)
Maximum accumulated pressure, psig (kPag)	116.0 (800)
Relief device set pressure, psig (kPag)	100.0 (689)
Allowable overpressure, psi (kPa)	16.0 (110)
Barometric pressure, psia (kPa)	14.7 (101)
Relieving pressure, P_1, psia (kPa)	130.7 (901)
Additional relief device (set pressure equal to 105% of MAWP)	
Protected vessel MAWP, psig (kPag)	100.0 (689)
Maximum accumulated pressure, psig (kPag)	116.0 (800)
Relief device set pressure, psig (kPag)	105.0 (724)
Allowable overpressure, psi (kPa)	11.0 (76)
Barometric pressure, psia (kPa)	14.7 (101)
Relieving pressure, P_1, psia (kPa)	130.7 (901)

Note: The above examples assume a barometric pressure of 14.7 psia (101.3 kPa). The barometric pressure corresponding to site elevation should be used.
(Courtesy of API Standard 520, Part 1)

8.4.3.2 Single-device installation

When a vessel is protected by a single-device sized for fire, the set pressure should not exceed the MAWP. Table 8.4 is an example illustrating the relieving pressure for a single-device installation whose set pressure is less than or equal the vessel's MAWP.

8.4.3.3 Multiple-device installation

A multiple-device installation requires the combined capacity of two or more devices to relieve overpressure. The set pressure of the first device to open should not exceed the MAWP. The set pressure of the last device to open should not exceed 105% of the MAWP. Table 8.5 is an example illustrating the relieving pressure for a multiple-device installation in which the set pressure of the first device is equal to the vessel's MAWP, and the set pressure of the additional device is 105% of the vessel's MAWP.

8.4.3.4 Supplemental-device installation

A supplemental-device installation provides relieving capacity for an additional hazard created by fire or other unexpected sources of external heat. The set pressure of a supplemental device for fire should not exceed 110% of the MAWP. Table 8.6 is an example illustrating the relieving pressure for a supplemental-device installation in which the set pressure of the first (nonfire) device does not exceed the vessel's MAWP, and the set pressure of the supplemental device is 119% of the vessel's MAWP.

Table 8.4 Example determination of relieving pressure for fire contingencies for a single-relief device installation

Characteristic	Value
Relief device set pressure equal to MAWP	
Protected vessel MAWP, psig (kPag)	100.0 (689)
Maximum accumulated pressure, psig (kPag)	121.0 (834)
Relief device set pressure, psig (kPag)	100.0 (689)
Allowable overpressure, psi (kPa)	21.0 (145)
Barometric pressure, psia (kPa)	14.7 (101)
Relieving pressure, P_1, psia (kPa)	135.7 (936)
Relief device set pressure less than MAWP	
Protected vessel MAWP, psig (kPag)	100.0 (689)
Maximum accumulated pressure, psig (kPag)	121.0 (834)
Relief device set pressure, psig (kPag)	90.0 (621)
Allowable overpressure, psi (kPa)	31.0 (214)
Barometric pressure, psia (kPa)	14.7 (101)
Relieving pressure, P_1, psia (kPa)	135.7 (936)

Note: The above examples assume a barometric pressure of 14.7 psia (101.3 kPa). The barometric pressure corresponding to site elevation should be used.
(Courtesy of API Standard 520, Part 1)

Table 8.5 Example determination of relieving pressure for fire contingencies for a multiple-relief device installation

Characteristic	Value
First relief device (set pressure equal to MAWP)	
Protected vessel MAWP, psig (kPag)	100.0 (689)
Maximum accumulated pressure, psig (kPag)	121.0 (834)
Relief device set pressure, psig (kPag)	100.0 (689)
Allowable overpressure, psi (kPa)	21.0 (145)
Barometric pressure, psia (kPa)	14.7 (101)
Relieving pressure, P_1, psia (kPa)	135.7 (936)
Additional relief device (set pressure equal to 105% of MAWP)	
Protected vessel MAWP, psig (kPag)	100.0 (689)
Maximum accumulated pressure, psig (kPag)	121.0 (834)
Relief device set pressure, psig (kPag)	105.0 (724)
Allowable overpressure, psi (kPa)	16.0 (110)
Barometric pressure, psia (kPa)	14.7 (101)
Relieving pressure, P_1, psia (kPa)	135.7 (936)

Note: The above examples assume a barometric pressure of 14.7 psia (101.3 kPa). The barometric pressure corresponding to site elevation should be used.
(Courtesy of API Standard 520, Part 1)

Table 8.6 Example determination of relieving for fire contingencies for a supplemental valve installation

Characteristic	Value
First relief device (set pressure equal to MAWP)	
Protected vessel MAWP, psig (kPag)	100.0 (689)
Maximum accumulated pressure, psig (kPag)	121.0 (834)
Relief device set pressure, psig (kPag)	100.0 (689)
Allowable overpressure, psi (kPa)	21.0 (145)
Barometric pressure, psia (kPa)	14.7 (101)
Relieving pressure, P_1, psia (kPa)	135.7 (936)
Supplemental relief device (set pressure equal to 110% MAWP)	
Protected vessel MAWP, psig (kPag)	100.0 (689)
Maximum accumulated pressure, psig (kPag)	121.0 (834)
Relief device set pressure, psig (kPag)	110.0 (758)
Allowable overpressure, psi (kPa)	11.0 (76)
Barometric pressure, psia (kPa)	14.7 (101)
Relieving pressure, P_1, psia (kPa)	135.7 (936)

Note: The above examples assume a barometric pressure of 14.7 psia (101.3 kPa). The barometric pressure corresponding to site elevation should be used.
(Courtesy of API Standard 520, Part 1)

8.5 Sizing for gas or vapor

8.5.1 Critical flow rate

If a compressible gas is expanded across a nozzle, an orifice, or the end of a pipe, its velocity and specific volume increase with decreasing downstream pressure. For a fixed set of upstream conditions, the mass rate of flow through the nozzle will increase until a limiting velocity (velocity of sound) is reached in the nozzle. The flow rate that corresponds to the limiting velocity is known as the critical flow rate. The absolute pressure ratio of the pressure at the nozzle exit at sonic velocity (P_{cf}) to the inlet pressure (P_i) is called pressure ratio. P_{cf} is known as the critical flow pressure.

When downstream pressure is less than the critical flow pressure, the rate of flow through a PRV nozzle is

- dependent on the absolute upstream pressure and
- independent on the downstream pressure.

When downstream pressure is greater than the critical flow pressure, the rate of flow through a PRV nozzle is materially reduced (e.g., when the downstream pressure equals the upstream pressure, there is no flow). Critical flow pressure (P_{cf}) may be estimated by the perfect gas relationship:

$$P_{cf} = P_1 \left(\frac{2}{k-1} \right)^{\frac{k}{k-1}} \tag{8.1}$$

where

P_i = upstream relieving pressure,
k = specific heat ratio for any ideal gas,
P_{cf} = critical flow-through pressure.

PRD sizing equations for vapor or gas service fall into the two categories: critical flow and subcritical flow. If the pressure downstream of the nozzle is less than, or equal to, the critical flow pressure, P_{cf}, then critical flow will occur. If the downstream pressure exceeds the critical flow pressure, P_{cf}, then subcritical flow will occur (see Table 8.7 for typical critical flow pressure values).

8.5.2 Sizing for critical flow

8.5.2.1 General

PRDs in gas or vapor service that operate at critical flow conditions may be sized using Equations 8.2–8.7. Each equation calculates the effective discharge area, A, required to achieve a required flow rate through a PRD. A PRV that has an effective discharge area equal to or greater than the calculated value of "A" is then chosen for the application.

Field units:

$$A = \frac{W}{CK_dP_1K_b}\left(\frac{TZ}{(M)}\right)^{0.5} \tag{8.2}$$

$$A = \frac{V(TZ(M))^{0.5}}{6.32CK_dP_1K_b} \tag{8.3}$$

$$A = \frac{V(TGZ)^{0.5}}{1.175CK_dP_1K_b} \tag{8.4}$$

SI units:

$$A = \frac{W}{CK_dP_1K_b}\left(\frac{TZ}{(M)}\right)^{0.5} \tag{8.5}$$

$$A = \frac{2.67 \times V(TZ(M))^{0.5}}{CK_dP_1K_bK_c} \tag{8.6}$$

$$A = \frac{14.41 \times V(TGZ)^{0.5}}{CK_dP_1K_bK_c} \tag{8.7}$$

where

A = required effective discharge area of the valve (in.^{2} (mm^2)),
W = required flow through the valve (lb/h (kg/h)),

Table 8.7 Properties of gases

Gas	Molecular weight	Ideal gas specific heat ratio ($k = C_p/C_v$) at 60 °F and one atmosphere	Ideal gas critical flow pressure ratio at 60 °F and one atmosphere	Ideal gas specific gravity at 60 °F and one atmosphere	Critical constants		Condensation temperature one atmosphere °F (°C)	Flammability limits (volume % in air mixture)
					Pressure psia (kPa)	Temperature °F (°C)		
Methane[a]	16.04	1.31	0.54	0.554	673 (4640)	−116 (−82)	−259 (−162)	5.0-15.0
Ethane[a]	30.07	1.19	0.57	1.058	718(4950)	90(32)	−128 (−89)	2.9-13.8
Ethylene[a]	28.03	1.24	0.57	0.969	742 (5116)	50(10)	−155 (−104)	2.7-34.8
Propane[a]	44.09	1.13	0.58	1.522	617(4254)	206 (97)	−44 (−42)	2.1-9.5
Propylene	42.08	1.15	0.58	1.453	667 (4599)	197 (92)	−54 (−48)	2.8-10.8
Isobutane[a]	58.12	1.10	0.59	2.007	529 (3647)	273(134)	11 (−12)	1.8-8.4
n-Butane[a]	58.12	1.09	0.59	2.007	551 (3799)	304 (151)	31 (−1)	1.9-8.4
1-Butene	56.10	1.11	0.59	1.937	586 (4040)	296 (147)	21 (−6)	1.4-9.3
Isopentane[a]	72.15	1.08	0.59	2.491	483 (3330)	369 (187)	82 (28)	1.4-8.3
n-Pentane[a]	72.15	1.08	0.59	2.491	490 (3378)	386 (197)	97(36)	1.4-7.8
1-Pentene[a]	70.13	1.08	0.59	2.421	510(3930)	377(192)	86 (30)	1.4-8.7
n-Hexane[a]	86.18	1.06	0.59	2.973	437 (3013)	454 (234)	156(69)	1.2-7.7
Benzene	78.11	1.12	0.58	2.697	714 (4923)	552 (289)	176(80)	1.3-7.9
n-Heptane[a]	100.20	1.05	0.60	3.459	397 (2737)	513(267)	209 (98)	1.0-7.0
Toluene	92.13	1.09	0.59	3.181	590 (4068)	604(318)	231 (111)	1.2-7.1
n-Octane[a]	114.22	1.05	0.60	3.944	362 (2496)	564(296)	258(126)	0.96-6.7
n-Nonane	128.23	1.04	0.60	4.428	332 (2289)	610(321)	303(151)	0.87-2.9
n-Decane	142.28	1.03	0.60	4.912	304 (2096)	632 (333)	345 (174)	0.78-2.6
Air	28.96	1.40	0.53	1.000	547 (3771)	−221 (−141)	−313 (−192)	-
Ammonia	17.03	1.30	0.53	0.588	1636 (11280)	270 (132)	−28 (−33)	15.5-27.0
Carbon dioxide	44.01	1.29	0.55	1.519	1071(7384)	88(31)	−109 (−78)	-
Hydrogen	2.02	1.41	0.52	0.0696	188(1296)	−400 (−240)	−423 (−253)	4.0-74.2
Hydrogen sulfide	34.08	1.32	0.53	1.176	1306(9005)	213(101)	−77 (−61)	4.3-45.5
Sulfur dioxide	64.04	1.27	0.55	2.212	1143 (7881)	316(158)	14 (−10)	-
Steam	18.01	1.33	0.54	0.622	3206 (22104)	706 (374)	212(100)	-

[a]Estimated.
(Courtesy of API Standard 520, Part 1)

C = coefficient determined from an expression of the ratio of specific heats of the gas or vapor at standard conditions,
= can be obtained from Table 8.8,
= 315 when k cannot be determined,
K_d = effective coefficient of discharge,
= 0.975, when a PRV is installed with or without a rupture disk in combination,
= 0.62, when a PRV is not installed and sizing is for a rupture disk in combination,
P_1 = upstream relieving pressure (psia (kPa)),
= set pressure plus allowable overpressure plus atmospheric pressure,
K_b = capacity correction factor due to back pressure, applies to balanced-bellows PRVs only,
= obtained from manufacturer's literature or estimated from Figure 8.31,
K_c = combination correction factor for installations with rupture disk upstream of the PRV,
= 1.0 when a rupture disk is not installed,
= 0.9 when a rupture disk is installed in combination with a PRV and the combination does not have a certified value,
T = relieving temperature of the inlet gas or vapor (°R(°F+460) [K(°C+273)]),
Z = compressibility factor for the deviation of the actual gas from a perfect gas, a ratio evaluated at inlet conditions,
M = molecular weight of the gas or vapor obtained from process data (Table 8.7 lists values for some common fluids),
V = required flow through the valve (in SCFM at 14.7 psia and 60 °F),
G = specific gravity of gas,
= 1.00 for air at 14.7 psia and 60 °F (Nm^3/min at 0 °C and 101.325 kPa),
K = ratio of specific heats (dimensionless).

8.5.3 Sizing for subcritical flow: gas or vapor

8.5.3.1 Conventional and pilot-operated PRVs

When the ratio of back pressure to inlet pressure exceeds the critical pressure ratio, P_{cf}/P_1, the flow through the PRD is subcritical. Equations 8.8–8.13 can be used to calculate the required effective discharge area for a conventional PRV that has its spring setting adjusted to compensate for superimposed back pressure. Equations 8.8–8.13 may also be used for sizing a pilot-operated PRV.

Field units:

$$A = \frac{W}{735 \times F_2 K_c K_d}\left(\frac{ZT}{(M)P_1(P_1 - P_2)}\right)^{0.5} \tag{8.8}$$

$$A = \frac{V}{4645 \times F_2 K_c K_d}\left(\frac{ZT(M)}{P_1(P_1 - P_2)}\right)^{0.5} \tag{8.9}$$

$$A = \frac{V}{864 \times K_c F_2 K_d}\left(\frac{ZTG}{P_1(P_1 - P_2)}\right)^{0.5} \tag{8.10}$$

Table 8.8 **Valves of coefficient *C***

	C			*C*			C			*C*	
k	USC	SI	*k*	USC	SI	*k*	USC	SI	*k*	USC	SI
1.00	315	0.0239	1.26	343	0.0261	1.51	365	0.0277	1.76	384	0.0292
1.01	317	0.0240	1.27	344	0.0261	1.52	366	0.0278	1.77	385	0.0292
1.02	318	0.0241	1.28	345	0.0262	1.53	367	0.0279	1.78	386	0.0293
1.03	319	0.0242	1.29	346	0.0263	1.54	368	0.0279	1.79	386	0.0293
1.04	320	0.0243	1.30	347	0.0263	1.55	369	0.0280	1.80	387	0.0294
1.05	321	0.0244	1.31	348	00264	1.56	369	0.0280	1.81	388	0.0294
1.06	322	0.0245	1.32	349	0.0265	1.57	370	0.0281	1.82	389	0.0295
1.07	323	0.0246	1.33	350	0.0266	1.58	371	0.0282	1.83	389	0.0296
1.08	325	0.0246	1.34	351	0.0266	1.59	372	0.0282	1.84	390	0.0296
1.09	326	0.0247	1.35	352	0.0267	1.60	373	0.0283	1.85	391	0.0297
1.10	327	0.0248	1.36	353	0.0268	1.61	373	0.0283	1.86	391	0.0297
1.11	328	0.0249	1.37	353	0.0268	1.62	374	0.0284	1.87	392	0.0298
1.12	329	0.0250	1.38	354	0.0269	1.63	375	0.0285	1.88	393	0.0298
1.13	330	0.0251	1.39	355	0.0270	1.64	376	0.0285	1.89	393	0.0299
1.14	331	0.0251	1.40	356	0.0270	1.65	376	0.0286	1.90	394	0.0299
1.15	332	0.0252	1.41	357	0.0271	1.66	377	0.0286	1.91	395	0.0300
1.16	333	0.0253	1.42	358	0.0272	1.67	378	0.0287	1.92	395	0.0300
1.17	334	0.0254	1.43	359	0.0272	1.68	379	0.0287	1.93	396	0.0301
1.18	335	0.0254	1.44	360	0.0273	1.69	379	0.0288	1.94	397	0.0301
1.19	336	0.0255	1.45	360	0.0274	1.70	380	0.0289	1.95	397	0.0302
1.20	337	0.0256	1.46	361	0.0274	1.71	381	0.0289	1.96	398	0.0302
1.21	338	0.0257	1.47	362	0.0275	1.72	382	0.0290	1.97	398	0.0302
1.22	339	0.0258	1 48	363	0.0276	1.73	382	0.0290	1.98	399	0.0303
1.23	340	0.0258	1.49	364	0.0276	1.74	383	0.0291	1.99	400	0.0303
1.24	341	0.0259	1.50	365	0.0277	1.75	384	0.0291	2.00	400	0.0304
1.25	342	0.0260	-	-	-	-	-	-	-	-	-

Notes: (1) Values of *C* in USC units apply to Equations 8.2–8.4 only. (2) Values of *C* in SI units apply to Equations 8.5–8.7 only.
(Courtesy of API Standard 520, Part 1)

SI units:

$$A = \frac{17.9 \times W}{F_2 K_c K_d} \left(\frac{ZT}{(M) P_1 (P_1 - P_2)} \right)^{0.5} \tag{8.11}$$

$$A = \frac{47.95 \times V}{F_2 K_c K_d} \left(\frac{ZT(M)}{P_1 (P_1 - P_2)} \right)^{0.5} \tag{8.12}$$

$$A = \frac{258 \times V}{K_c F_2 K_d} \left(\frac{ZTG}{P_1 (P_1 - P_2)} \right)^{0.5} \tag{8.13}$$

where

A = required effective discharge area of the valve (in.^{2} (mm^2));
W = required flow through the valve (lb/h (kg/h));
F_2 = coefficient of subcritical flow (use Figure 8.33);

$$= \left[\left(\frac{k}{k-1} \right) (r)^{\frac{2}{k}} \left[\frac{1 - r^{(k-1)/k}}{1 - r} \right] \right]^{0.5} \tag{8.14}$$

K = ratio of specific heats;
r = ratio of back pressure upstream and relieving pressure (P_2/P_1);

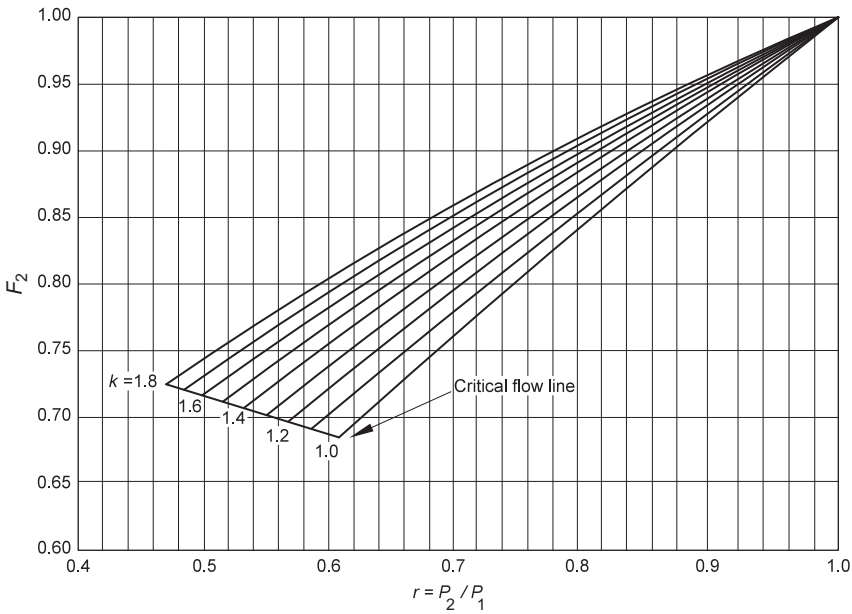

Figure 8.33 Values for F_2 for subcritical flow.
(Courtesy of API Standard 520, Part 1)

K_d = effective coefficient of discharge;
= 0.975, when a PRV is installed with or without a rupture disk in combination;
= 0.62, when a PRV is not installed and sizing is for a rupture disk;
K_c = combination correction factor for installations with a rupture disk upstream of the PRV;
= 1.0, when a rupture disk is not installed;
= 0.9, when a rupture disk is installed in combination with a PRV and the combination does not have a certified value;
Z = compressibility factor for the deviation of the actual gas from a perfect gas, a factor evaluated at relieving inlet conditions;
T = relieving temperature of the inlet gas or vapor (°R(°F+460); [K(°C+273)]);
M = molecular weight of the gas or vapor obtained from process data (Table 8.7 lists values for some common fluids);
P_1 = upstream relieving pressure (psia (kPa));
= set pressure plus the allowable overpressure plus atmospheric pressure (psia (kPa));
V = required flow through the device (SCFD at 14.7 psia and 60 °F (Nm^3/min at 101.325 kPa and 0 °C));
G = specific gravity of gas at standard conditions referred to air at standard conditions (normal conditions);
= 1.00 for air at 14.7 psia and 60 °F (101.325 kPa and 0 °C).

8.5.3.2 Balanced PRVs

Balanced PRVs should be sized using Equations 8.2–8.7. The back-pressure correction factor in this application accounts for flow velocities that are subcritical and the tendency for the disk to drop below full lift (the use of subcritical flow equations is appropriate only where full lift is maintained). The back-pressure correction factor, K_b, for this application should be obtained from the manufacturer.

8.6 Sizing for steam relief

8.6.1 General

PRDs in steam service that operate at critical flow conditions may be sized using Equations 8.14 and 8.15.

Field units:

$$A = \frac{W}{51.5 \times P_1 K_{SH} K_d K_b K_c K_N} \tag{8.15a}$$

SI units:

$$A = \frac{19.05 \times W}{P_1 K_{SH} K_d K_b K_c K_N} \tag{8.15b}$$

where

A = required effective discharge area (in.^{2} (mm^2)),
W = required flow rate (lb/h (kg/h)),
P_1 = upstream relieving pressure (psia (kPa)),
= set pressure plus the allowable overpressure plus the atmospheric pressure,

K_d = effective coefficient of discharge,
= 0.975 when a PRV is installed with or without a rupture disk in combination,
= 0.62 when a PRV is not installed and sizing is for a rupture disk
K_b = capacity correction factor due to back pressure and can be obtained from manufacturer's literature,
= applies to balanced-bellows valves (Figure 8.31),
= 1.0 for conventional PRVs,
K_c = combination correction factor for installations with a rupture disk upstream of the PRV,
= 1.0 when a rupture disk is not installed,
= 0.9 when a rupture disk is installed in combination with a PRV and the combination does not have a certified valve,
K_N = correction factor for the Napier equation,
= 1.0,
= where $P_1 \leq 1500$ psia (10,339 kPa).

Field units:

$$= \frac{0.1906 \times P_1 - 1000}{0.2292 \times P_1 - 1061}$$

where

$$P_1 > 1500\text{psia } (10{,}339\text{kPa}) \text{ and} \leq 3200\text{psia } (22{,}057\text{kPa})$$

SI units:

$$= \frac{0.02764 \times P_1 - 1000}{0.03324 \times P_1 - 1061}$$

$$= \text{where } P_1 > 1500\text{psia } (10{,}339\text{kPa}) \text{ and} \leq 3200\text{psia } (22{,}057\text{kPa})$$

K_{SH} = superheat correction factor (Table 8.9),
= 1.0, for saturated steam at any pressure.

8.7 Sizing for liquid relief: PRVs requiring capacity certification

The ASME Code requires that capacity certification be obtained for PRVs designed for liquid service. The procedure for obtaining capacity certification includes testing to determine the rated coefficient of discharge for the liquid PRVs at 10% overpressure. Equations 8.16 and 8.17 assume that the liquid is incompressible (i.e., the density of the liquid does not change as the pressure decreases from the relieving pressure to the total back pressure).

Field units:

$$A = \frac{Q}{38 K_d K_w K_c K_v} \left(\frac{G}{P_1 - P_2} \right)^{0.5} \tag{8.16}$$

Table 8.9 Superheat correction factors, K_{SH}

Set pressure psig (kPag)	Temperature °F (°C)									
	300 (149)	400 (204)	500 (260)	600(316)	700(371)	800 (427)	900 (482)	1000 (538)	1100 (593)	1200 (649)
15(103)	1.00	0.98	0.93	0.88	0.84	0.80	0.77	0.74	0.72	0.70
20(138)	1.00	0.98	0.93	0.88	0.84	0.80	0.77	0.74	0.72	0.70
40 (276)	1.00	0.99	0.93	0.88	0.84	0.81	0.77	0.74	0.72	0.70
60 (414)	1.00	0.99	0.93	0.88	0.84	0.81	0.77	0.75	0.72	0.70
80 (551)	1 00	0.99	093	088	0.84	0.81	0.77	075	0.72	0.70
100 (689)	1.00	0.99	0.94	0.89	0.84	0.81	0.77	0.75	0.72	0.70
120 (827)	1.00	0.99	0.94	0.89	0.84	0.81	0.78	0.75	0.72	0.70
140 (965)	1.00	0.99	0.94	0.89	0.85	0.81	0.78	0.75	0.72	0.70
160(1103)	1.00	0.99	0.94	0.89	0.85	0.81	0.78	0.75	0.72	0.70
180(1241)	1.00	0.99	0.94	0.89	0.85	0.81	0.78	0.75	0.72	0.70
200(1379)	1.00	0.99	0.95	0.89	0.85	0.81	0.78	0.75	0.72	0.70
220(1516)	1.00	0.99	0.95	0.89	0.85	0.81	0.78	0.75	0.72	0.70
240(1654)	-	1.00	0.95	0.90	0.85	0.81	0.78	0.75	0.72	0.70
260 (1792)	-	1.00	0.95	0.90	0.85	0.81	0.78	0.75	0.72	0.70
280(1930)	-	1.00	0.96	0.90	0.85	0.81	0.78	0.75	0.72	0.70
300 (2068)	-	1.00	0.96	0.90	0.85	0.81	0.78	0.75	0.72	0.70
350 (2413)	-	1.00	0.96	0.90	0.86	0.82	0.78	0.75	0.72	0.70
400 (2757)	-	1.00	0.96	0.91	0.86	0.82	0.78	0.75	0.72	0.70
500 (3446)	-	1.00	0.96	0.92	0.86	0.82	0.78	0.75	0.73	0.70
600 (4136)	-	1.00	0.97	0.92	0.87	0.82	0.79	0.75	0.73	0.70
800 (5514)	-	-	1.00	0.95	0.88	0.83	0.79	0.76	0.73	0.70
1000 (6893)	-	-	1.00	0.96	0.89	0.84	0.78	0.76	0.73	0.71
1250 (8616)	-	-	1.00	0.97	0.91	0.85	0.80	0.77	0.74	0.71
1500(10,339)	-	-	-	1.00	0.93	0.86	0.81	0.77	0.74	0.71
1750(12,063)	-	-	-	1.00	0.94	0.86	0.81	0.77	0.73	0.70
2000(13,786)	-	-	-	1.00	0.95	0.86	0.80	0.76	0.72	0.69
2500(17,232)	-	-	-	1.00	0.95	0.85	0.78	0.73	0.69	0.66
3000 (20,679)	-	-	-	-	1.00	0.82	0.74	0.69	0.65	0.62

(Courtesy of API Standard 520, Part 1)

SI units:

$$A = \frac{11.78 \times Q}{K_d K_w K_c K_v} \left(\frac{G}{P_1 - P_2} \right)^{0.5} \tag{8.17}$$

where

A = required effective discharge area (in.^{2} (mm^2)),
Q = flow rate (gpm (L/min)),
K_d = rated coefficient of discharge obtained from the manufacturer,
= 0.65 when a PRV is installed with or without a rupture disk in combination,
= 0.62 when a PRV is not installed and sizing is for a rupture disk,
K_w = correction factor due to back pressure,
= 1.0, if back pressure is atmospheric,
= Figure 8.32 for balanced-bellows PRVs,
= no correction required for conventional and pilot-operated PRVs,
K_c = combination correction factor for installations with a rupture disk upstream of the PRV,
= 1.0 when a rupture disk is not installed,
= 0.9 when a rupture disk is installed in combination with a PRV and the combination does not have a certified value,
K_v = correction factor due to viscosity (Figure 8.34),
$= \left(0.9935 + 2.878/\mathrm{Re}^{0.5} + 342.75/\mathrm{Re}^{1.5}\right)^{-1.0}$
G = specific gravity of liquid at flowing temperature referred to water at standard conditions,

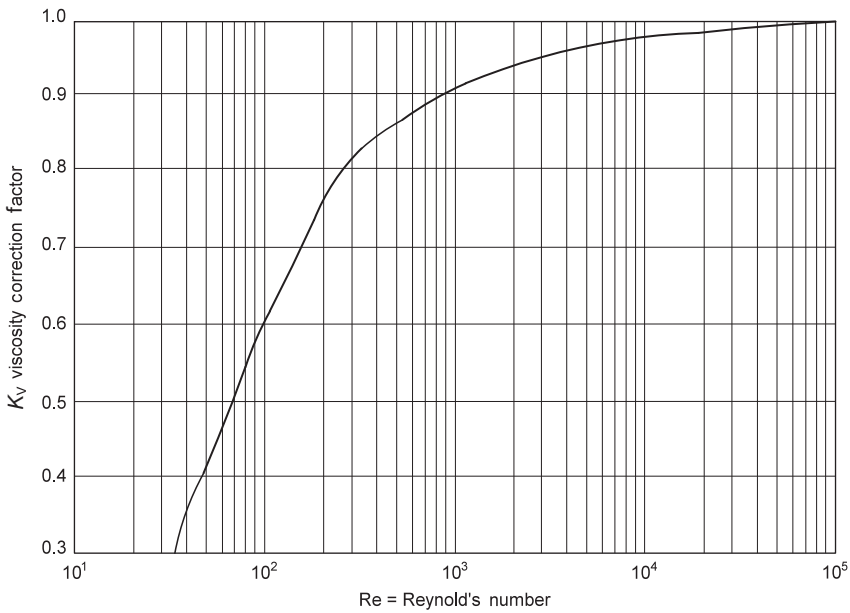

Figure 8.34 Capacity correction factor, K_v, due to viscosity.
(Courtesy of API Standard 520, Part 1)

P_1 = upstream relieving pressure (psig (kPa)),
= set pressure plus allowable overpressure,
P_2 = total back pressure (psig (kPag)).

When a PRV is sized for viscous liquid service, it should be first sized as if it were for a nonviscous-type application ($K_v = 1.0$) so that a preliminary required discharge area, A, can be obtained from Equations 8.16 or 8.17. From API Standard 526 orifice sizes, the next orifice size larger than A should be used in determining the Reynolds number, Re, from either of the following equations.

Field units:

$$\mathrm{Re} = \frac{(2800)QG}{\mu(A)^{0.5}} \tag{8.18}$$

$$\mathrm{Re} = \frac{(12,700)Q}{U(A)^{0.5}} \tag{8.19}$$

SI units:

$$\mathrm{Re} = \frac{(18,800)QG}{\mu(A)^{0.5}} \tag{8.20}$$

$$\mathrm{Re} = \frac{(85,220) \times Q}{U(A)^{0.5}} \tag{8.21}$$

where

Re = Reynolds number (dimensionless),
Q = flow rate at flowing temperature (gpm (L/min)),
G = specific gravity of the liquid at the flowing temperature referred to water at standard conditions,
U = viscosity at the following temperature (Saybolt universal seconds (SSU)),
M = absolute viscosity at the flowing temperature (cp),
G = flow rate (gpm).

Equations 8.19 and 8.21 are not recommended for viscosities less than 100 SSU.

Once the Reynolds number, Re, is determined, the factor K_v is obtained from Figure 8.34. K_v is then applied in Equation 8.16 or 8.17 to correct the preliminary required discharge area. If the corrected area exceeds the chosen standard orifice area, the above calculations should be repeated using the next larger standard orifice size.

8.8 Sizing for liquid relief: PRVs not requiring capacity certification

Before the ASME Code incorporated requirements for capacity certification, valves were generally sized for liquid service using Equation 8.22 or 8.23. This method assumes an effective coefficient of discharge, $K_d = 0.62$, and 25% overpressure. An

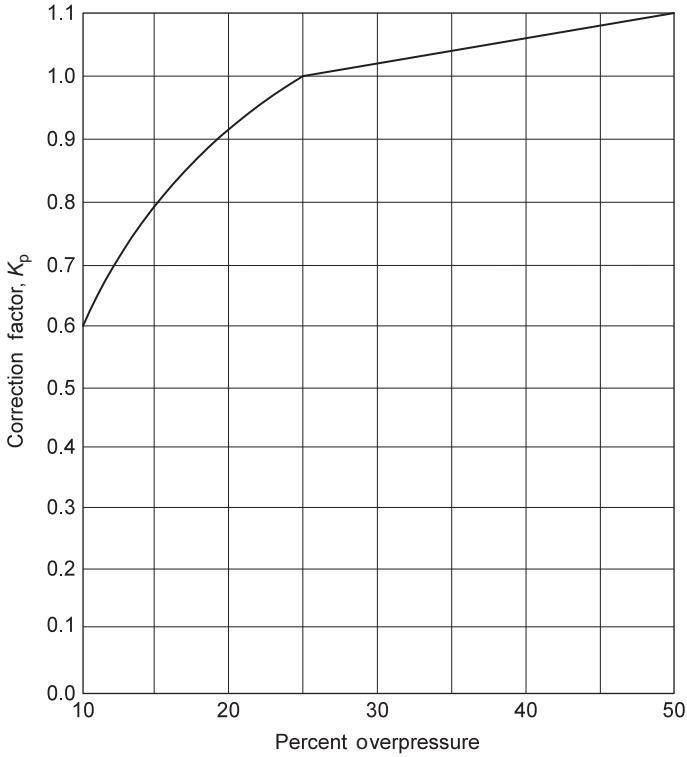

Note: The curve above shows that up to and including 25% overpressure, capacity is affected by the change in lift, the change in the orifice discharge coefficient, and the change in overpressure. Above 25%, capacity is affected only by the change in overpressure. Noncertified valves operating at low overpressure tend to chatter; therefore, overpressures of less than 10% should be avoided.

Figure 8.35 Capacity correction factors due to overpressure for noncertified PRVs in liquid service.
(Courtesy of API Standard 520, Part 1)

additional capacity correction factor, K_p, is needed for relieving pressures other than 25% overpressure (see Figure 8.35). This sizing procedure can be used where capacity certification is not required or was never established. This procedure typically results in an oversized design where a liquid valve is used for an application with 10% overpressure. As shown in Figure 8.35, the K_p correction factor at 10% overpressure is 0.6.

Field units:

$$A = \frac{Q}{38K_dK_wK_vK_p}\left(\frac{G}{1.25P_1 - P_2}\right)^{0.5} \tag{8.22}$$

where

A = required effective discharge area (in.^{2} (mm^2)),
Q = flow rate (gpm (L/min)),
K_d = rated coefficient of discharge obtained from manufacturer,
= 0.62 for preliminary estimates,
K_w = correction factor due to back pressure,
= 1.0, if back pressure is atmospheric,
= Figure 8.32 for balanced-bellows PRVs,
= no correction required for conventional or pilot-operated PRVs,
K_v = correction factor due to viscosity (Figure 8.34),
K_p = correction factor due to overpressure,
= 1.0 at 25% overpressure,
= Figure 8.35 for overpressure other than 25%,
G = specific gravity of the liquid at flowing temperature (referred to water at standard conditions),
P_1 = set pressure (psig (kPag)),
P_2 = total back pressure (psig (kPag)).

8.9 Sizing for two-phase liquid/vapor relief

When a PRV must relieve a liquid and a gas, it may be sized by

- determining the rate of gas and the rate of liquid that must be relieved,
- calculating the orifice area required to relieve the gas and the liquid,
- summing the total areas calculated for liquid and vapor to obtain the total required orifice area.

When the fluid to be relieved through a PRV is a flashing liquid, it is difficult to know what percentage of the flashing actually occurs in the valve in order to estimate the total required area using the above steps.

Methods recommended by API Standard 520, Part 1, for sizing PRDs in two-phase service are presented in API Standard 520, Part 1, Appendix C. A balanced or pilot-operated PRV may be necessary when the increase in back pressure due to flashing or two-phase flow conditions is excessive or cannot be adequately predicted.

8.10 Sizing for fire

8.10.1 General considerations

The method of calculating the relief rate for fire sizing may be obtained from the following sources:

- API RP 520, Part 1, Appendix D
- API RP 521
- API Standard 2510
- NFPA No. 58
- Other local codes and standards

Each of the above references approaches the problem in a slightly different manner. Many systems requiring fire relief will contain liquids and/or liquids in equilibrium with vapor. Fire relief capacity in this situation is equal to the amount of vaporized liquid generated from the heat energy released from the fire and absorbed by the liquid-containing vessel. The most difficult part of this procedure is the determination of heat absorbed.

8.10.2 National Fire Protection Agency 58

National Fire Protection Agency (NFPA) applies to LP gas (propane and butane) systems. It presents the relief capacity requirements for vessels in terms of the rate of discharge of air, Q_a, and area of the vessel according to the equation:

$$Q_a = 53.632 A_c^{0.82} \tag{8.23}$$

where

Q_a = minimum required capacity expressed as CFM of air at standard conditions,
A_c = total outside surface area of container (ft.^{2} (m^2)).

This relief capacity is at 120% of MAWP (20% overpressure is permissible for fire only).

8.10.3 API Standard 2510

API Standard 2510 applies to LP gas (propane and butane) in the design of marine and pipeline terminals. Equation 8.24 expresses relieving requirements for fire in terms of standard cubic feet of air per minute determined at 120% of MAWP:

$$Q_a = 56.632 F (0.6)(A_w)^{0.82} \tag{8.24}$$

where

F = environmental factors due to insulation (Figure 8.36),
Q_a = minimum required capacity expressed as CFM of air at standard conditions,
A_w = total wetted surface area of vessel (ft.^{2}).

Note: The 0.6 factor in Equation 8.24 is applicable only for containers larger than 120,000 gallons and if the equipment location has both good drainage and good firefighting facilities. After determining Q_a, the required relief valve nozzle size is calculated using Equation 8.2 the appropriate properties of air.

8.10.4 API Standard 521 (ISO 23251)

8.10.4.1 Vessels containing liquid and vapor

API Standard 521 applies to refineries and process plants. It expresses relief requirements in terms of heat input from the fire to the vessel. The amount of heat absorbed by a vessel exposed to an open fire is affected by

Environment	F factor
Bare metal vessel	1.0
Insulation thickness: [a, b]	
(inches)	
	0.30
1	0.15
2	0.075
4	0.05
6	0.037
8	0.03
10	0.25
12 or more	
Concrete thickness, in inches	Double above F factor for equal thickness
Water-application facilities	1.0
Depressuring and emptying facilities	1.0
Underground storage	0.0
Earth-covered storage above grade	0.03

Notes:

[a]To take credit for reduced heat input, the insulation shall resist dislodgment by fire-hose stream, shall be noncombustible, and shall not decompose at temperatures up to 1000 degrees Fahrenheit. If insulation does not meet these criteria, the environmental F factor for a bare vessel should be used.

[b]These F factor are based on an arbitrary thermal conductivity value of 4 British thermal units per hour per square foot per degree Fahrenheit per inch of insulation and a temperature differential of 1,600 degrees Fahrenheit when using a heat input value of 21,000 British thermal units per hour per square foot in accordance with conditions assumed in API RP 520. Where these conditions do not exist, engineering judgment should be exercised either in selecting a higher F factor on in providing other means of protecting tanks from fire exposure.

[c]The insulation credit is arbitrarily limited to the F factor shown for The insulation credit is arbitrarily limited to the F factor shown for 12 inches of insulation even though greater thickness may be used. A further credit, if taken, would result in a relieving device size which would be impractically small but may be used if warranted by design considerations.

[d]Water films covering the metal surfaces can, under ideal condition, absorb substantially all incident radiation. However, the reliability of effective water application is dependent upon many factors. Freezing weather, high winds, clogging of system, unreliability of water supply, and tank surface conditions are a few factors which may prevent adequate or uniform water coverage. Because of these uncertainties, the use of an environment F factor other than 1.0 for water spray is generally not used.

[e]Depressuring devices may be used, but no credit for their use should be allowed in sizing pressure relief valves for fire exposure.

Figure 8.36 Environmental factors.
(Courtesy of API Standard 520, Part 1)

- the type of fuel feeding the fire,
- the degree to which the vessel is enveloped by the flames (a function of vessel size and shape), and
- fireproofing measures.

Equation 8.25 is used to evaluate these conditions where there are prompt firefighting efforts and drainage of flammable materials away from the vessel(s):

$$Q = 21{,}000F(A)^{0.82} \tag{8.25}$$

where

Q = total heat absorption (input) to the wetted surface (BTU/h),
F = environmental factors (Figure 8.36),
A = total wetted surface (ft.^{2}) (Table 8.10).

8.10.4.2 Wetted surface area

The surface area wetted by a vessel's internal liquid contents is effective in generating vapor when the area is exposed to fire. To determine vapor generation, only that portion of the vessel that is wetted by its internal liquid and is equal to or less than 25 ft. (8 m) above the source of flame needs to be recognized. The term source of flame usually refers to ground grade but could be at any level at which a substantial spill or pool fire could be substantiated.

Various classes of vessels are operated only partially full. Table 8.10 gives recommended portions of liquid inventory for use in calculations. Portions higher than

Table 8.10 Effects of fire on the wetted surfaces of a vessel

Class of vessel	Portion of liquid inventory	Remarks
Liquid-full, such as treaters	All up to the height of 25 ft.	-
Surge drums, knockout drums, process vessels	Normal operating level up to the height of 25 ft.	-
Fractionating columns	Normal level in bottom plus liquid holdup from all trays dumped to the normal level in the column bottom; total wetted surface up to the height of 25 ft.	Level in re-boiler is to be included if the re-boiler is an integral part of the column
Working storage	Maximum inventory level up to the height of 25 ft. (portions of the wetted area in contact with foundations or the ground are normally excluded)	For tanks of 15 psig operating pressure or less; see API Standard 2000
Spheres and spheroids	Up to the maximum horizontal diameter or up to the height of 25 ft.; whichever is greater	-

25 ft. are normally excluded. Vessel heads protected by support skirts with limited ventilation are normally not included when determining wetted area.

8.10.4.3 Heat absorption equation

Where adequate drainage and firefighting equipment ***do not exist***, Equation 8.26 should be used:

$$Q = 34{,}500F(A)^{0.82} \tag{8.26}$$

Equation 8.26 should be used for process vessels and pressurized storage of liquefied gases. For other storage, whether in pressure vessels or vessels and tanks with a design pressure of 15 psig or lower, see API Standard 2000 for recommended heat absorption rates due to external fire exposure.

The amount of vapor generated is calculated from the latent heat of the material at the relieving pressure of the valve. For fire relief only, this may be calculated at 121% of MAWP. All other conditions must be calculated at 110% of MAWP for single-relief devices. When the latent heat is determined, the required relieving capacity may be found by Equation 8.27:

$$W = \frac{Q}{H_L} \tag{8.27}$$

where

W = flow (lb/h),
Q = heat input (BTU/h),
H_L = latent heat of the liquid exposed to fire (BTU/lb).

The value W is used to size the relief valve orifice using Equation 8.2 or 8.5.

8.10.4.4 Latent heat

Latent heat may be obtained by performing flash calculations that approach a minimum value near the critical pressure. When no better information is available, a conservative minimum value of 50 BTU/lb is typically used.

8.10.4.5 Vessels containing only vapor

The discharge area for PRVs on vessels containing only vapors exposed to open fires can be estimated using Equation 8.28:

$$A = \frac{F' A'}{P_1^{0.5}} \tag{8.28}$$

where

A = effective discharge area of the valve (in.^{2}),
A' = exposed surface area of the vessel (ft.^{2}),
P_1 = upstream relieving pressure (psia),

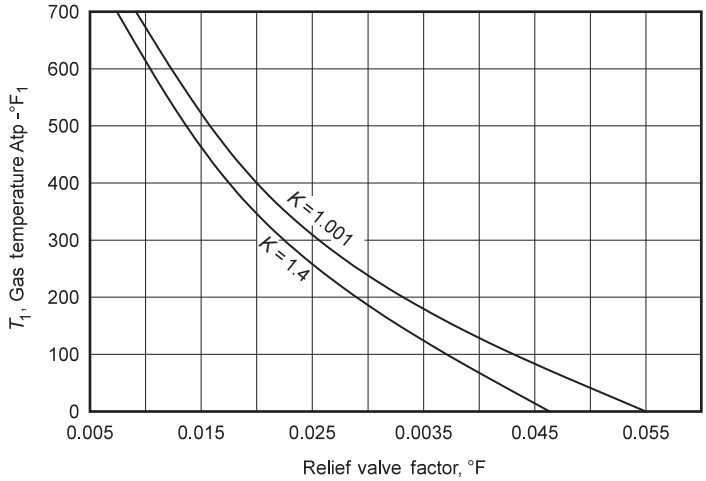

Notes:

1. Fig. 5-9 gives k values for some gases: for others, the values can be determined from the properties of gases as presented in any acceptable reference work.

2. These curves are for vessels or carbon steel.

3. These curves conform to the relationship $F' = \left(\frac{0.1406}{CK}\right)\left(\frac{\Delta T^{1.25}}{T_1^{0.6506}}\right)$

4. The curves are drawn using 2.300°F as the vessel wall temperature. This value is a recommended maximum temperature for the usual carbon steel plate materials whose physical properties at temperature in excess of 1100°F show sign of undesirable tendencies. Where vessels are fabricated from alloy materials, the value for T should be change to a more proper recommended maximum.

It is recommended that the minimum value of F'=0.01 when it is unknown use 0.045.

Figure 8.37 Relief valve factors for noninsulated vessels in gas exposed to open fires. (Courtesy of GPSA Engineering Data Book and API Standard 520, Part 1)

= set pressure plus the allowable overpressure plus the atmospheric pressure (Figure 8.37)

$$F^{/} = \frac{0.1406}{CK_{\mathrm{d}}}\left(\frac{(T_{\mathrm{W}} - T_1)1.25}{T_1^{0.6506}}\right) \tag{8.29}$$

= recommended minimum value = 0.01 (when it is unknown use 0.045),

$$C = 520\left(k\left(\frac{2}{k+1}\right)^{\frac{k+1}{k-1}}\right)^{0.5} \tag{8.30}$$

$K = C_{\mathrm{p}}/C_{\mathrm{v}}$, the specific heat ratio of gas or vapor,
K_{d} = coefficient of discharge obtained from manufacturer,
= 0.975,
T_{w} = vessel wall temperature (°R(°F+460)),
= 1100 °F (maximum for carbon steel plate),

= (use appropriate values for vessels fabricated from alloy materials),
T_1 = gas temperature at the upstream relieving pressure (°R(°F+460))

$$\left(\frac{P_1}{P_n}\right)T_n \tag{8.31}$$

P_n = normal operating gas pressure (psia),
T_n = normal operating gas temperature (°R).

The relief load can be calculated directly in pounds per hour, by rearranging Equation 8.2 and substituting into Equations 8.28 and 8.29 that result in the following equation:

$$W = 0.1406((MW)P_1)\left[\frac{A/(T_W - T_1)^{1.25}}{T_1^{1.1506}}\right] \tag{8.32}$$

where

(MW) = molecular weight of the gas,
$Z = 1$ (assumed),
$K_b = 1$ (assumed).

The derivations of Equations 8.28, 8.29, and 8.32 are based on the physical properties of air and the perfect gas laws. Derivations assume that vessel is uninsulated and has no mass, vessel wall temperature will not reach rupture stress, and there is no change in fluid temperature. These assumptions should be reviewed to ensure that they are appropriate for any particular situation.

8.11 Installation considerations

The installation of a PRV requires careful consideration of inlet piping, pressure-sensing lines (where used), and start-up procedures. Poor installation may render the PRV inoperable or severely restrict the valve's relieving capacity. Either condition compromises the safety of the facility. Many relief valve installations have block valves before and after the relief valve for in-service testing or removal; however, these block valves must be sealed or locked-open.

8.11.1 Inlet piping

API Standard 520, Part 2, and the ASME Code limit the inlet pressure loss to a PRV of 3% of the set pressure where the pressure loss is the total of the inlet loss, line loss, and block valve loss (if used). Loss is calculated using the maximum rated flow through the PRV. To minimize inlet pressure drop to a PRV, a conservative guideline is to keep the equivalent length to diameter (L/D) ratio of the inlet piping to the PRV at 5 or less. For pressure drop limitations and typical piping configurations, see Figures 8.38–8.44.

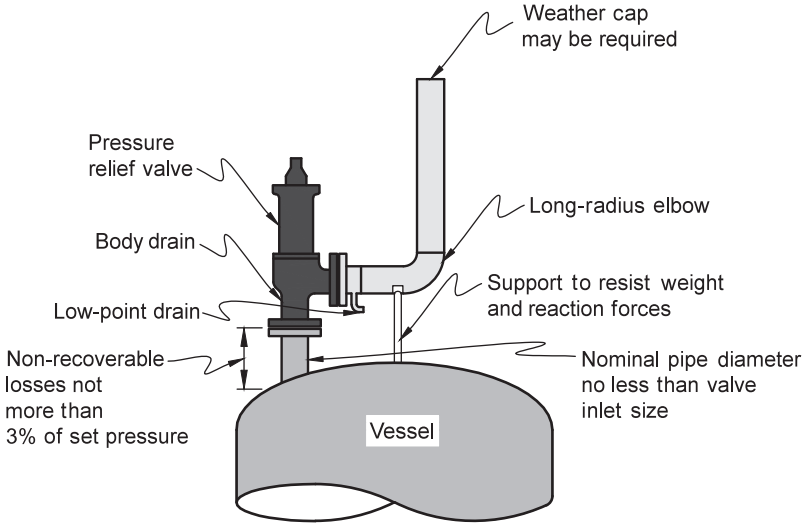

Figure 8.38 Typical PRV installation: atmospheric (open) discharge.
(Courtesy of API Standard 520, Part 2)

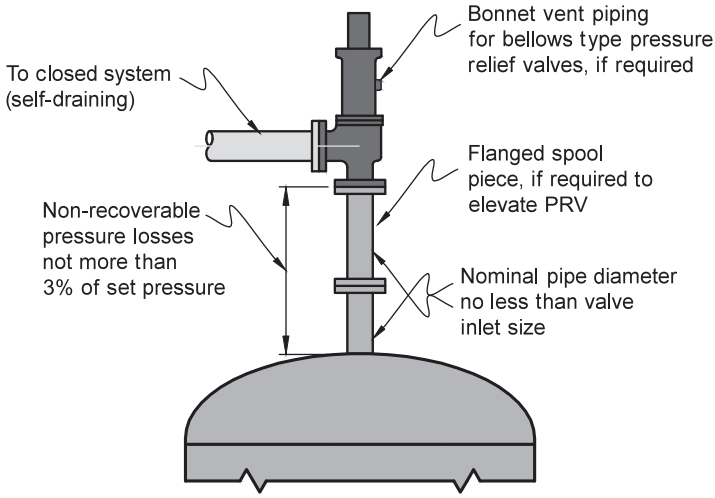

Figure 8.39 Typical PRV installation: closed system discharge.
(Courtesy of API Standard 520, Part 2)

8.11.2 Discharge piping

The discharge piping should be designed so that the back pressure does not exceed an acceptable value for any PRV in the system. Piping diameters generally should be larger than the valve outlet size to limit back pressure. Lift and set pressures of pilot-operated relief valves with the pilot vented to the atmosphere are not affected

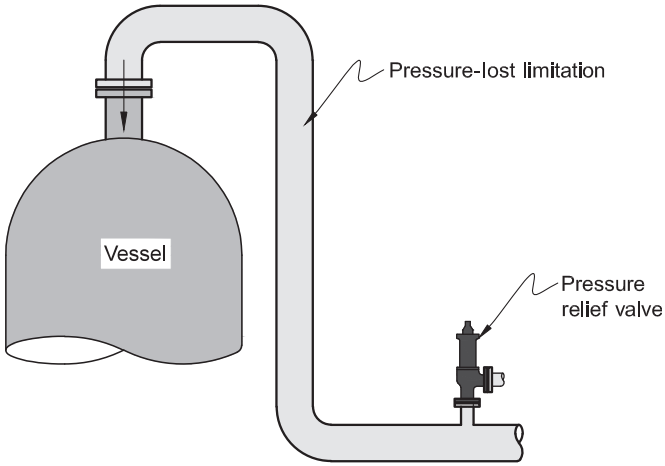

Figure 8.40 Typical PRV mounted on progress line. (Courtesy of API Standard 520, Part 2)

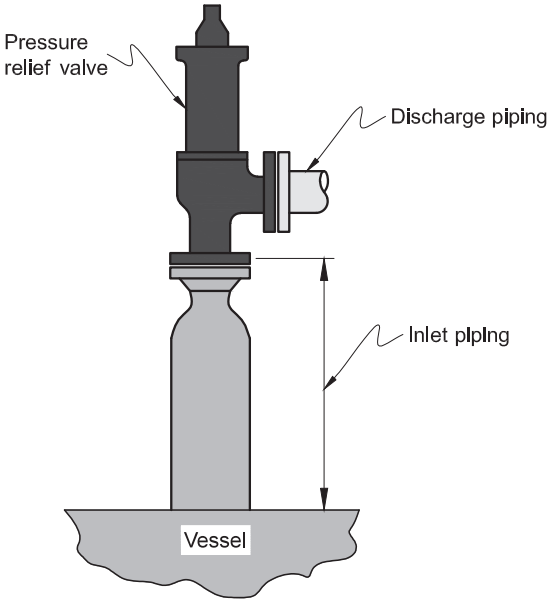

Figure 8.41 Typical PRV mounted on long inlet pipe. (Courtesy of API Standard 520, Part 2)

by back pressure; however, if the discharge pressure can exceed the inlet pressure (e.g., tanks storing low vapor-pressure material), a backflow preventer (vacuum block) must be used. Balanced PRV set pressure will not be as significantly affected by back pressure as direct spring-operated valves. Balanced PRVs will suffer reduced lift as back pressure increases. This is shown in the application of the K_b factor for balanced valves (see Figure 8.31).

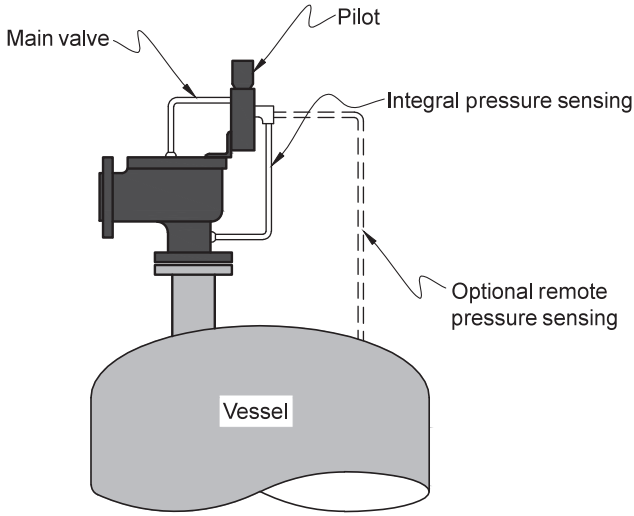

Figure 8.42 Typical pilot-operated PRV installation. (Courtesy of API Standard 520, Part 2)

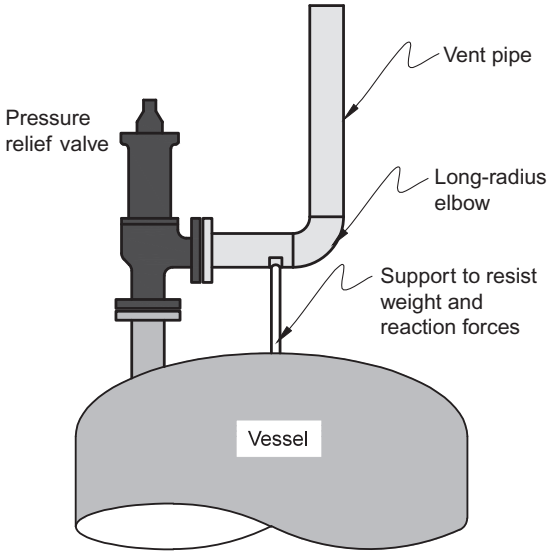

Figure 8.43 Typical PRV installation with vent pipe. (Courtesy of API Standard 520, Part 2)

8.11.3 Reactive force

On high-pressure valves, the reactive forces during relief are substantial and external bracing may be required. Refer to equations in API RP 520, Parts 1 and 2, for computing these forces.

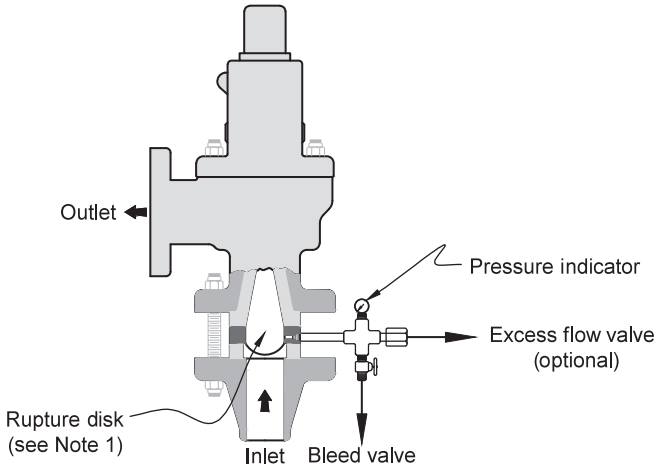

Figure 8.44 Typical rupture disk assemble installed in combination with a PRV. (Courtesy of API Standard 520, Part 2)

8.11.4 Tailpipe considerations

Relief valves that are not connected to a closed relief system should have tailpipes to direct the relieving gases to a safe area from personnel. The tailpipe should be sized for a maximum exit velocity of 500 ft./s (165 m/s). This ensures that the gas/air mixture is below the lower flammable limit or lower explosive limit at approximately 120 pipe diameters away from the tailpipe. Tailpipes should be supported at the bottom of the elbow. A small hole or a "weep hole" (minimum of ¼ in. in diameter) should be installed at the bottom of the elbow to drain liquids that enter through the tailpipe opening. The weep hole should be pointed away from process components, especially those classified as an ignition source.

8.11.5 Rapid cycling

Rapid cycling can occur when the pressure at the valve inlet decreases at the start of PRV flow because of excessive pressure loss in the piping upstream of the valve. Under these conditions, the valve will cycle rapidly, a condition referred to as "chattering." Chattering is caused by the following sequence. The valve responds to the pressure at its inlet. If the pressure decreases during flow below the valve reseat point, the valve will close; however, as soon as the flow stops, the inlet pipe pressure loss becomes zero and the pressure at the valve inlet rises to tank pressure once again. If the vessel pressure is still equal to or greater than the relief valve set pressure, the valve will open and close again. An oversized PRV may also chatter since the valve may quickly relieve enough contained fluid to allow the vessel pressure to momentarily fall back to below set pressure, only to rapidly increase again. Rapid cycling reduces capacity and is destructive to the valve seat in addition to subjecting all the moving parts in the valve to excessive wear. Excessive back pressure can also cause rapid cycling as discussed previously.

8.11.6 Resonant chatter

Resonant chatter occurs when the inlet piping produces excessive pressure losses at the valve inlet and the natural acoustical frequency of the inlet-piping approaches the natural mechanical frequency of the valve's moving parts. The higher the set pressure, the larger the valve size, or the greater the inlet pipe pressure loss, the more likely resonant chatter will occur. Resonant chatter is uncontrollable, that is, once started, it cannot be stopped unless the pressure is removed from the valve inlet.

In actual practice, the valve can break down before a shutdown can take place because of the very large magnitude of the impact force involved. To avoid chattering, the pressure drop from the vessel nozzle to the relief valve should not exceed 3% of the set pressure. API Standard 520, Part 2, covers the design of relief-valve inlet piping. Pilot-operated relief valves with remote-sensing pilots can operate with higher inlet-piping pressure drops.

8.11.7 Isolation "block" valves

There is no industry standard or recommended practice for isolation valves, and practices vary widely. Installed isolation block valves allow the testing of spring-loaded relief valves in place, thus eliminating the need to remove the vessel from service while bench testing the relief valve, and allow the relief device to be isolated from the closed relief system when performing maintenance and repair. The ASME Unfired Pressure Vessel Code allows the use of isolation valves below relief valves. ASME Pressure Vessel Code, Appendix M, describes special mandatory requirements for isolation valves. The ASME Boiler and Pressure Vessel Code prohibits them. Because improper use of an isolation valve may render a PRV inoperative, the design, installation, and management of these block valves should be evaluated carefully to ensure that plant safety is not compromised. API Standard 520, Part 2, shows typical installations of block valves under PRVs in Figures 8.45–8.47.

8.11.8 Relief-valve configurations

There is no industry standard or recommended practice that addresses this topic. Some of the more common PRV configurations are listed here and are shown in Figure 8.48.

Installation of fully open isolation (block) valves upstream and downstream of relief valves. Isolation valves should be car-sealed open (locked-open), and a log should be kept. These valves should be discouraged where the potential overpressure is twice the maximum allowable pressure. A test connection should be provided on all spring-loaded PRVs. The installation of two PRVs (100% redundant) should be considered so that one relief valve can be left in-service at all times.

Installation of pilot-operated valves without isolation valve. This configuration allows for valve testing of pilot set pressure only and requires full-plant (facility) shut-in for relief-valve repair and maintenance.

Installation of two two-way valves, connected by mechanical linkage, and two PRVs. This configuration provides all the advantages of isolation valves. In addition, it is impossible to isolate a process component by mistake. The only disadvantage of this configuration is the initial cost.

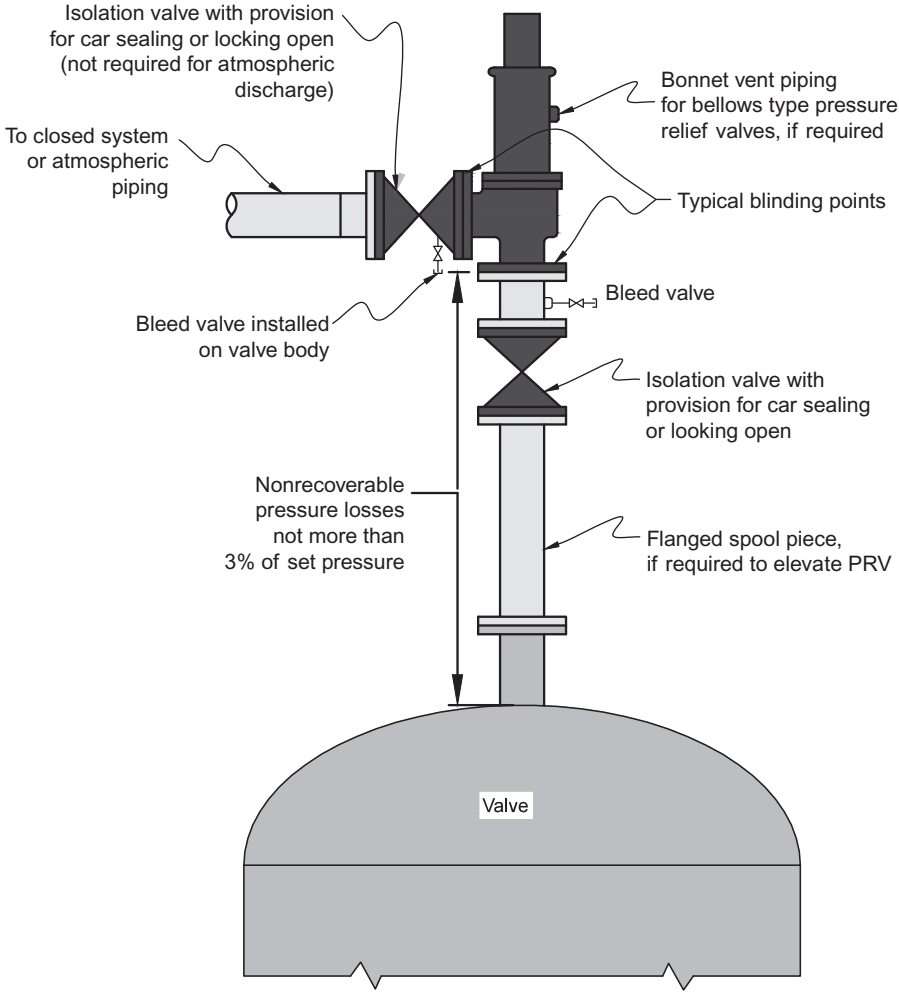

Figure 8.45 Typical PRV installation with isolation valves.
(Courtesy of API Standard 520, Part 2)

Installation of a check valve in lieu of an isolation valve. This configuration is not allowed by the ASME Boiler and Pressure Vessel Code because the check valve may fail or cause excessive pressure drop.

8.11.9 Guidelines for determining the number of relief valves

There is no industry standard or recommended practice for determining the number of relief devices, and installations vary widely. Sometimes, there are two PRDs (100% standby) on vessels receiving production directly from the wells. The primary

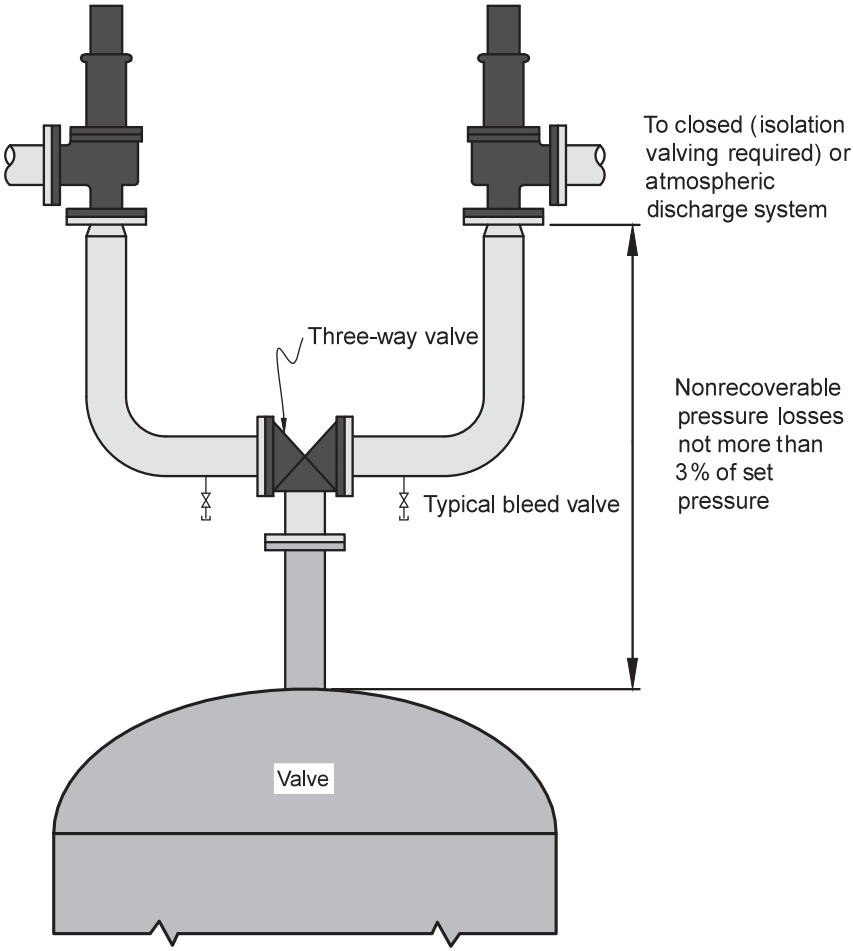

Figure 8.46 Typical PRV installation arrangement for 100% spare relieving capacity. (Courtesy of API Standard 520, Part 2)

relief valve is set at the MAWP. If the second relief device is another PRV, the set pressure of the second PRV is set 10% above the primary relief valve. If the second relief device is a rupture disk (entirely redundant against all possible relieving scenarios), the pressure is set at 15-25% above the primary relief device. This setting ensures that the rupture disk will not rupture when the design primary relieving rate is reached at the set pressure plus 10% overpressure. Primary and standby relief rates are considered adequate for fire sizing.

Some companies install two PRVs on all critical installations so that plant (facility) shutdowns are not required during testing and maintenance. If the secondary relief device is being counted on to provide any portion of any required relieving capacity

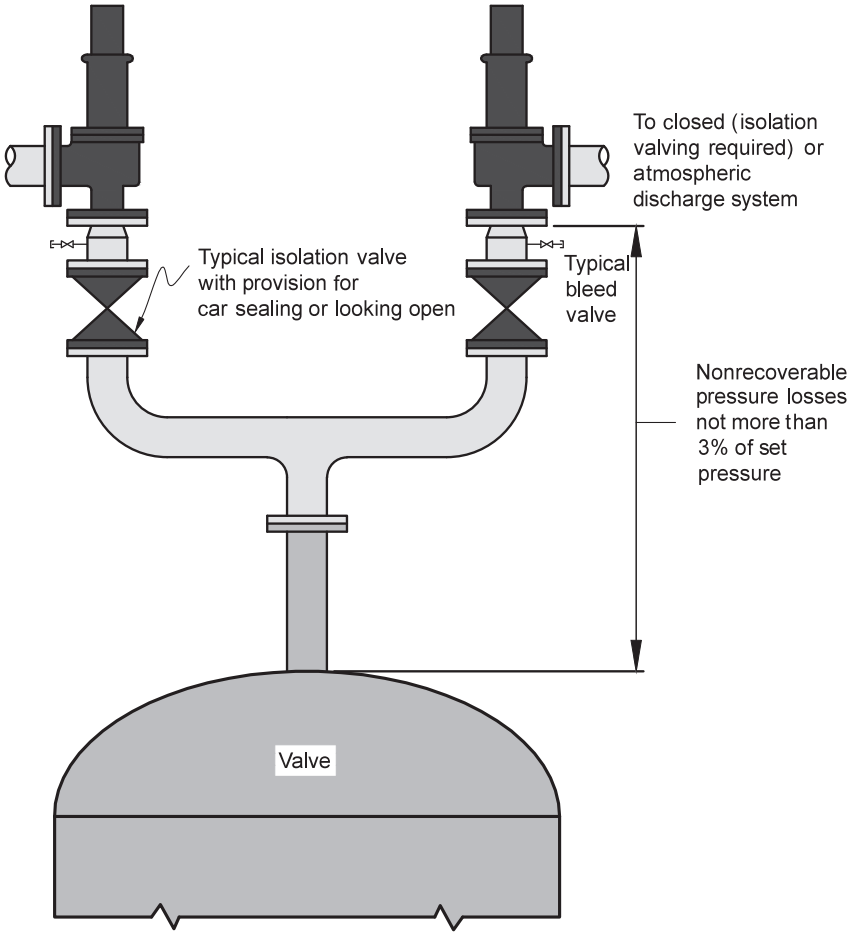

Figure 8.47 Alternative PRV installation arrangement for 100% spare relieving capacity. (Courtesy of API Standard 520, Part 2)

(blocked discharge, gas blowby, fire, etc.), then the secondary device should be set in accordance with the rules of API Standard 520, Parts 1 and 2 (ASME Section VIII, Division 1, Paragraph UG-134).

8.11.10 Liquid-discharge considerations

Condensed mists have liquid droplets that are less than 20-30 μm in diameter. Testing and experience have shown that with a slight wind, the envelope of flammability for this type of mist is the same as that for a vapor. Liquids will settle to grade, thus presenting a fire and pollution hazard; therefore, the PRD should be installed in the vapor space of process vessels with a level safety high (LSH) that alarms and shuts in flow

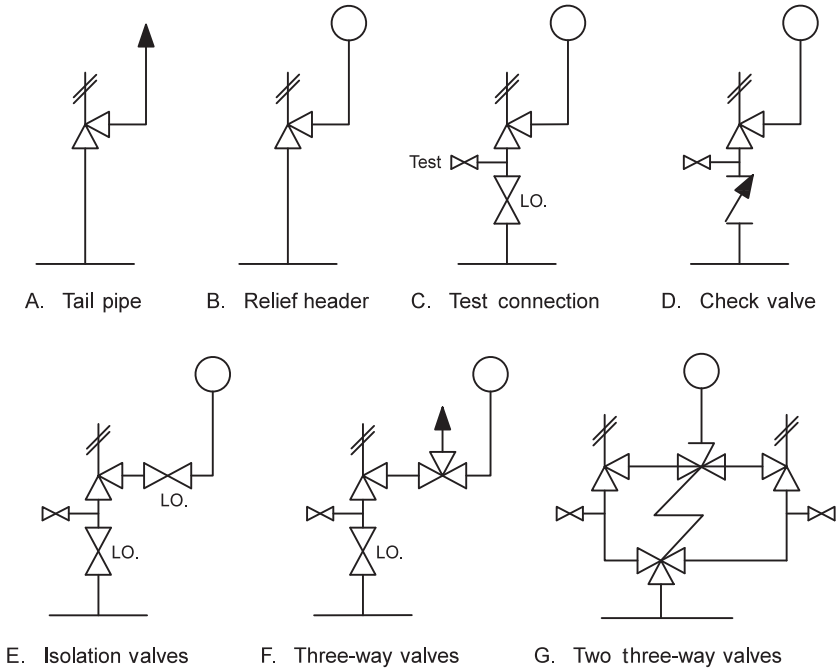

Figure 8.48 Relief valve configurations.

when activated. The LSH should be set no higher than 15% above the maximum operating level, while the relief valve should be set no higher than the MAWP of the process component. Scrubbers and knockout drums should be installed in flare, vent, and relief lines to separate and remove liquid droplets from the discharge.

8.11.11 PRV orifice designations

Figure 8.49 shows standard orifices available by letter designation, orifice area, and body size. The size of a PRV should be checked for blocked discharge, gas blowby, and fire/thermal conditions as described in Section 8.1.

8.12 Disposal-system design

A flare or vent disposal system collects and discharges gas from atmospheric or pressurized process components to the atmosphere to safe locations for final release during normal operations and abnormal conditions (emergency relief). In vent systems, the gas exiting the system is dispersed in the atmosphere. Flare systems generally have a pilot or ignition device that ignites the gas exiting the system because the discharge may be either continuous or intermittent. Gas-disposal systems for tanks operating near atmospheric pressure are often called atmospheric vents or flares, and gas-

Standard orifice designation	Orifice area in.^{2}	1 x 2	1.5 x 2	1.5 x 2.5	1.5 x 3	2 x 3	2.5 x 4	3 x 4	4 x 6	6 x 8	6 x 10	8 x 10
D	0.110	●	●	●								
E	0.196	●	●	●								
F	0.307	●	●	●								
G	0.503			●	●	●						
H	0.785				●	●						
J	1.287					●	●	●				
K	1.838							●				
L	2.853							●	●			
M	3.60								●			
N	4.34								●			
P	6.38								●			
Q	11.05									●		
R	16.0									●	●	
T	26.0											●

Valve body size (Inlet diameter x Outlet diameter), in.

Figure 8.49 Pressure relief value orifice designations.

disposal systems for pressure vessels are called pressure vents or flares. A flare or vent system from a pressurized source may include a control valve, collection piping, flashback protection, and a gas outlet. A scrubbing vessel should be provided to remove liquid hydrocarbons. A flare or vent system from an atmospheric source may include a pressure-vacuum valve, collection piping flashback protection, and a gas outlet. The actual configuration of the flare or vent system depends on the hazard assessment for the specific installation.

API Standard 521 Sections 4 and 5 cover disposal and depressuring system design. *API Standard 521*, *Appendix C*, provides sample calculations for sizing a flare stack. *API Standard 521*, *Appendix D*, shows a flare stack seal drum, a quench drum, and a typical flare installation.

8.12.1 Knockout drums

API Standard 521, *Paragraph 5.4.2*, provides detailed guidance for the design of knockout drums (also called relief drums or flare or vent scrubbers). All flare, vent, and relief systems must include a liquid knockout drum. The knockout drum removes any liquid droplets that carry over with the gas relief sent to the flare. Most flares require the particle size be reduced to a minimum of less than 300 μm. *API RP 14J* suggests sizing for liquid droplets between 400 and 500 μm. Most knockout drums are horizontal with a slenderness ratio (length to diameter) between 2 and 4. A horizontal knockout drum must have a diameter large enough to keep the vapor velocity low enough to allow entrained liquids to settle or drop out.

Knockout drums operated at atmospheric pressure should be sized to handle the greatest liquid volume expected at the maximum rates of liquid buildup and pump out. API Standard 521 suggests 20-30 min of liquid holdup. This is not practical in upstream operations. In onshore operations, it is recommended to take 20% of the maximum potential liquid stream and provide a 10 min liquid holdup. For offshore operations, it is recommended to provide normal separation-retention times (1-3 min on the basis of API gravity) and an emergency dump design to handle the maximum liquid flow with no valves. An emergency sump (disposal) pile is recommended to dispose of the liquid, and a seal in the pile is recommended to contain the back pressure in the drum.

Knockout drums normally are operated at atmospheric pressure. To maintain an explosion, the Maximum allowable working pressure (MAWP) of the knockout drum usually is set at 50 psig (3.3 barg). Stoichiometric hydrocarbon/air explosions produce peak pressures 7-8 times the normal pressure.

8.12.2 Flashback protection

Flashback protection (the possibility that the flame will travel upstream into the system) should be considered for all disposal systems because flashback can result in pressure buildup in upstream piping and vessels. Flashback is more critical where there are tanks or pressure vessels with MAWP less than 125 psig and in flare systems. API RP 14C discusses flashback protection for pressure vessels and flares, and API Standard 2000 discusses atmospheric vents and flares. API RP 14C recommends that vents from atmospheric vessels contain a flame arrestor. Because the flame arrestor can plug, a secondary pressure/vacuum valve without a flame arrestor should be considered for redundancy. The secondary system should be set at a pressure high enough and vacuum low enough so that it will not operate unless the flame arrestor on the primary system is plugged.

Pressure vents with vessels rated 125 psig and above normally do not need flashback pressures above 125 psig that is minimal. When low-pressure vessels are connected to pressure vents, molecular or fluidic seals and purge gas often are used to prevent flashback. If PRVs are tied into the vent, the surge of flow when a relief valve opens could destroy a flame arrestor and lead to a hazardous condition. Also, there is a potential for flame arrestors to become plugged. A means of flame snuffing should be considered for vent systems.

Flares have the added consideration of a flame always being present, even when there is a very low flow rate. They are typically equipped with molecular or fluidic seals and a small amount of purge gas to protect against flashback.

8.12.2.1 Seal drums

Knockout drums are sized with the gas-capacity equations referred to in the chapter on the design of two- and three-phase separators in *Volume 1* of the "Surface Production Operations" series. Liquid seal drums are vessels that are used to separate the relief gases and the flare/header stack by a layer of liquid. Water (or water/glycol mixture) is

normally the sealing fluid. The flare gas (or purge gas) is forced to bubble through a layer of water before it reaches the flare stack. This prevents air or gas from flowing backward beyond the water seal. Seal drums serve as a final knockout drum to separate liquid from the relief gases.

In a deep seal drum, the depth of the sealing fluid is designed to be equal to the staging pressure of the staged flare system. The sealing-fluid depth in most staging seal drums is typically in the range of 2-5 psig, which is equivalent to 5-12.5 ft. (1.5-4 m) of water column. In a shallow seal drum (conventional flashback prevention), the water seals have only a 6-10 in. water-column depth. It is important to design the deep seal drum with a proper gas velocity at the staging point to ensure that all the sealing fluid is displaced quickly at the staging pressure (an effect similar to a fast-acting valve actuator). It is also common to design the deep seal drum with a concentric overflow chamber to collect the displaced sealing fluid. The overflow chamber can be designed to flow back automatically into the sealing chamber once the gas velocity decreases below the rate required for closing off the second stage.

The depth of the liquid seal drum must be considered in calculating the relief-header back pressure. This depth is set by the flare supplier, but it usually can be altered somewhat, with the supplier's concurrence, to suit plant conditions. Typical seal depths are 2 ft. for elevated flares and 6 in. for ground flares. The height of the liquid seal can be determined by

$$h = [(144)P]/p \tag{8.33}$$

where

P = maximum allowable header back pressure,
ρ = sealing-liquid density.

The vessel-free area for gas flow above the liquid level should be a minimum of 3 ft. (1 m) or three times the inlet pipe cross-sectional area to prevent surges of gas flow to the flare and to provide space for disengagement.

API RP 521 states that surging in seal drums can be minimized with the use of V-notches on the end of the dip leg. If the water sloshes in the seal drum, it will cause pulsations in the gas flow to the flare, resulting in noise and light disturbances. Thus, most facilities prefer either a displacement seal or a perforated antislosh baffle. Figure 8.50 shows seal-drum configurations.

8.12.2.2 Molecular seals

Molecular seals cause flow reversal. They normally are located below the flare tip and serve to prevent air entry into the stack. Molecular seals depend on the density difference between air and hydrocarbon gas. Light gas is trapped at the top of the U-tube. A continuous stream of purge gas is required for proper functioning of the gas seal, but the amount of purge gas is much less than would be required without the seal. The main advantages over liquid seals are that they do not slosh and they

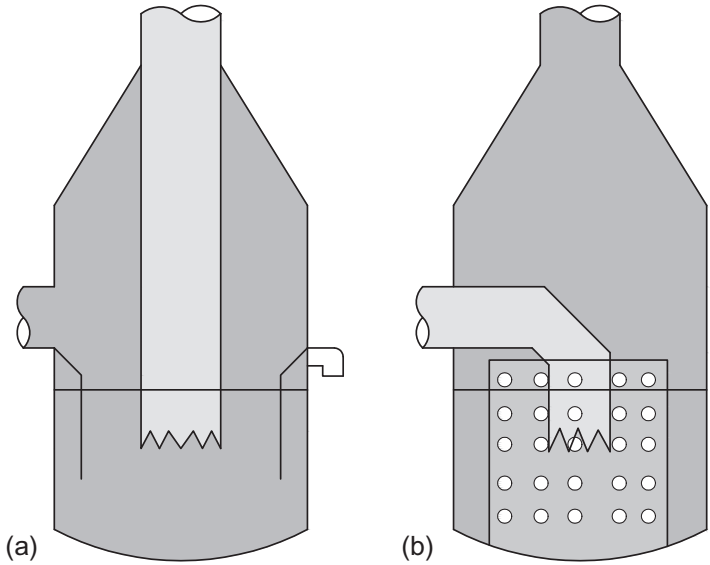

Figure 8.50 Seal-drum configuration with (a) displacement seal and (b) perforated antislosh baffle.
(Courtesy of API Standard 521)

produce much less oily water. Gas seal must be drained, and the drain loop must be sealed. Because a gas seal with an elevated flare is required to keep air out of the flare stack, the liquid seal usually is omitted from an elevated-only flare system. If a vapor-recovery compressor is used, a liquid seal is used to provide a minimum header back pressure.

8.12.2.3 Fluidic seals

Fluidic seals are an alternative to gas seals. Fluidic seals use an open wall-less venturi, which permits flow out of the flare in one direction with very little resistance but strongly resists counterflow of air back into the stack. The venturi is a series of baffles, like open-ended cones in appearance, mounted with the flare tip. The main advantages of fluidic seals are that they are smaller, less expensive, and weigh less and thus have less structural load on the flare stack, than molecular seals. However, fluidic seals require more purge gas than molecular seals.

8.12.2.4 Flame arrestors

Flame arrestors are used primarily on atmospheric vents and are not recommended on pressurized systems. Because of the acceleration of the flame, the flame arrestor must be installed approximately 10 pipe diameters from the exit, which prevents the flame from blowing through the arrestor. The length of the tube and surface area provided

keep the metal cool. The major drawbacks of flame arrestors are that they are easily plugged, can become coated with liquid, and may not be strong enough for pressure relief systems.

8.12.3 Flare stacks

API RP 521, Section 5.4.3, covers the design of elevated flares. *API RP 521, Appendix C*, provides examples of full design of a flare stack. Most flares are designed to operate on an elevated flare stack or on angled booms on offshore platforms.

8.12.3.1 Elevated flare stack designs

Figure 8.51 shows an example of an elevated flare stack design.

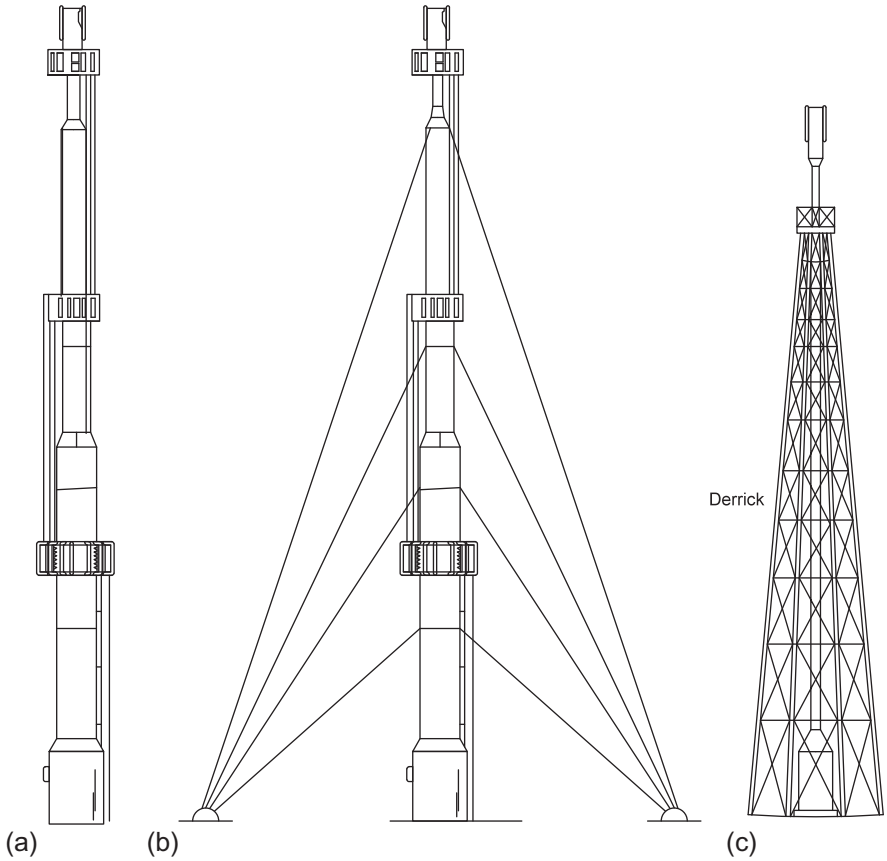

Figure 8.51 Elevated flare stack configurations: (a) self-supported, (b) guyed-supported, and (c) derrick-supported.

8.12.3.1.1 Self-supported stacks

This is the simplest and most economical design for applications requiring short-stack heights (up to 100 ft. (30 m) overall height); however, as the flare height and/or wind loading increases, the diameter and wall thickness required become very large and expensive.

8.12.3.1.2 Guy wire-supported stacks

This is the most economical design in the 100-350 ft. (30-115 m) height range. The design can be a single-diameter riser or a cantilevered design. Normally, sets of three wires are anchored 120° apart at various elevations.

8.12.3.1.3 Derrick-supported stacks

This is the most feasible design for stack heights above 350 ft. (115 m). They use a single-diameter riser supported by a bolted framework of supports. Derrick supports can be fabricated from pipe (most common), angle iron, solid rods, or a combination of these materials. They sometimes are chosen over guy-wire-supported stacks when a limited footprint is desired.

8.12.3.2 Offshore flare-support structures

Because offshore production platforms process very large quantities of high-pressure gas, the relief systems and, therefore, the flare systems must be designed to handle extremely large quantities of gas quickly. By nature, flares normally have to be located very close to production equipment and platform personnel or located on remote platforms. Maximum emergency-flare design is based on emergency shut-in of the production manifold and quick depressurization of the system. Maximum continuous-flare design is based on loss of produced-gas transport, single-compression shutdown, gas-turbine shutdown, etc. Typical flare mountings on an offshore platform are angled boom mounting (most common), vertical towers, or remote flare platforms. Figure 8.52 shows typical offshore flare support structures.

The selection of the flare structure depends on such factors as water depth, the distance between the flare and the production platform, relief gas quantity, toxicity, allowable loading on the flare structure, location of personnel, location of drilling derrick, locations of adjacent platforms, and whether the flaring is intermittent or continuous.

8.12.3.2.1 Flare booms

Flare booms extend from the edge of the platform at an angle of 15-45° and are usually 100-200 ft. long. Sometimes two booms oriented 180° from each other are used to take advantage of prevailing winds. Figure 8.53 shows a diagram of an offshore flare boom.

8.12.3.2.2 Derrick-supported flares

Derrick-supported flares (see Figure 8.54) are the most common flare towers used offshore. They provide the minimum footprint (four-legged design) and dead load, which are critical design parameters for offshore flares and normally are used when space is limited and relief quantities moderate. Disadvantages of derrick-supported flares

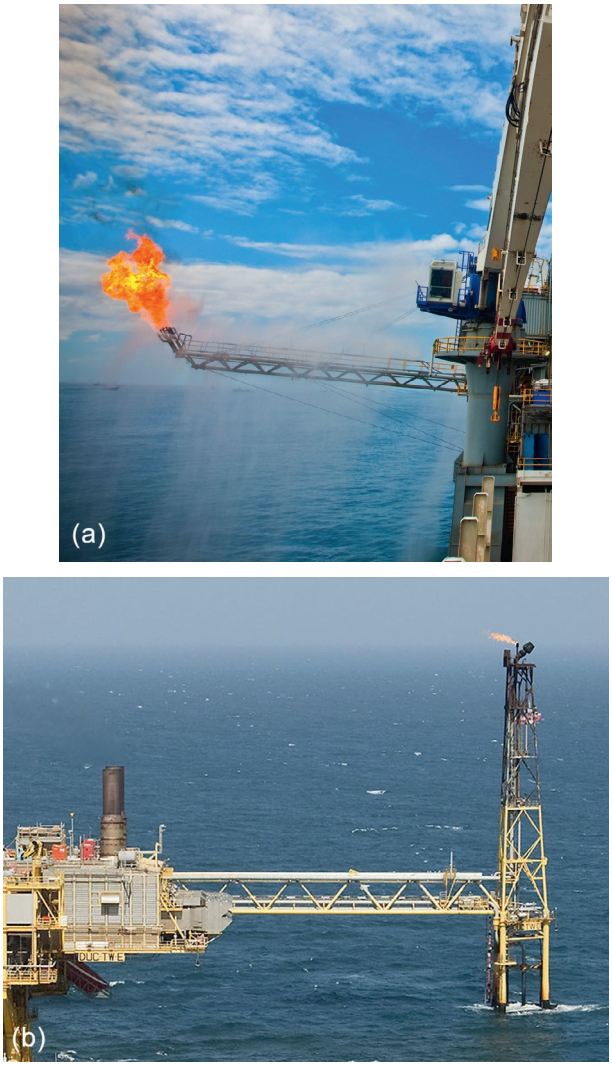

Figure 8.52 Typical offshore flare support structures: (a) angle flare boom and (b) vertical tower.

include possible crude-oil spill onto the platform, interference with helicopter landing, and higher radiation intensities.

8.12.3.2.3 Bridge-supported flares

In the bridge-supported flare (see Figure 8.55), the production platform is connected to a separate platform that is devoted to the flare structure. Bridges can be as much as 600 ft. long, and bridge supports usually are spaced approximately every 350 ft.

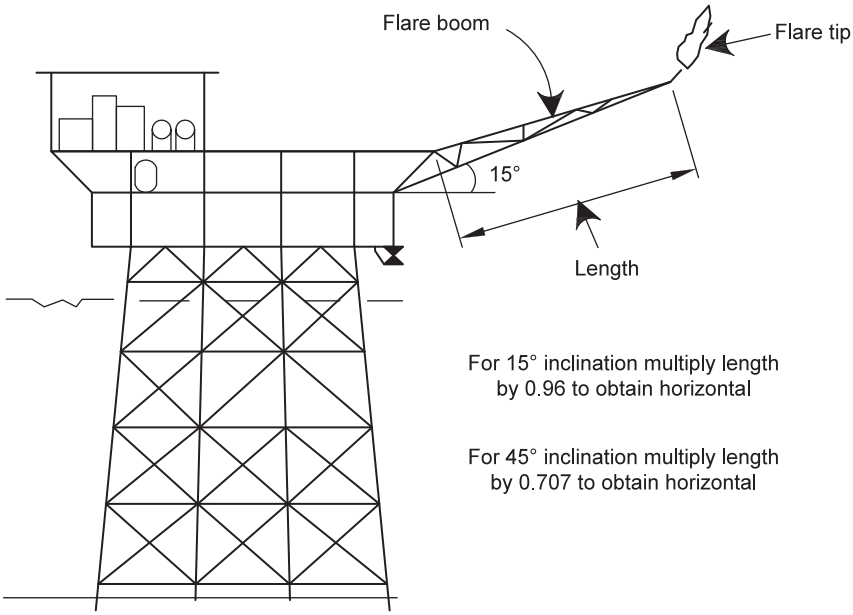

Figure 8.53 Offshore flare boom.

8.12.3.2.4 Remote flares

Remote flares (see Figure 8.56) are located on a separate platform connected to the main platform by a subsea relief line. The main disadvantage of remote flares is that any liquid carryover or subsea condensation will be trapped in pockets in the connecting line.

8.12.3.3 Flare stack design criteria

Important design criteria that determine the size and cost of flare stacks include flare-tip diameter and exit gas velocity, pressure-drop considerations, flare stack height, gas dispersion limitations, flame distortion caused by lateral wind, and radiation considerations.

8.12.3.3.1 Flare-tip diameter and exit gas velocity

The flare-tip diameter should provide a large enough exit velocity so that the flame lifts off the flare tip but not so large as to blow out the flare. The flare diameter and gas velocity normally are determined by the flare supplier. They are sized on the basis of gas velocity, although pressure drop should be checked.

8.12.3.3.2 Flare-tip diameter

Low-pressure flare tips are sized for 0.5 Mach for a peak, short-term, infrequent flow (emergency release) and 0.2 Mach for normal conditions, where Mach equals the ratio of vapor velocity to sonic velocity in that vapor at the same temperature and pressure and is dimensionless. These API Standard 521 recommendations are conservative.

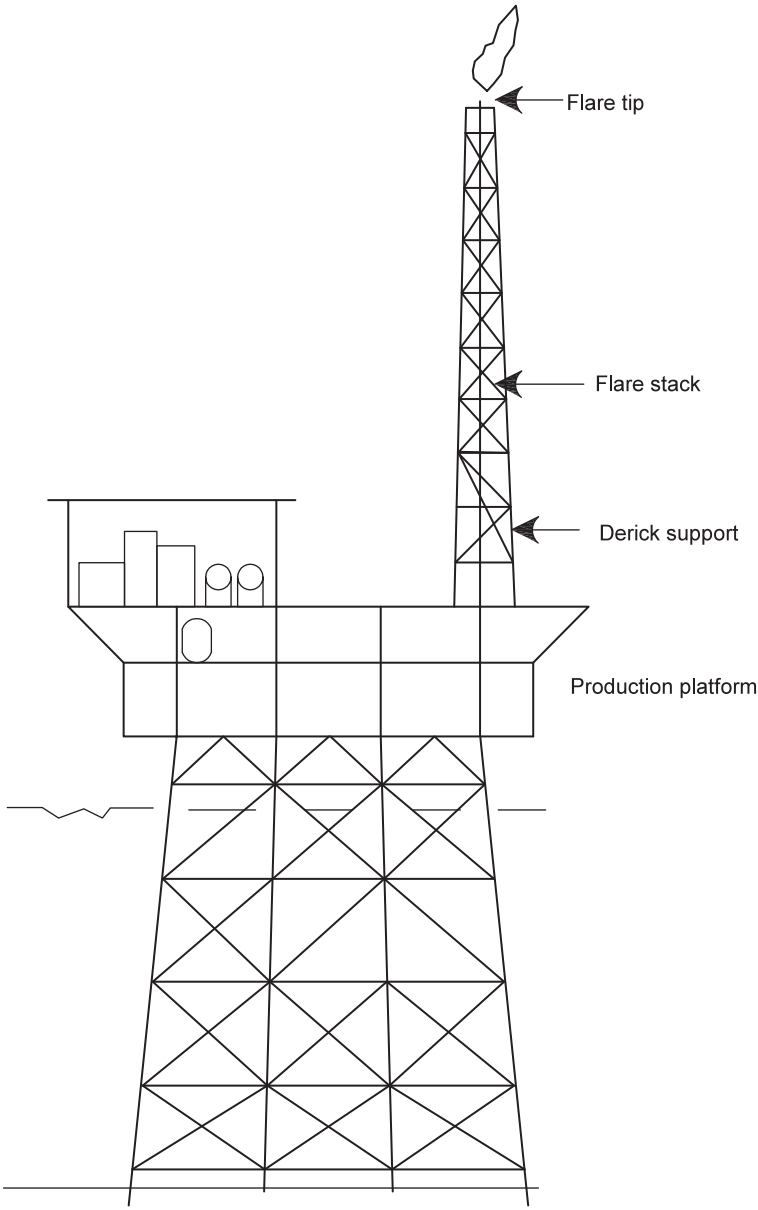

Figure 8.54 Derrick-supported flare.

Some suppliers are designing "utility-type" tips for rates up to 0.8 Mach for emergency releases. For high-pressure flare tips, most manufacturers offer "sonic" flares that are very stable and clean-burning; however, they do introduce a higher back pressure into the flare system. Smokeless flares should be sized for the conditions under which they are to operate smokelessly.

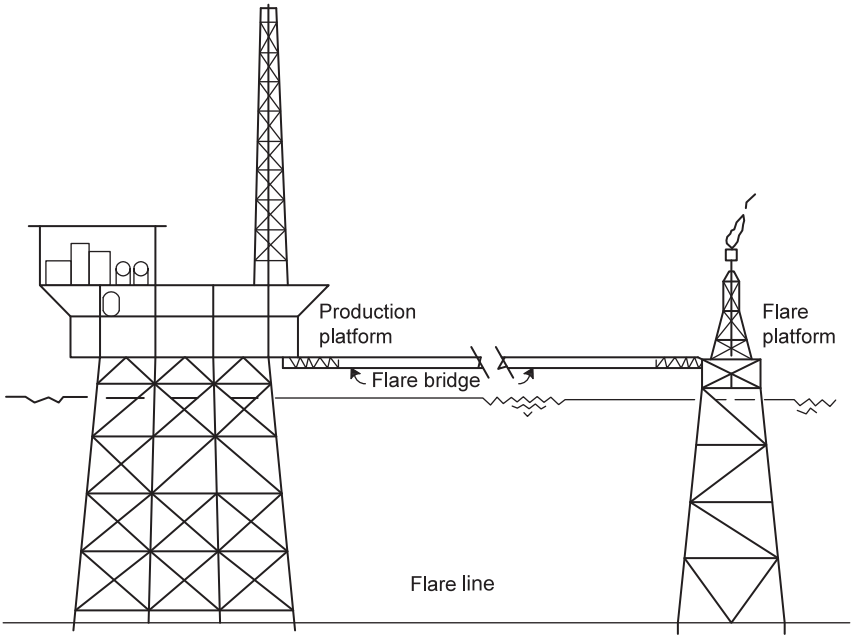

Figure 8.55 Bridge-supported flare.

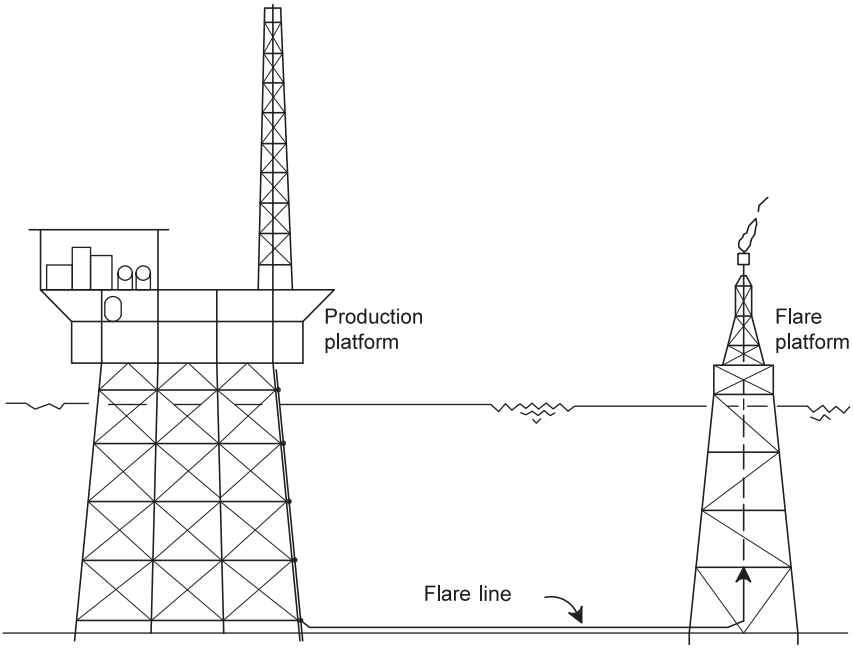

Figure 8.56 Remote flare with subsea relief line.

8.12.3.3.3 Velocity determination

The sonic velocity of a gas can be calculated with

$$V_s = \frac{1720kTZ}{S} \tag{8.34}$$

Gas velocity can be determined from

$$P_{CL} = \frac{60Q_g TZ}{d_i 2P_{CL}} \tag{8.35}$$

The critical flow pressure at the end of the relief system can be calculated with

$$P_{CL} = \frac{(2.02)Q_g}{d_i}(TS/k(k+1))^{0.5} \tag{8.36}$$

where

d_i = pipe inside diameter (in.),
k = ratio of specific heats (C_p/C_v),
P_{CL} = critical pressure at flare tip, always $\geq$14.7 (psia),
Q_g = gas-flow rate (MMSCF/D),
S = specific gravity (ratio),
T = temperature (°R),
V = gas velocity (ft./s),
V_s = sonic velocity (ft./s),
Z = gas compressibility at standard conditions, where air = 1 (psi^{-1}).

8.12.3.3.4 Pressure-drop considerations

Pressure drops as large as 2 psi have been used satisfactorily. If the tip velocity is too small, it can cause heat and corrosion damage. Furthermore, the burning of the gases becomes quite slow and the flame is influenced greatly by the wind. The low-pressure area on the downwind side of the stack may cause the burning gases to be drawn down along the stack for 10 ft. (3 m) or more. Under these conditions, corrosive materials in the stack gases may attack the stack metal at an accelerated rate, even though the top 8-10 ft. (2.75-3 m) of the flare is usually made of corrosion-resistant material. For conventional (open-pipe) flares, an estimate of the total flare pressure drop is 1.5 velocity heads, which is based on nominal flare-tip diameter. The pressure drop is determined by

$$\Delta P_w = \frac{\rho g V^2}{(2g)(144)} = \frac{\rho g V^2}{9274} \tag{8.37}$$

where

g = acceleration due to gravity (32.3 ft./s^2),
V = gas velocity (ft./s),
ΔP_w = pressure drop at the tip (inches of water),
ρg = density of gas (lbm/ft.^{3}).

Figure 8.57 shows a "quick-look" nomograph to determine the flare-tip diameter.

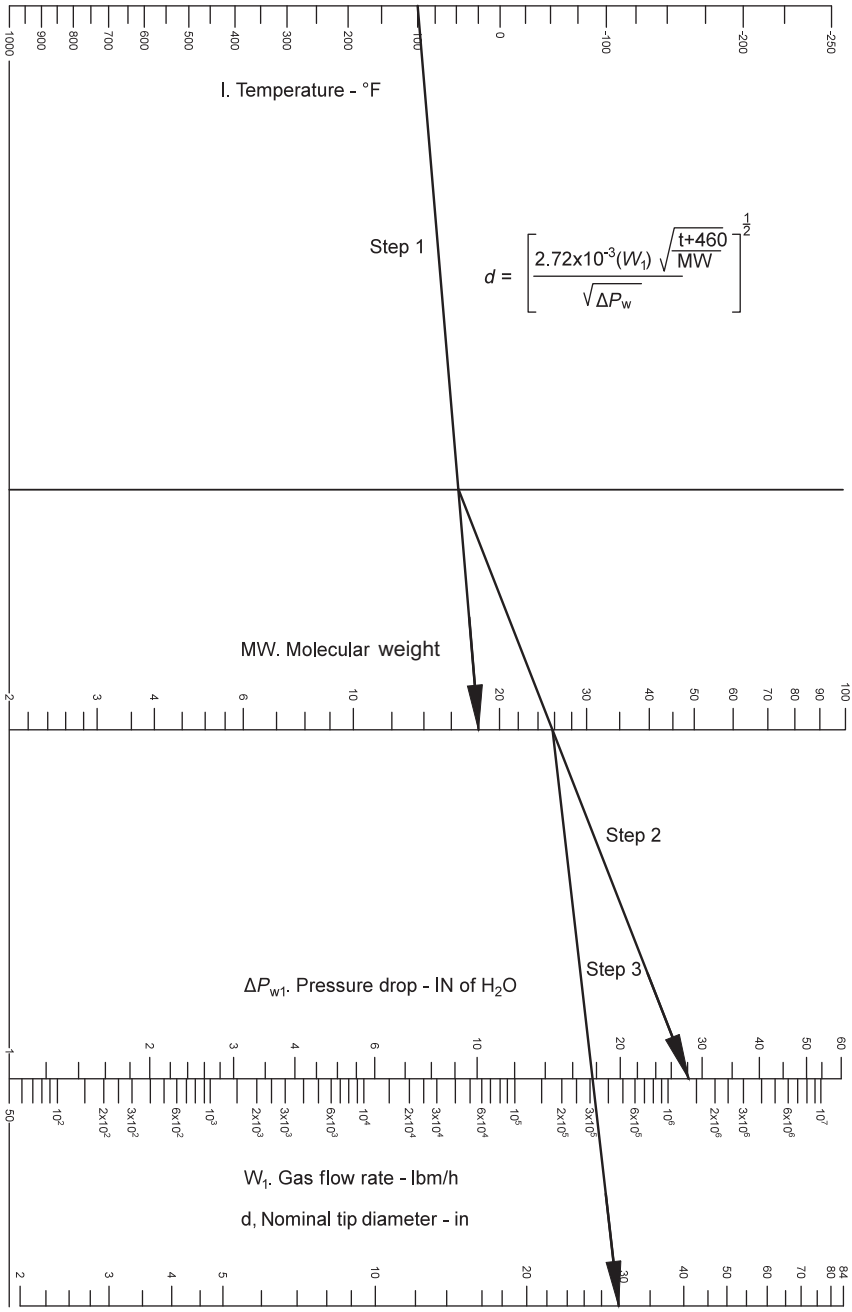

Figure 8.57 Nomograph to determine flare-tip diameter.

8.12.3.3.5 Flare-stack height

The height is generally based on the radiant-heat intensity generated by the flame. The stack should be located so that radiation releases from both emergency and long-term releases are acceptable and so that hydrocarbon and H_2S dispersion are adequate if the flame is extinguished. The stack also should be structurally sound and can withstand wind, earthquake, and other miscellaneous loadings. *API Standard 521*, *Appendix C*, provides guidance on sizing a flare stack.

The Hajek and Ludwig equation (see *API Standard 521*) may be used to determine the minimum distance from a flare to an object whose exposure to thermal radiation must be limited:

$$D = [(\tau EQ)/(4\pi K))]^{0.5} \tag{8.38}$$

where

D = minimum distance from the midpoint of the flame to the object being considered (ft.),
E = fraction of heat radiated,
K = allowable radiation level (BTU/h-ft.^{2}),
Q = heat release (lower heating value) (BTU/h),
τ = fraction of heat intensity transmitted, defined by Equation 8.39.

Table 8.11 shows component emissivity, and Table 8.12 shows allowable radiation levels. Humidity reduces the emissivity values in Table 8.11 by a factor of τ, which is defined by

$$\tau = 0.79(100/r)^{1/16}(100/R)^{1/16} \tag{8.39}$$

where

r = relative humidity (fraction),
R = distance from flare center (feet),
τ = fraction of heat transmitted (in the range of 0.7-0.9).

8.12.3.3.6 Gas dispersion limitations

In some cases, it may be desirable to check the stack height on the basis of atmospheric dispersion of pollutants. Where this is required, the authorities with jurisdiction normally will have a preferred calculation method.

Table 8.11 Emissivity (after API *RP 521*)

Component	Emissivity
Methane	0 11–0.15
Butane	0.22-0.33
Natural gas	0.19-0.23

(Courtesy of API Standard 521)

Table 8.12 Allowable radiation levels[a] (after API *RP 521*)

Condition	Allowable radiation (Btu/h-ft.^{2})		
	RP521	One industry method	NAO
Areas in which operators are not likely to be exposure limited to a few seconds	5000	5000	—
Areas in which operators have access. Exposure limited to a few seconds	3000	1200	—
Equipment indefinitely exposed	5000	1000	3.000
Areas in which emergency action lasting up to 1 min is necessary	2000	-	
Areas in which emergency action lasting several minutes is necessary	1500	-	1,500
Personnel continuously exposed	500	300	440

[a]Values assume an additional solar radiation of 200–300 Btu/h-ft.^{2} is present. Normally design are 200 to 500 Btu/h-ft.^{2}.

8.12.3.3.7 Flame distortion caused by lateral wind

Another factor to be considered is the effect of wind tilting the flame, which varies the distance from the center of the flame. The center of the flame is considered to be the origin of the total radiant-heat release with respect to the plant location under consideration. Figure 8.58 gives a generalized curve for approximating the effect of wind.

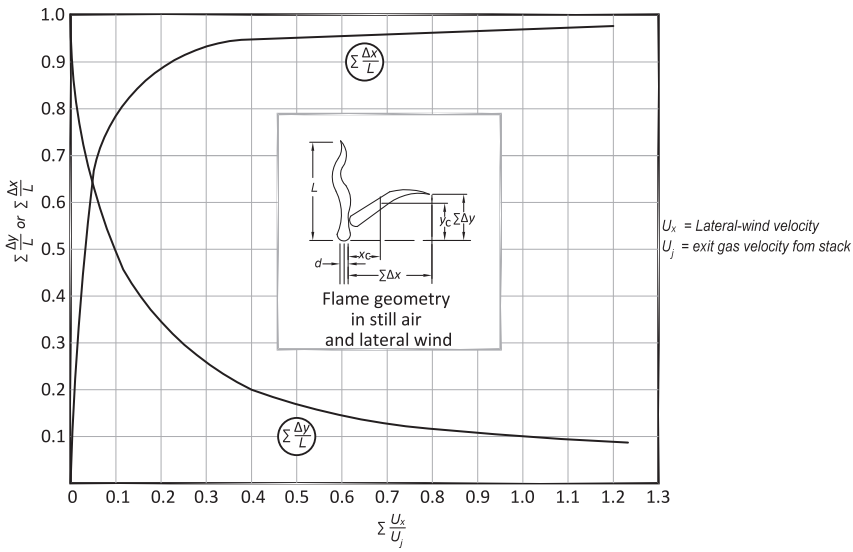

Figure 8.58 Approximate flame distortion caused by lateral wind on jet velocity from flare stack.
(Courtesy of API Standard 521)

8.12.3.3.8 Radiation considerations

There are many parameters that affect the amount of radiation given off by a flare including the type of flare tip, whether sonic or subsonic (HP or LP) or assisted or nonassisted, emissivity of flame produced or flame length produced, amount of gas flow, heating value of gas, exit velocity of flare gas, orientation of flare tip, wind velocity, and humidity level in air.

Several design methods are used for radiation calculations. The most common methods are the API simple method and the Brzustowski and Sommer method. Both methods are listed in *API RP 521*, *Appendix C*. These methods are reasonably accurate for simple low-pressure pipe flares (utility flare) but do not accurately model high-efficiency sonic-flare tips, which produce short, stiff flames. The fourth edition of *API RP 521* suggests that the manufacturers' proprietary calculations should be used for high-efficiency sonic-flare tips.

8.12.3.4 Purge gas

Purge gas is injected into the relief header at the upstream end and at the major branches to maintain a hydrocarbon-rich atmosphere in each branch, into the off-plot relief system, and into the flare stack. The gas volume typically is enough to maintain the following velocities:

- 0.4 ft./s for fluidic seals
- 0.4-3 ft./s for open-ended flares

API Standard 521 states that the oxygen concentration must not be greater than 6% at 25 ft. inside the tip. When there is enough PRV leakage or process venting to maintain the desired back pressure, no purge gas is injected.

8.12.3.5 Burn pits

Burn pits can handle volatile liquids. They must be large enough to contain the maximum emergency flame length and must have a drain valve and pump (if required) to dispose of trapped water. The flare should be pointed down, and the pilot should be reliable. Because of the uncertainty regarding the effects of wind on the center of the flame, it is recommended that the greater of either 50 ft. (17 m) or 25% be added to the calculated required distance behind the tip. Burn pits should be at least 200 ft. (67 m) from property lines. A fence or some other positive means for keeping animals and personnel away from a potential radiation of 1200 BTU/h-ft.^{2} should be installed.

8.12.3.6 Vent design

The size of a vent stack must consider radiation, velocity, and dispersion.

8.12.3.6.1 Radiation

The vent should be located so that radiation levels from ignition are acceptable.

8.12.3.6.2 Velocity

The vent must have sufficient velocity to mix air with gas to maintain the mixed concentration below the flammable limit within the jet-dominated portion of the release. The vent should be sized for an exit velocity of at least 500 ft./s (100 ft./s minimum). Studies indicate that gases with velocities of 500 ft./s or more have sufficient energy in the jet to cause turbulent mixing with air and will disburse gas in accordance with the following equation:

$$W/W_0 = 0.264(Y/D_t) \tag{8.40}$$

where

W = weight flow rate of the vapor/air mixture at distance Y from the end of the tailpipe,
W_0 = weight flow rate of the relief device discharge, in the same units as W,
Y = distance along the tailpipe axis at which W is calculated,
D_t = tailpipe diameter, in the same units as Y.

Equation 8.40 indicates that the distance Y from the exit point at which typical hydrocarbon relief streams are diluted to their lower flammable limit occurs approximately 120 diameters from the end of the discharge pipe. As long as a jet is formed, there is no fear of large clouds of flammable gases existing below the level of the stack. The horizontal limit is approximately 30 times the tailpipe diameter.

Industry practice is to locate vent stacks 50 ft. horizontally from any structure running to a higher elevation than the discharge point. The stacks must vent at least 10 ft. above any equipment or structure within 25-50 ft. above a potential ignition source. Because the flame can be ignited, the height of the stack must be designed or the pit located so that the radiation levels do not violate emergency conditions.

8.12.3.6.3 Dispersion

The vent must be located so that dispersion is adequate to avoid potential ignition sources. The dispersion calculation of low-velocity vents is much more difficult and should be modeled by experts familiar with the latest computer programs. Location of these vents is very critical if the gas contains H_2S because even low concentrations at levels accessible by personnel could be hazardous. The location of low-velocity vents should be checked for radiation in the event of accidental ignition.

8.13 In-class exercises

(1) Size a relief valve to protect a vessel containing hydrocarbon vapors, with a molecular weight of 44. The required capacity at 400 psig set pressure plus 10% accumulation is 35,000 lb/h, and temperature is 750 °F. The "Z" factor under these conditions is 0.55.

(2) Size a conventional relief valve for a positive displacement pump handling light fuel oil (SG = 0.95) at atmospheric temperature. The valve is to be set at 100 psig, with 10% accumulation, operating against 20 psig constant back pressure and capable of passing 380 gpm.

(3) Size a relief valve for fire conditions for the following propane storage tank:

- Tank size = 12'-0" diameter × 42'-0" ss with elliptical ends
- 80% filled
- No insulation (bare steel vessel)
- MAWP = 250 psig (set pressure)
- Operating temperature = 80 °F
- Molecular weight = 44
- Tank in horizontal position
- $P_0 = 110$ psig
- Refer to the attached flow schematic.

Given:

High-pressure separator (*V-200*):

$Q_g = 20$ MMSCF/D
$Q_L = 2500$ BPD, SG = 0.7
MW = 24
$K = 1.25$
$T = 100$ °F
$P = 460$ psig
MAWP = 600 psig

Constant back pressure on PRV-1 = 100 psi

Low-pressure separator (*V-300*):

$Q_g = 10$ MMSCF/D
$Q_{liq} = 2000$ BPD
MW = 24
$Z = 0.8$
$K = 1.25$
$T = 100$ °F
$P = 65$ psig
MAWP = 150 psig

Constant back pressure on PRV-2 = 20 psig

(4) PRV characteristics:

K (conventional and bellows) = 0.97
K (pilot) = 0.93
K (liquid service) = 0.62

(5) $C_1 = 32$
$C_g = 20{,}867$

(6) Operation experience indicates that liquid is typically dirty and contains wax. Refer to the attached flow schematic.

(7) Globe valve (control valve) flow rate determined from the following equation:

$$Q_g = \sqrt{\frac{520}{ST}} C_g P_1 SIN \left(\frac{3417}{C_1} \sqrt{\frac{\Delta P}{P_1}} \right)^{\mathrm{DEG}}$$

(8)

$$\mathrm{SCFH} = \left(1 \times 10^6 \frac{\mathrm{MMSCF}}{D} \right) \left(\frac{1\,\mathrm{day}}{24\,\mathrm{h}} \right)$$

Determine:

(1) Size PRV-2 for worst case between blocked discharge and gas blowby.
(2) Select PRV type and state why. Determine required orifice area for your selection.

Nomenclature

C_p/C_v	Specific heats at constant pressure and temperature (dimensionless)
d	Nominal tip diameter, L, in.
D_i	Pipe inside diameter, L, in.
D	Minimum distance from the midpoint of the flame to the object being considered, L, ft.
D_t	Tailpipe diameter, L, in the same units as Y
E	Fraction of heat radiated
G	Height of liquid seal, L, ft.
k	Ratio of specific heats (C_p/C_v)
K	Allowable radiation level, BTU/h-ft.^{2}
L	Flame length, L, ft.
p	Maximum allowable header back pressure, m/Lt^2, psi
P_{CL}	Critical pressure at flare tip, m/Lt^2, psia
Q	Heat release (lower heating value), BTU/h.
Q_g	Gas-flow rate, MMSCF/D
r	Relative humidity, fraction
R	Distance from flare center
S	Temperature, T, °F
T	Temperature, T, °R
U_x	Lateral-wind velocity, L
U_j	Exit gas velocity from stack, L
V	Gas velocity, L/t, ft./s
V_s	Sonic velocity, L/t, ft./s
W	Weight flow rate of the vapor/air mixture at distance Y from the end of the tailpipe, mL/t
W_f	Gas-flow rate, lbm/h
W_0	Weight flow rate of the relief device discharge in the same units as W, mL/t
X_c	Horizontal distance from flare tip to flame center, L
Y_c	Vertical distance from flare tip to flame center, L
Y	Distance along the tailpipe axis at which W is calculated, L
Z	Gas compressibility at standard conditions, Lt^2/m, psi^{-1}
ΔP_w	Pressure drop at the tip in inches of water
Δ_x	Horizontal flame distortion caused by lateral wind, L, ft.
Δ_y	Vertical flame distortion caused by lateral wind, L, ft.
ρ	Sealing-liquid density, lbm/ft.^{3}
P_g	Density of gas, lbm/ft.^{3}
τ	Fraction of heat intensity transmitted

Further Reading

[1] API RP 14C, Analysis Design, Installation and Testing of Basic Surface Safety Systems for Offshore Production Platforms, seventh ed., API, Washington, DC, 2007.

[2] API RP 14J, Design and Hazards Analysis for Offshore Production Facilities, second ed., API, Washington, DC, 2013.

[3] ASME, Boiler and Pressure Vessel Code, ASME, New York, 2001. Sec. 8, Divisions 1 and 2.

[4] API RP 520, Design and Installation of Pressure Relieving Systems in Refineries, Part I, seventh ed., API, Washington, DC, 2000.

[5] API RP 520, Design and Installation of Pressure Relieving Systems in Refineries, Part 2, fifth ed., API, Washington, DC, 2003.
[6] API RP 521/ISO 23251, Guide for Pressure-relieving and De-pressuring Systems, fourth ed., API, Washington, DC, 1999.
[7] Occupational Safety and Health Standards, regulations, 29 CFR Part 1910, U.S. Dept. of Labor, Washington, DC, March 1999.
[8] API STD 2000, Venting Atmosphere and Low-Pressure Storage Tanks—Non-Refrigerated and Refrigerated, fifth ed., API, Washington, DC, 1999.
[9] API STD 526, Flanged Steel Pressure Relied Valves, sixth ed., API, Washington, DC, 2012.
[10] API STD 527, Seat Tightness of Pressure Relief Valves, fourth ed., API, Washington, DC, 2014.
[11] Y.S. Lai, Performance of a safety relief valve under backpressure conditions, J. Loss Prev. Process Ind. 5 (1) (1992) 55–59.
[12] L. Thompson, O.E. Buxton Jr., Maximum isentropic flow of dry saturated steam through pressure relied valves, Transactions of ASME Journal of Pressure Vessel Technology 101 (1979) 113–117.
[13] Guidelines for Pressure Relief and Effluent Handling Systems, AIChE, New York, NY, 1998.
[14] J.C. Leung, A theory on the discharge coefficient for safety relief valve, J. Loss Prev. Process Ind. 17 (4) (2004) 301–313.
[15] J.C. Leung, Easily size relief devices and piping for two-phase flow, Chem. Eng. Prog. 6 (1996) 28–50.
[16] K.E. Arnold, M.I. Stewart, Surface production operations, in: Design of Gas-Handling Systems and Facilities, vol. 2, Elsevier, Boston, Mass, 1999. Chapter 13-Pressure Relief.
[17] K.E. Arnold, M.I. Stewart, in: Petroleum Engineering Handbook, Facilities and Construction Engineering, vol. III, Society of Petroleum Engineers, Houston, Texas, 2007. Chapter 10-Safety Systems.

Piping system design: Layout, supports, and piping vessels and equipment

9

9.1 Design preparation

Successful piping systems require detailed planning and begin with the process engineer. When the process design is complete, a process flow diagram is prepared. Ideally, the piping and mechanical and instrumentation specialty engineers then design the equipment that will be used to prepare the piping and instrumentation diagram. In many production operations, the specialty engineers are not available, and the facility engineer is required to provide all three services. In some areas, the facility engineer may be required to design the process and the physical requirements of the facility.

Nine types of drawings are developed in sequence from the preliminary block diagram through isometric and spool drawings and structural and electrical one-line drawings. These nine types of drawings, in order of development, are as follows:

- Block diagram
- Process flow diagram (PFD)
- Piping and instrumentation diagram (P&ID)
- Utility flow diagrams (UFDs)
- Layout/equipment arrangement drawings (plot plan)
- Piping drawings
- Piping fabrication or "isometric" or "spool" drawings
- Structural drawings
- Electrical one-line drawings

Each of the above drawings are discussed in detail in Chapter 5, Section 5.1.2.

9.2 Design procedure

Before the designer can choose materials that will provide a safe, durable installation, he or she must first determine the applicable codes, standards, and recommended practices for construction. In addition, the designer must comply with the following:

- Appropriate industry codes, standards, and recommended practices
- Company design practices and specifications
- Authorities having jurisdiction regulatory requirements

The American Society of Mechanical Engineers (ASME) provides a guide to the design and establishes the minimum standards for operations. The discussion below lists only those codes, standards, and recommended practices that are most commonly

Surface Production Operations. http://dx.doi.org/10.1016/B978-1-85617-808-2.00009-2
Copyright © 2016 Elsevier Inc. All rights reserved.

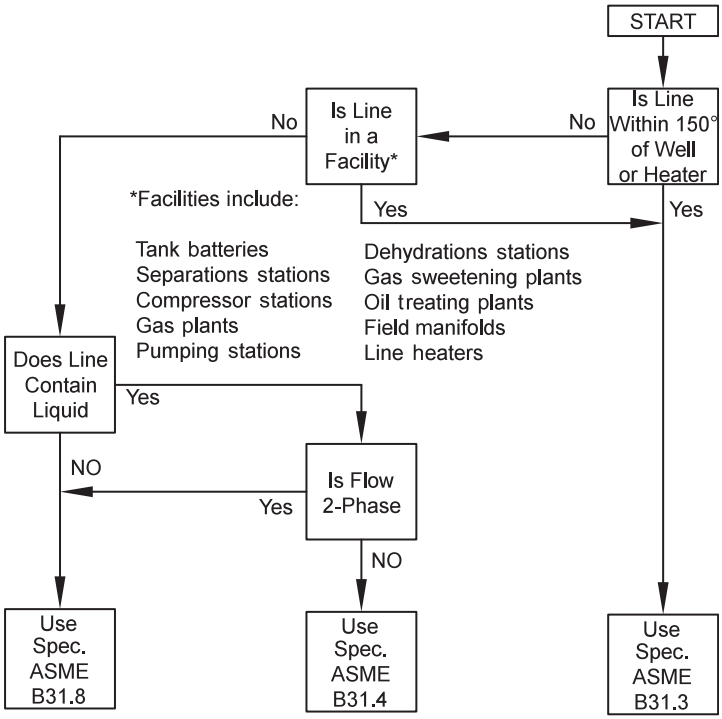

Figure 9.1 ASME Code selection guide.

used in oil and gas production piping. Chapter 2 provides a detailed discussion on standards, codes, and recommended practices. Figure 9.1 will help one determine which code applies. The codes are as follows:

- ASME B31.1: Power Piping
- ASME B31.3: Process Piping
- ASME B31.4: Pipeline Transportation Systems for Liquid Hydrocarbons and Other Liquids
- ASME B31.8: Gas Transmission and Distribution Piping Systems

The codes cover the following:

- Material specification and component standards
- Designation of proper dimensional standards for elements comprising piping systems
- Requirements for the design of component parts and assembled units, including necessary pipe-supporting elements
- Requirements for the evaluation and limitation of stresses, reaction, and movements associated with pressure, temperature, and external forces
- Requirements for the fabrication, assembly, and erection of piping systems
- Requirements for testing and inspection of elements before assembly or erection and of the completed systems after erection
- Operation and maintenance procedures affecting the safety of piping systems

API RP 14E Design and Installation of Offshore Production Platform Piping Systems outline the requirements for offshore platform piping systems. The piping requirements for offshore piping systems are usually more stringent than for onshore installations. Most authorities having jurisdiction (BESEE, MIGAS, Petronas, Petroleum Authority of Thailand, NNPC, Department of Energy, etc.) use API RP 14E as a reference standard, thus, in effect, elevating the practice to code status.

9.3 General piping requirements

9.3.1 General considerations

Equipment in a production facility must be properly located in order to minimize fire potential from venting and leaking combustible materials. Equipment orientation should allow for the maximum use of prevailing winds to enhance facility performance and provide protection of the environment against excessive pollution. Once the major equipment location is determined, the areas open to piping are established.

The first step in planning a piping system is choosing a suitable location. Area contour maps and surveys are helpful. A location should be chosen that requires a minimum amount of fill material (dirt), is adequately isolated from the general public in the event of a catastrophic occurrence, and provides adequate drainage.

9.3.2 Plot plan

The second step in planning a piping system is preparing the plot plan to show the arrangement of major equipment (Figure 9.2). The plot plan includes the following:

- Equipment locations
- Foundation locations
- Excavation drawings
- Paving plan
- Flow diagram transposition
- Construction model (if one is used)

The plot plan is drawn to scale and should depict all

- equipment,
- main pipeways,
- buildings,
- major structures,
- housed electrical gear.

Prevailing summer and winter winds are also shown. Suggested minimum spacing guidelines for gas plants are shown in Figure 9.3. Suggested minimum spacing guidelines for production facilities in onshore oil and gas field locations are shown in Figure 9.4.

The preliminary plot plan should be analyzed for equipment layout spacing and the potential drifting of heavy vapors into areas containing an ignition source.

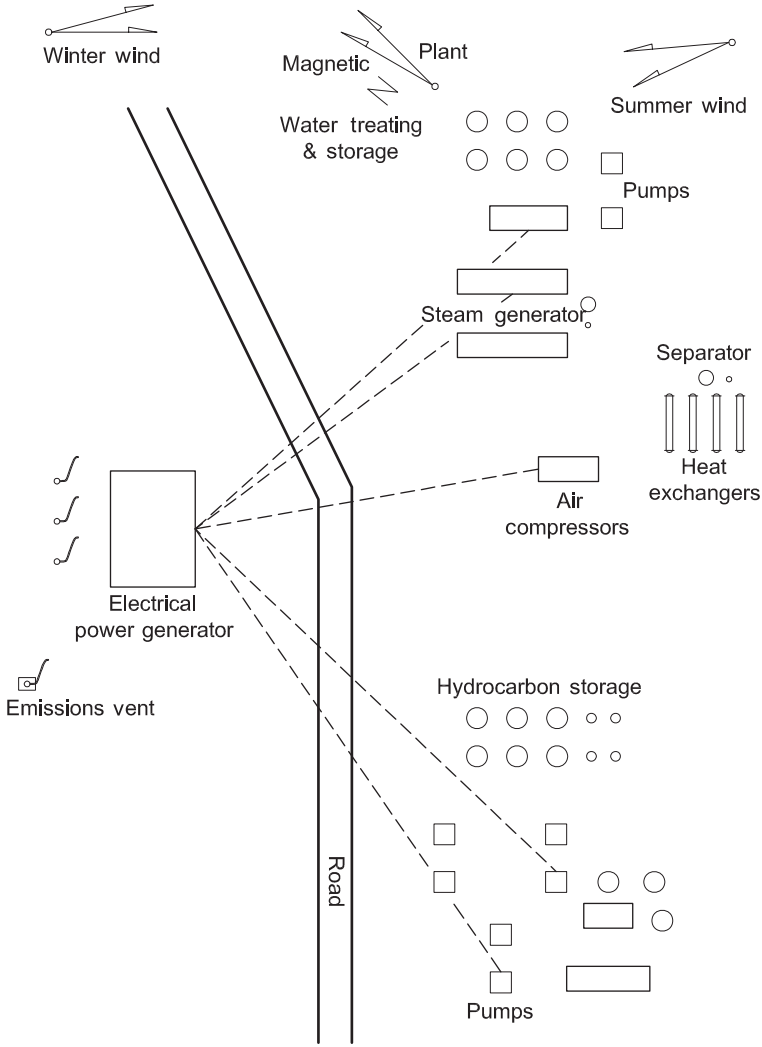

Figure 9.2 Preliminary onshore plot plan.

The designer should check to ensure that prevailing winds aid rather than interfere with cooling. Vertical coolers should face into breezes to utilize the wind for cooling. One should observe the surrounding objects, buildings, and trees in the area, if applicable.

The designer should also check the dispersion of emissions and calculate the total annual release to assure that emissions are within allowable limits. Emission points should be located so as to provide acceptable ground-level concentrations. Most plot plans are roughly sketched to establish relative locations. In the past, it was not

MINIMUM DISTANCE IN FEET	SERVICE BUILDING	GAS COMPRESSOR HOUSE	LARGE PROCESS OIL PUMP HOUSE	DISTALLATION AND FRACTIONATION	UTILITIES	PRESSURE TANKS	ATMOSPHERIC TANKS	LOADING RACK	MAIN GAS CONTROL VALVE	FIRE PUMPS	OPEN FLAMES	ORDINARY ELECTRICAL	EMERGENCY CONTROL STATION MINIMUM OF 2	TURRET NOZZLES	FIRE EQUIPMENT HOUSE	FLARE	STEAM SNUFFING AND/OR SLOWDOWN CONTROL	HYDRANTS	LEAN OIL PUMPS
Service Building	See Chart								50	100	0		Process Area Loading Rack Heaters & Main Gas Lines Minimum 250' between stations. Both Stations should be located at least 250' & not over 500' from compressor house.		50	Height over 75' 200' from plant		50 to 100	–
Gas Compressor House	100	–							250 to 500	200	100	50			50		50	50 to 100	50
Large Process Oil Pump House	100	50	–						250 to 500	200	100			50	50		50	50 to 100	–
Distillation and Fractionation	100	50*)1	30	–					250 to 500	200	100			50	50		50	50 to 100	50
Utilities	50	100	100	100	–				250 to 500	0	0				50			50 to 100	100
Pressure Tanks	150	200	200	200	150	–*)2			100	250	100			50	100			50 to 100	200
Atmospheric Tanks	100	200	200	200	100	50	Two dia for largest		100	250	100			50	100			50 to 100	200
Loading Rack	100	200	200	200	100	100	100	50 to 100	100	150	100	100		50	100			50 to 100	200
Fired Heaters	100	100	100	100	50	150	100	100		150	–				50		50	50 to 100	100
Cooling Towers	50 to 100*)3	50 to 100*)3	50 to 100*)3	100	100	250	200	200	100		100			50 to 100	50 to 100	75' 300' from plant		50 to 100	50 to 100
Skid Unit Package For Plant	100	50	50	40	100	100	100	200	250 to 500	150	100			50	100				50
Control Houses	50	100	100	50*)4	50	200	200	200	250 to 500	50	100			50	50			50 to 100	100

Service building include : offices, laboratories, change houses, gate houses, shop, maintenance, garages,cafetarias, & hospitals
Utilities include : power houses, and water treating
*) Control houses serving unusually large or hazardous units and central control houses for multiple units or housing computer equipment, require greater spacing and may require blast resistant construction.
*)1 Where equipment is housed because of cold climate : a standard fire wall should separate compressor & process equipment
*)2 Maximum of 300.000 gallons per group : 100' between groups, or other suitable arrangements
*)3 50' for handling non flammables, 100' for handling flammables Fire water system, with locations of hydrants and valves, require specials considerations
*)4 More spacing may be required in un attended plants or in high-valued attended plants with complex control system

Figure 9.3 General recommendations for spacing in gas plants.

uncommon to use paper cutouts and shift them until all requirements have been met. Today, CAD is used.

The following factors should be considered when planning the piping system:

- Toxic emissions must not be released where prevailing winds can carry them into an operating area.
- Liquid releases must be confined to appropriate vessels or drains. When a liquid relief valve opens, the liquid should be routed back to a source tank, a sump tank, or disposal tank.
- Safety release of heavier-than-air and toxic gases must be conducted to a safe area for burning. This requires a closed venting or flare system.
- Lighter-than-air sweet gases may be released to the atmosphere through a safety relief valve.
- Heavier-than-air combustible gas safety release must be located where prevailing winds will move the vapors away from sources of ignition if a continuously burning flare is not maintained.
- The vapors from atmosphere storage are generally heavier-than-air and will tend to flow along the ground. Experience indicates that these vapors flow to ground-level and spread like water. Ignition sources must be a minimum of 150 ft. (50 m) from the point of release, thus allowing sufficient dispersion to avoid ignition.
- The location of electric generators is important to a piping layout because of their utility requirements. They should also be as close to the areas of maximum power requirements as practical to minimize losses and voltage drop at starting loads.

MINIMUM DISTANCE IN FEET	SERVICE BUILDING	PROCESS UNITS	BOILER : UTILITIES & ELEC. GEN. EQUIP. ETC	FIRED PROCESS HEATERS	PROCESS VESSELS : FRACT. EQUIP ETC.	GAS COMPRESSOR HOUSES	LARGE OIL PUMP HOUSES	CONTROL HOUSES	COOLING TOWERS	CONTROLS FOR DROPOUT STEAM SNUFF & SPRAY	BLOWDOWN DRUM & FLARE STACK	PRODUCT STAGE TANKS	RUNDOWN TANKS	BLENDING TANKS	HAZARDOUS LOADING & UNLOADING FACILITIES INCL. DOCK	FIRE PUMP	TURRET NOZZLES	FIRE HYDRANTS	FIRE EQUIP. HOUSES
Service Building	See bld Chart																50	50 to 250	50 to 100
Process Units	100	50 to 100															50 to 100	50 to 250	100
Boilers Utility & Elec Generating, Equipment etc.	100	100	–														50 to 100	50 to 250	100
Fired Process heaters*) 2	100*)2	50*)2	100*)2	25*)2													50 to 100	50 to 250	100
Process Vessel, Fractionating Equipment etc.	100	–	100	50*)2	–												50 to 100	50 to 250	100
Gas Compressor Houses	100	–	100	100*)2	30	See bld Chart											50	50 to 250	100
Large Oil Pump Houses	100	–	100	100*)2	20	30	See bld Chart										50	50 to 250	100
Control Houses		–	100	50	50	50	30	See bld Chart									50	50 to 250	100
Cooling Towers	50 to 100	100	100	100	100	50 to 100	50 to 100	50 to 100	25*)6 to 50								50 to 100	50 to 250	100 to 200
Dropout Controls,Steam Snuffing & Water Spray Cont.	–	–	–	50	50	50	20	see note *)7	50	–							–	–	–
Blowdown Drums & Flare Stack	200 to 300	200 to 300	200 to 300	200 to 300	200 to 300	200 to 300	200 to 300	200 to 300	200 to 300	200 to 300	–						100	100	250
Product Storage Tanks	200	250	250	250	250	250	250	250	250	250	200 to 300	see note *)4					50 to 100	50 to 100	300
Rundown Tanks	100	200	200	200	200	200	200	200	200	200	200 to 300	see note *)4	see note *)9				50 to 100	50 to 100	300
Blending Tanks	200	200	200	200	200	200	200	200	200	200	200 to 300	see note *)4	see note *)9	see note *)9			50 to 100	50 to 100	250
Hazardous loading & Unloading facilities Including docks	200	200	200	200	200	200	200	200	200	200	200 to 300	250	250	250	50 to 250		50 to 100	50 to 100	250
Fire Pump	50 to 100	250	0	250	250	100	100	–	–	–	300	300	300	300	300	–	–	–	–

*) Control houses serving unusually large or hazardous units and central control houses for multiple units or housing computer equipment, require greated spacing and may require blast resistant construction

*)1 Special consideration should be given to the installation of fire hydrants and turret nozzles

*)2 Small open flame devices should be located not less than 100' from any vapor hazardous area

*)3 Between battery limits

*)4 Tanks over 10.000 bbls-200' : tanks lees than 5000 bbls-100'

*)5 Tanks with capacities in excess of 5000 bbls - 200' : tanks less than 5000 bbls-100'

*)6 25' to 50' considering area

*)7 Controls may be installed adjacent to or inside, to serve as a shield

*)8 Flare stacks less than 75' in height should be 300' distance : with stacks over 75' in height 200' distance

*)9 Tanks with capacities up to 10.000 bbls should be spaced 1/2 dia. apart : tanks from10.000 bbls to 50.000 bbls capacity, space 1 dia apart. Tanks over 250.000 bbls require special consideration.

*)10 Service building include : offices, change houses, maintenance houses, cafetarias, labs, hospitals, garages, except as specifically provided for as indicated

Figure 9.4 Suggested minimum equipment spacing guidelines for production facilities in onshore oil and gas field locations
(Courtesy of Texas Railroad Commission).

The designer should make every effort to keep the piping arrangements simple and keep the piping short so as to minimize pressure drops and lower pumping costs. The designer should also design piping so that the piping arrangement is flexible, which reduces mechanical and thermal stresses.

To improve appearance and simplify pipe support, piping installed inside buildings is usually laid out parallel to the building steelwork. Piping located outside buildings is usually arranged

- on pipe racks,
- near grade on sleepers,
- in trenches, or

vertically against steelwork or large areas of process equipment.

When laying out the piping, the following guidelines should be adhered to whenever possible:

- Use standard piping accessories whenever possible.
- Do not use miters unless absolutely essential.
- Do not run piping under foundations. However, piping may be run under grade beams.
- When piping must penetrate concrete walls and floors, points of penetrations should be established as early as possible and the person responsible should be informed so as to avoid cutting existing reinforcing bars, electrical conduit, etc.
- Lay piping, such as lines to outside storage or receiving facilities, should always be laid on pipe sleepers if there is no possibility of future roads or site development.
- Avoid pocketing lines by arranging piping so that lines drain back into equipment or into lines that can be drained.
- Gas and vapor branch lines should be taken from the tops of headers where it is necessary to reduce the chance of drawing off condensate or sediment that could potentially damage rotating equipment.
- Lines that are normally buried include lines bringing in water or gas. Where long cold winters freeze the soil, burying lines below the frost line may avoid the freezing of water and solutions, serving the expense of tracking long horizontal parts of the lines.
- Avoid burying steam lines that pocket, due to the difficulty of collecting condensate. Steam lines may be run below-grade in trenches provided with covers or, for short runs, in sleeves.
- Include removable flanged spools to aid in maintenance especially at pumps, turbines, or other equipment that will have to be removed for overhaul.
- Vent all high points and drain all low points on lines. Carefully placed drains and valve vents allow lines to be easily drained or pumped during shutdown periods. This is particularly important in freezing climates and can reduce winterizing costs.

When all of the above requirements have been satisfied, the design of the piping layout can begin.

9.3.3 Piping layout

Equipment should be grouped to allow the logical flow of fluids from one area to another with the least amount of pipe. Construction costs can be minimized by routing piping in common trenches. Care must be exercised to prevent undesired heat exchange between hot piping and cold piping. This requires separation in a lateral direction belowground and vertically on multilevel overhead piping. When uninsulated hot piping is overhead, if possible, it should be on the top rack to prevent undesired convective heating of cold lines. In sensitive services, buried hot lines should be laid in a separate trench from cold lines with a 5 foot (1.5 m) space between adjacent hot and cold lines. Piping should be arranged to require the minimum number of direction changes, as the pressure loss in fittings is high.

9.3.4 Piping interference

9.3.4.1 General considerations

Orderly piping with minimal chance of unplanned pipe intersection is ensured by employing a simple system. This is accomplished by establishing different elevations

for planes of piping and usually consists of four piping planes. The lowest elevation is for electrical conduit, which is all laid in the same plane and generally radiates from motor centers.

9.3.4.2 Electrical conduit

Electrical conduit is normally installed belowground in onshore facilities; for offshore facilities, the conduit or cable is installed in a conduit (cable) tray overhead on pipe racks. Conduit fans out from the generator or MCC to conduct power by the shortest distance possible to the point of use. Conduit is usually buried one foot below the deepest piping and red concrete is poured on top as a warning to individuals that might accidentally excavate to this depth.

9.3.4.3 Process and utility piping

Piping is normally oriented in a plant either "north-south" or "east-west" direction. Piping in one plane is at 90° and those in the other planes are at different elevations. Sufficient space should be allowed between the "north-south" and "east-west" elevations. This configuration allows the largest pipe to make a change of elevation using two long radius ells (Figure 9.5). When the pipe is very large and two long radius ells are impractical, the change can be made using one 90° and one 45° ell. The 90° ell is rolled 45°, and the 45° ell is used to connect to the pipe in the new direction as shown in Figure 9.6. This practice is used for both buried and overhead piping (Figure 9.7).

9.3.4.4 Open drains

Open drains operate at atmospheric pressure and utilize gravity to induce flow. To ensure that the flow will keep the line clean, a minimum pipe slope of 6 in. (15 cm.) per 100 ft. (30 m. of pipe is required. The need to avoid traps that may accumulate solids requires that a change in direction be accomplished by a flat turn.

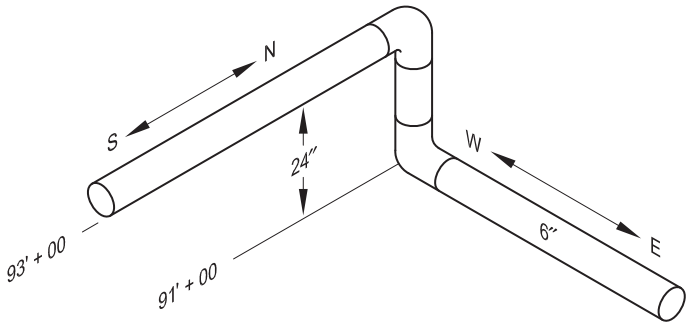

Figure 9.5 Change in pipe elevation for small pipe.

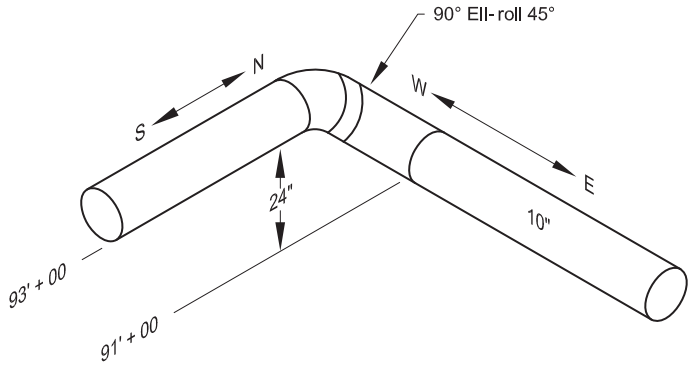

Figure 9.6 Change in pipe elevation for large pipe.

Figure 9.7 Change in elevation for overhead piping.

Funnel drains (Figure 9.8) are located at the highest elevation of all piping planes. Funnel drains serve a restricted area since the lines cannot be very long without the slope introducing pipe interference. The problem is amplified in cold areas where the frost line is deep, because these lines carry water and must be below the frost line. Funnel drains normally terminate in a sump where a submerged pump boosts the liquids from 30 to 50 psig (2-3.5 bars) pressure. The pump discharge is then piped at the process and utility pipe elevations to a sump tank.

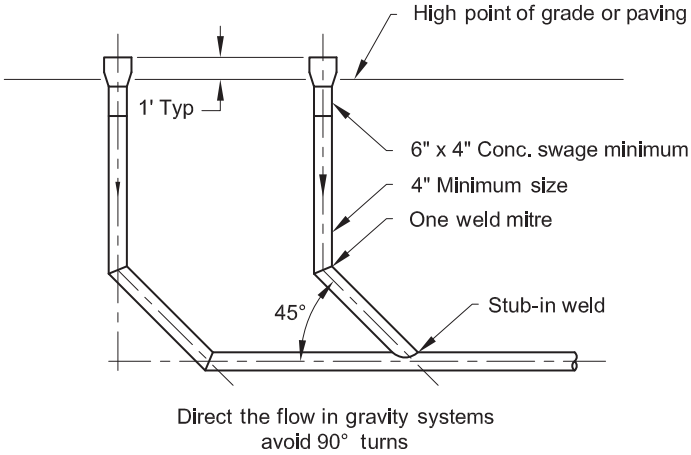

Figure 9.8 Funnel drain installation.

9.3.4.5 Pipe spacing

To avoid difficulties in making future tie-ins, buried pipe should have at least 6 in. space left between pipes. If there is a large difference in the diameter of adjacent pipes, a judgment must be made. For example, one would need to determine the amount of space a welder will need to hot tap and the spacing should be adjusted accordingly. To avoid an excessive width for the supporting bents for overhead pipe (Figure 9.9), spacing should be as close as practical. When numerous pipes must be supported on a single bent, minimum lateral spacing of bare pipe in pipe racks should be as follows:

- 2½ in. between adjacent screwed or welded pipe
- 1 in. between adjacent flanges
- 1½ in. between adjacent flanges and pipe

It is also necessary to consider the vertical clearances required for passage of people and equipment below the pipe racks. The minimum vertical clearances between

Figure 9.9 Overhead piping support bent.

Table 9.1 Minimum vertical clearance between finished grade and the bottom of piping, insulation, or support beam

Location	Minimum clearance
Above main roadways	20 ft.
Within process unit limits above secondary access ways accessible to mobile service equipment	15 ft.
Above elevated walkways and platform	7 ft. 6 in.
On pipe racks (above-grade)	9 ft.
Under any low-level piping in paved or unpaved areas	1 foot

finished grade, or top of floor plate, and the bottom of the piping, insulation, or support beam (whichever controls) are shown in Table 9.1.

The following guidelines should be considered when considering clearances:

- Route piping to obtain adequate clearance for maintenance and equipment removal
- All equipment subject to periodic operation or inspection, for example, relief valves, traps, instruments, and strainers, should be located within reach per the requirements of ASTM F1166.
- Access ways, such as doorways, escape panels, walkways, and lifting wells, should not be obstructed.
- Position equipment with adequate clearance for operation and maintenance. Equipment such as heat exchangers, compressors, and turbines will usually require clearances specified by the respective manufacturer.
- Hot lines should not be run adjacent to lines carrying temperature-sensitive fluids.
- Sufficient headroom should be provided for ductwork, essential electrical runs, and at least two elevations for pipe run north-south and east-west (based on clearance of the largest lines, steelwork, ductwork, etc.).
- Stagger flanges with 12 in. (30 cm) minimum clearances from supporting steel.
- Keep field welds and other joints at least 3 in. (125 mm) from supporting steel, building siding, or other obstruction. Allow room for the joint to be made.
- Allow room for loops and other pipe arrangements by early consultation with personnel responsible for pipe stressing. Notify structural group of any steel required to support such loops.

9.3.4.6 Spacing between decks (floors)

To avoid interferences and to simplify design, recommended vertical height between decks on offshore platforms (floors in buildings) for piping, electrical trays, and air ducts is shown in Figure 9.10.

9.3.4.7 Pipe racks

A “pipeway” is the space allocated for routing several parallel adjacent lines. A “pipe rack” is a structure in the pipeway for carrying pipes and is usually fabricated from steel or concrete and steel, consisting of frames called “bents” on top of which the

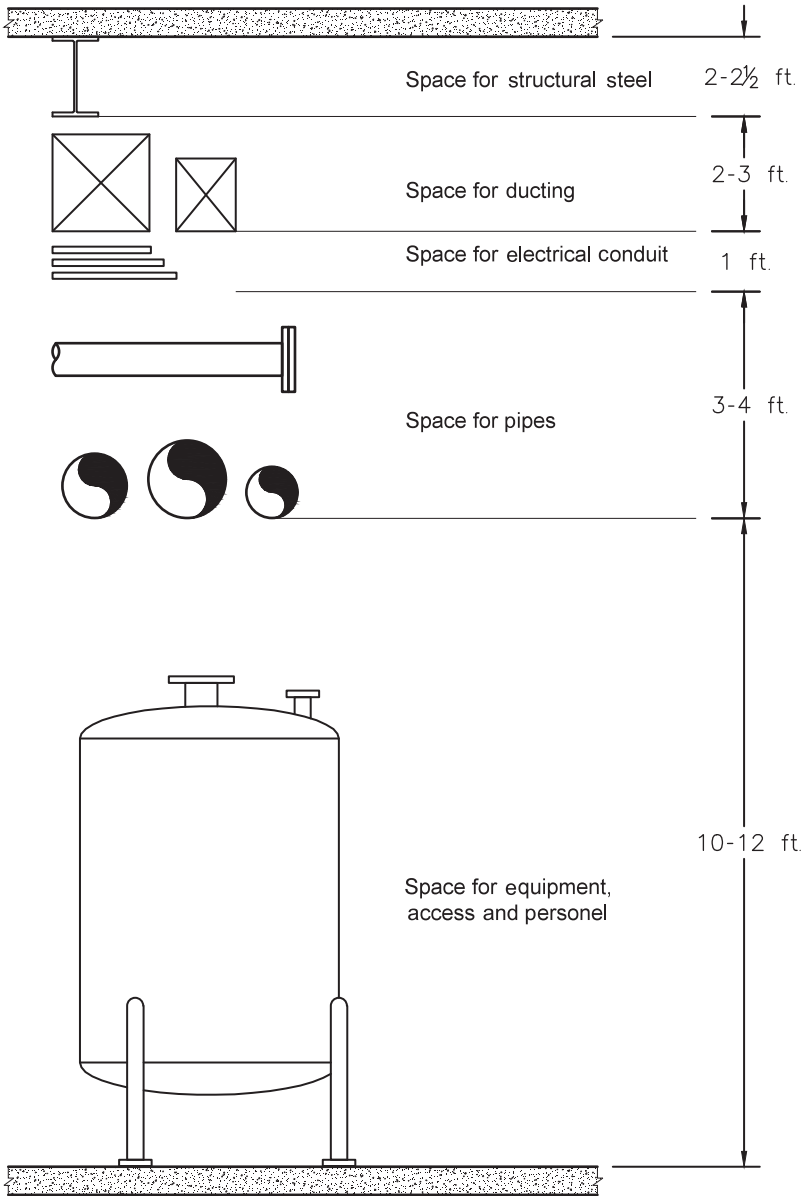

Figure 9.10 Recommended vertical spacing between floor and ceiling.

pipes rest. The vertical members of the bents are termed "stanchions." Figure 9.11 shows two pipe racks using this form of construction, one of which is "double-decked." Pipe racks for only two or three pipes are made from "T"-shaped members, termed "tee-head supports."

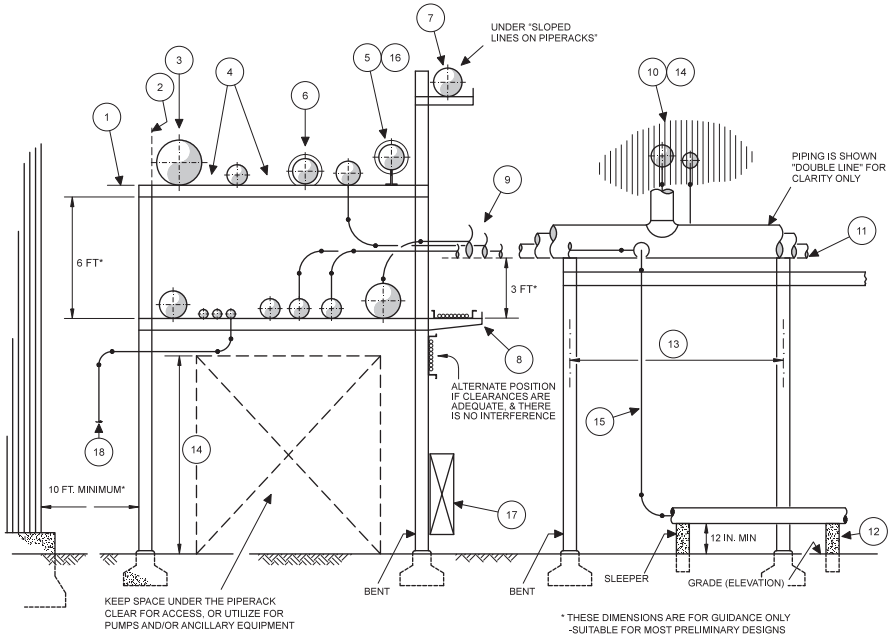

(1) WHEN USING A DOUBLE DECK, IT IS CONVENTIONAL TO PLACE UTILITY AND SERVICE PIPING ON THE UPPER LEVEL OF THE PIPERACK

(2) DO NOT RUN PIPING OVER STANCHIONS AS THIS WILL PREVENT ADDING ANOTHER DECK

(3) PLACE LARGE LIQUID-FILLED PIPES NEAR STANCHIONS TO REDUCE STRESS ON HORIZONTAL MEMBERS OF BENTS. HEAVY LIQUID FILLED PIPES (12 in AND LARGER) ARE MORE ECONOMICALLY RUN AT GRADE-SEE NOTE (12)

(4) PROVIDE DISTRIBUTED SPACE FOR FUTURE PIPES-APPROXIMATELY AN ADDITIONAL 25 PERCENT (THAT IS, 20 PERCENT OF FINAL WIDTH)

(5) HOT PIPES ARE USUALLY INSULATED AND MOUNTED ON SHOES

(6) WARM PIPES MAY HAVE INSULATION LOCALLY REMOVED AT SUPPORTS

(7) THE HEIGHT OF A RELIEF HEADER IS FIXED BY ITS POINT OF ORIGIN AND THE SLOPE REQUIRED TO DRAIN THE LINE TO A TANK, Etc

(8) ELECTRICAL AND INSTRUMENT TRAYS (FOR CONDUIT AND CABLES) ARE BEST PLACED ON OUTRIGGERS OR BRACKETS AS SHOWN, TO PRESENT THE LEAST PROBLEM WITH PIPES LEAVING THE PIPEWAY, ALTERNATELY, TRAYS MAY BE ATTACHED TO THE STANCHIONS

(9) WHEN CHANGE IN DIRECTION OF A HORIZONTAL LINE IS MADE, IT IS BEST ALSO TO MAKE A CHANGE OF ELEVATION (EITHER UP OR DOWN). THIS AVOIDS BLOCKING SPACE FOR FUTURE LINES. 90-DEGREE CHANGES IN DIRECTION OF THE WHOLE PIPEWAY OFFER THE OPPORTUNITY TO CHANGE THE ORDER OF LINES. A SINGLE DECK IS SHOWN AT AN INTER- MEDIATE ELEVATION

(10) SOMETIMES INTERFACES ARE ESTABLISHED TO DEFINE BREAKPOINTS FOR CONTRACTED WORK (WHERE ONE CONTRACTOR'S PIPING HAS TO JOIN WITH ANOTHERS). AN INTERFACE IS AN IMAGINARY PLANE WHICH MAY BE ESTABLISHED FAR ENOUGH FROM A WALL, SIDING, PROCESS UNIT, OR STORAGE UNIT TO ENABLE CONNECTIONS TO BE MADE

(11) PIPES SHOULD BE RACKED ON A SINGLE DECK IF SPACE PERMITS

(12) PIPING SHOULD BE SUPPORTED ON SLEEPERS AT GRADE IF ROADS, WALK-WAYS, Etc., WILL NOT BE REQUIRED OVER THE PIPEWAY AT A LATER DATE. PIPING 'AT GRADE' SHOULD BE 12 INCHES OR MORE ABOVE GRADE

(13) CURRENT PRACTICE IS TO SPACE BENTS 20-25 FEET APART. THIS SPACING IS A COMPROMISE BETWEEN THE ACCEPTABLE DEFLECTIONS OF THE SMALLER PIPES AND THE MOST ECONOMIC BEAM SECTION DESIRED FOR THE PIPERACK. PIPERACKS ARE USUALLY NOT OVER 25 FEET IN WIDTH. IF MORE ROOM IS NEEDED, THE PIPERACK IS DOUBLE- OR TRIPLE- DECKED

(14) MINIMUM CLEARANCE UNDERNEATH THE PIPERACK IS DETERMINED BY AVAILABLE MOBILE LIFTING EQUIPMENT REQUIRING ACCESS UNDER THE PIPERACK. VERTICAL CLEARANCES SHOULD BE AS SET OUT IN TABLE 6.1. BUT CANNOT NECESSARILY BE ADHERED TO AS ELEVATIONS OF PIPES AT INTERFACES ARE SOMETIMES FIXED BY PLANT SUBCONTRACTORS. IF THIS SITUATION ARISES, THE PIPING GROUP SHOULD ESTABLISH MAXIMUM AND MINIMUM ELEVATIONS WHICH THE PIPING SUBCONTRACTORS MUST WORK TO THIS HELPS TO AVOID PROBLEMS AT A LATER DATE. CHECK THE MINIMUM HEIGHT REQUIRED FOR ACCESS WHERE THE PIPERACK RUNS PAST A UNIT OR PLANT ENTRANCE

(15) WHEN SETTING ELEVATIONS FOR THE PIPERACK, TRY TO AVOID POCKETS IN THE PIPING. LINES SHOULD BE ABLE TO DRAIN INTO EQUIPMENT OR LINES THAT CAN BE DRAINED

(16) GROUP HOT LINES REQUIRING EXPANSION LOOPS AT ONE SIDE OF THE PIPERACK FOR EASE OF SUPPORT

(17) LOCATE UTILITY STATIONS, CONTROL (VALVE) STATIONS, AND FIREHOSE POINTS ADJACENT TO STANCHIONS FOR SUPPORTING

(18) LEAVE SPACE FOR DOWNCOMERS TO PUMPS, Etc., BETWEEN PIPERACK ANDADJACENT BUILDING OR STRUCTURE

Figure 9.11 Guidelines for pipe racks.

Pipe racks are necessary for arranging the main process lines and utility lines around the facility. Pumps, manifolds, fire-fighting stations, etc. can be located under the pipe rack. Lighting and other fixtures can be fitted stanchions. Air-cooled heat exchangers can be supported above the pipe rack. The smallest size of pipe run on a pipe rack without additional support is usually 2 in. (5 cm). It may be more economic to change proposed small lines to 2 in. (5 cm) pipe or to suspend them from 4 in. (10 cm) or larger lines, instead of providing additional support.

Typical guidelines for pipe racks include the following:

- Use line spacing charts to make sure all lines can be maintained within the rack.
- Determine pipe-rack elevations, normally the bottom level of the rack is 15 ft. (500 mm) above the grade, depending on mobile equipment used to access pumps and equipment located under the rack.
- Flat turns for branch piping are not permitted. If the rack runs north-south, then all east-west branch pipe running to and from equipment, such as pressure vessels, tanks, rotating equipment, etc. must run, usually, 3 ft. (1 m), above or below.
- Allow space for cable trays and instrument pipe.
- Check with adjacent areas to determine if they have any lines that run along a section of pipe rack.
- Allocate sections on rack for certain pipe, for example, steam and other hot pipes, that may require loops to be located on one side of the rack.
- Group utility pipe.
- Group process pipe.
- Process and relief piping should be placed next to the large-diameter piping and utility piping and positioned in the center of the rack.
- Cooling water piping should be located to one side of the rack, that side being where there are more branches to and from the equipment.
- Locate piping with orifice taps to outside of rack for maintenance/accessibility.
- Large-diameter piping should be located on the outside of the rack to reduce the bending moment on the beam. Check if future pipe-rack expansion is planned before using flat turns.
- If flanges are located in the pipe, one must make sure that any flanges on adjacent piping are staggered to minimize spacing.
- All insulated pipe should sit on shoes.
- Small pipe that may not span the distance between bents (columns) may be supported from larger-diameter pipe if acceptable to client.
- Loading at anchors on the pipe rack must be given to structural engineers so they can design the steelwork accordingly.
- In a multilevel rack, steam and condensate piping are on the top level along with other utility piping except cooling water, which is on the first level close to the equipment they serve. The preferred location of the electrical cable tray is on the top level with the alternate being outside the first level.

9.4 Pipe supports

9.4.1 General considerations

Pipe is supported from hangers or by resting on supports. When pipe is routed indoors, the pipe should be run close to structural steel so that the pipe can be attached to the steel. When pipe is routed outdoors, it is usually routed in groups and is supported on a pipe rack. If the pipe is routed individually, there are a number of standard support designs that are commonly used. Typically, pipe supports are designed and fabricated by the piping design engineer or may be available from a pipe support supplier such as Anvil, Tube Turn, and Ladish. The design of pipe supports are covered in the various piping codes.

Some general pipe support guidelines are as follows:

- Where possible, pipe should run in groups for easier support. Piping that is run in horizontal groups should have a common "bottom of pipe" (BOP) elevation. Piping that is run in horizontal groups should be at a common coordinate so the pipe can sit on a steel support.
- All pipes above (90 °C) are subject to expansion that may damage piping and equipment. The designer is advised to consult a stress analyst.
- Base ells are a common method used to support piping at pumps.
- The designer should make every effort to eliminate piping loads being transferred to equipment nozzles.
- Consideration must be given to the expansion of hot lines and equipment. This also applies to cryogenic (cold) piping where the operating line temperature is less than ambient conditions.
- Insulated lines sit on pipe shoes 4 in. (10 cm) high.
- Pipe should be routed so that it runs close to steelwork or other supporting structures.
- Keep the support as simple as possible.
- The placement of pipe supports (pipe spans) is governed by charts that have been developed for the specific project.
- The use of anchors and guides must be decided by the designers responsible for designing pipe supports in conjunction with the stress analyst.
- Dummy legs may be used to support piping at horizontal elbows.

A selection of typical pipe support is shown in Figures 9.12 and 9.13.

9.4.2 Pipe support spacing

Table 9.2 provides suggested pipe support spacing.

9.4.3 Aboveground piping in facility areas

The piping rests on structural bents that support pipe sizes from 2 to 24 in. (2.5-60 cm) and larger. Supports are spaced 10-20 ft. (3-6 m) apart (avoid undesirable deflections in smaller pipe). This restricts weight stress from 5% to 10% of the total allowable stress for the pipe (this is only significant when thermal stress equals or approximates the allowable stress).

9.4.4 Aboveground piping outside facility areas

The number of supports may be reduced as required by the size of line(s) installed.

9.4.5 Width and bent spacing

The width of the pipe rack will depend on the number of pipes to be supported plus electrical/instrument cable trays plus space for future lines. When laying out the rack, one must determine the spacing between pipes and the span or the distance between supports. When selecting minimum spacing between parallel pipes, one must take into account any insulation to be added and consider if the pipe will be subject to any lateral movement caused by expansion of the branches. When determining the geometry of the pipe rack, the designer has two choices: (1) increase the width of the rack or

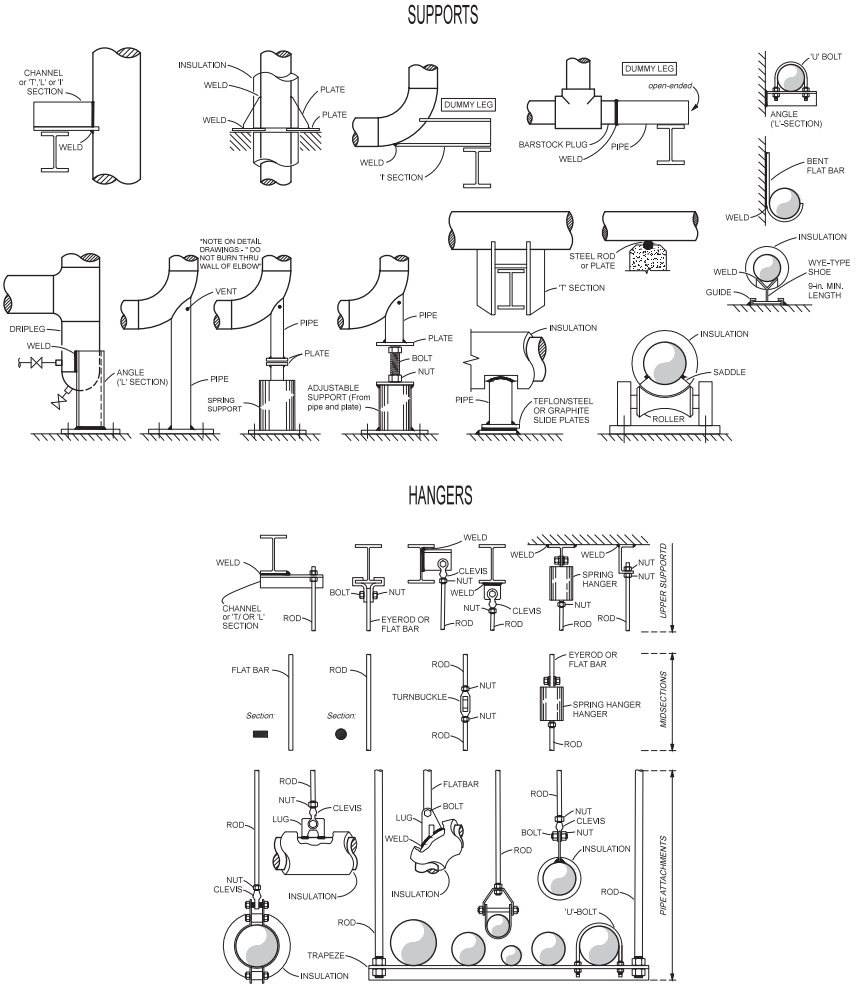

Figure 9.12 Typical pipe supports.

(2) add another level. The cost of additional and heavier steel for another level versus additional space required to widen the rack must be considered. The width of the rack is normally limited to 15 ft. (5 m) to reduce bending moments and save on the steel. The column spacing between bents is usually between 16 and 20 ft. (4.5 and 6 m); it is not unusual to support small lines from larger lines to permit wider spacing between bents. Major factors determining bent spacing include the following:

- Line size—It affects pipe spans.
- Line temperature—Hot lines require a shorter span.
- Insulation—Small-diameter insulated lines that are cold insulated must be supported at short spans.
- Equipment—Normally, two (2) pumps are located in parallel under the pipe rack. It may be necessary to increase the spacing between yard bents to accommodate the pumps.

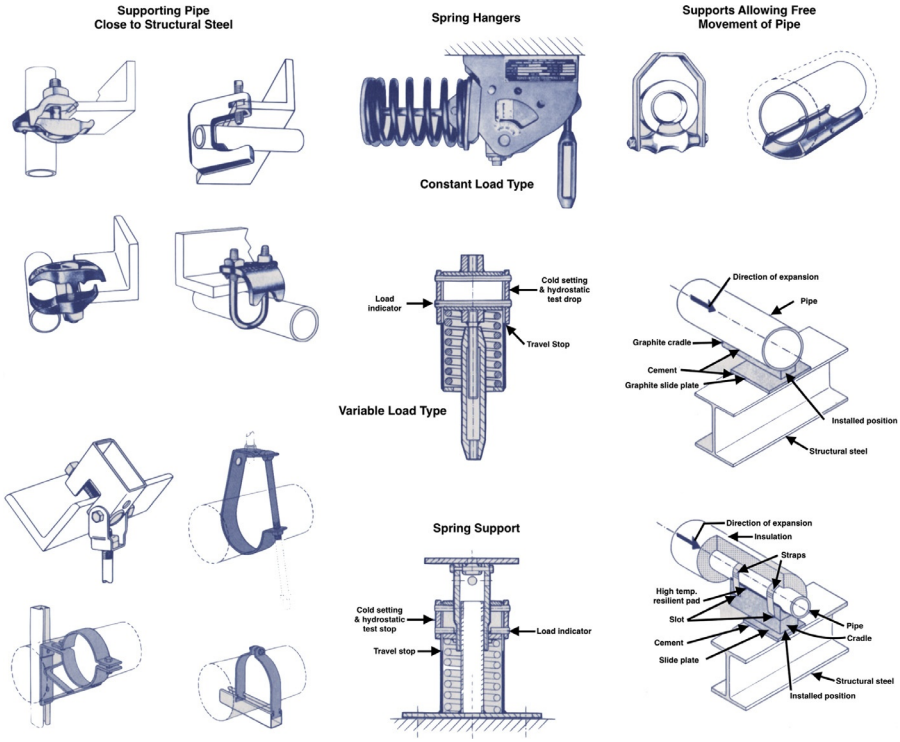

Figure 9.13 Typical pipe supports.

Table 9.2 Suggested pipe support spacing

Nominal pipe size (NPS)	Suggested maximum span			
	Water Service		Steam, gas, or air service	
	ft.	m	ft.	m
1	7	2.1	9	2.7
2	10	3.0	13	4.0
3	12	3.7	15	4.6
4	14	4.3	17	5.2
6	17	5.2	21	6.4
8	19	5.8	24	7.3
12	23	7.0	30	9.1
16	27	8.2	35	10.7
20	30	9.1	39	11.9
24	32	9.8	42	12.8

General notes: (a) Suggested maximum spacing between pipe supports for horizontal straight runs of standard and heavier pipe at maximum operating temperature of 750 °F (400°). (b) Does not apply where span calculations are made or where there are concentrated loads between supports, such as flanges, valves, specialties, etc. (c) The spacing is based on a fixed beam support with a bending stress not exceeding 2300 psi (15.86 MPa) and insulated pipe filled with water or the equivalent weight of steel pipe for steam, gas, or air service, and the pitch of the line is such that a sag of 0.1 in. (2.5 mm) between supports is permissible.
(Courtesy of ASME B31.1 Code)

9.4.6 Relief headers

Relief headers are normally located on one side of the pipe rack on a tee post in order to attain a good slope for drainage. It is important that relief, blowdown, and flare lines be self-draining from all valve outlets to the knockout drum, to the flare stack, or to a point at the facility limit. To achieve this, lines should connect into the top of the header and at 45 degrees in the direction of flow. To eliminate pockets and to obtain the required slope to knock out drum, relief headers must be placed above the main pipe rack.

9.4.7 Instrument and cable trays

Instrument and cable trays are typically supported on the pipe rack. The designer must allocate space from the beginning of design. Since there is a possibility of induced current interference between instrument and communication cable trays, they must be located away from electrical and power cable trays. One should consult with the instrument/electrical engineers for specific requirements.

9.5 Anchor blocks

9.5.1 General considerations

Anchor blocks, clamps, and piping supports are necessary to establish control over the movement of pipe. Pipe moves because of earth movement, thermal expansion, or induced vibration. The stress caused by movement can be relatively high and, when added to pressure stress, may result in failure.

9.5.2 Thermal expansion

Thermal expansion could result in field lines placing a high stress on plant and facility piping. Figure 9.14 shows a single-line underground anchor. The anchor is usually placed at or near the fence line before entering a plant. In plant, aboveground anchors can be established by either four-bolt tight clamps or welding shoes attached to the pipe and to the supporting beam (Figures 9.15 and 9.16).

Anchors on in-plant piping are installed to control the direction of growth when pipe is subject to thermal expansion. This confines the thermal expansion to a location where the pipe has been specifically designed to withstand the additional stress. Other types of underground anchors, thrust blocks (Figure 9.17), are used to limit the pipe growth or movement in an undesirable direction.

9.5.3 Earth movement

The expansion and contraction of the soil caused by the alternate wetting and drying allow pipe to settle. Without a concrete pad to distribute the load over a large area, the weight of the pipe would eventually be supported by a vessel or machine nozzle.

All risers to vessel or machine nozzles and risers to ground support control valves should have a concrete pad to relieve the nozzles of pipe stress (Figure 9.18).

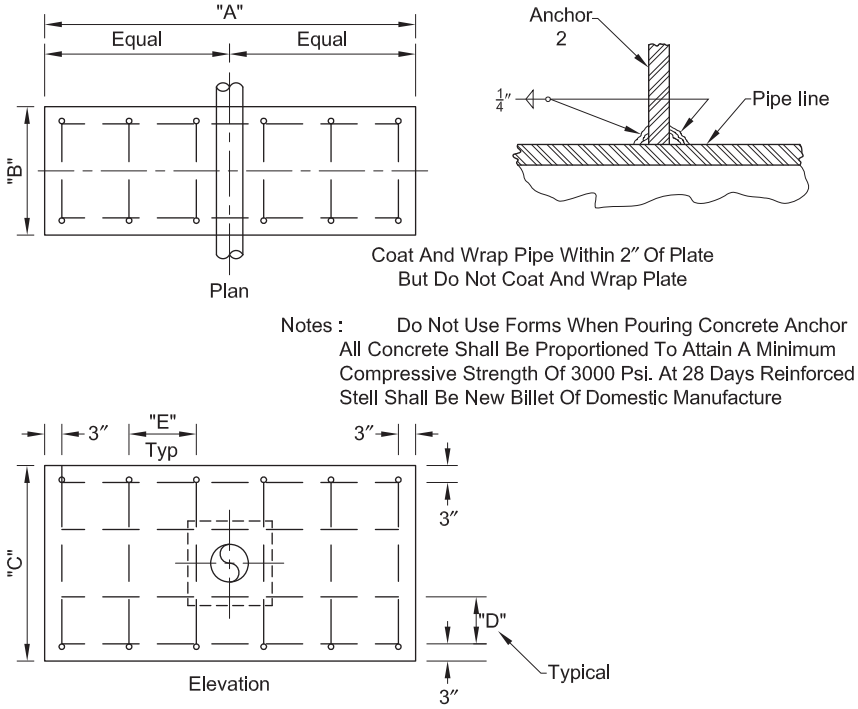

Figure 9.14 Pipe anchor for Grade B pipe through 12 in. OD.

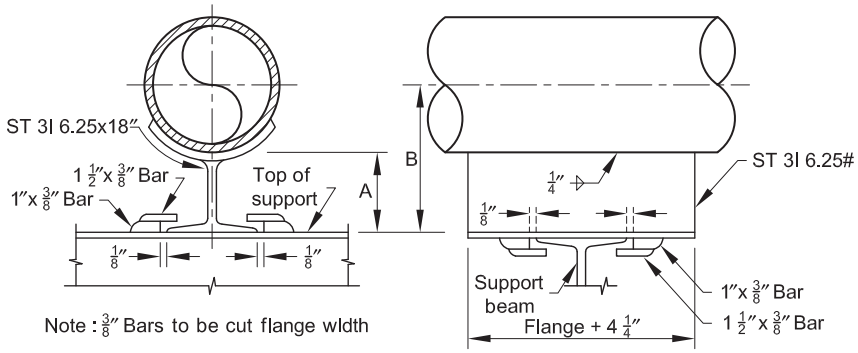

Figure 9.15 Typical sliding guide and anchor details for overhead pipe 2-8 in.

9.5.4 Induced vibration

Supports and braces are necessary to prevent mechanically induced vibration from coupling with a mechanically resonant pipe length. If this occurs, the pipe motion can be severe and result in failure. Mechanically induced vibration is covered in more detail in a later section of this chapter.

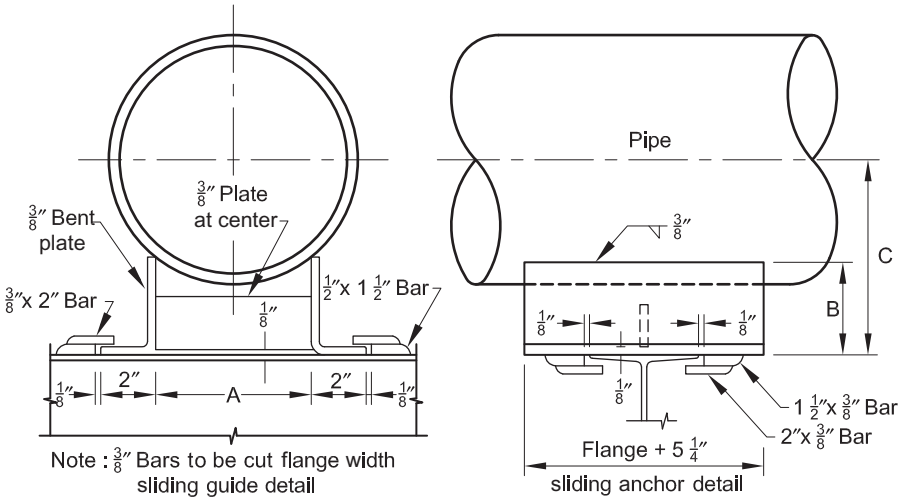

Figure 9.16 Typical sliding guide and anchor details for overhead pipe 10-24 in.

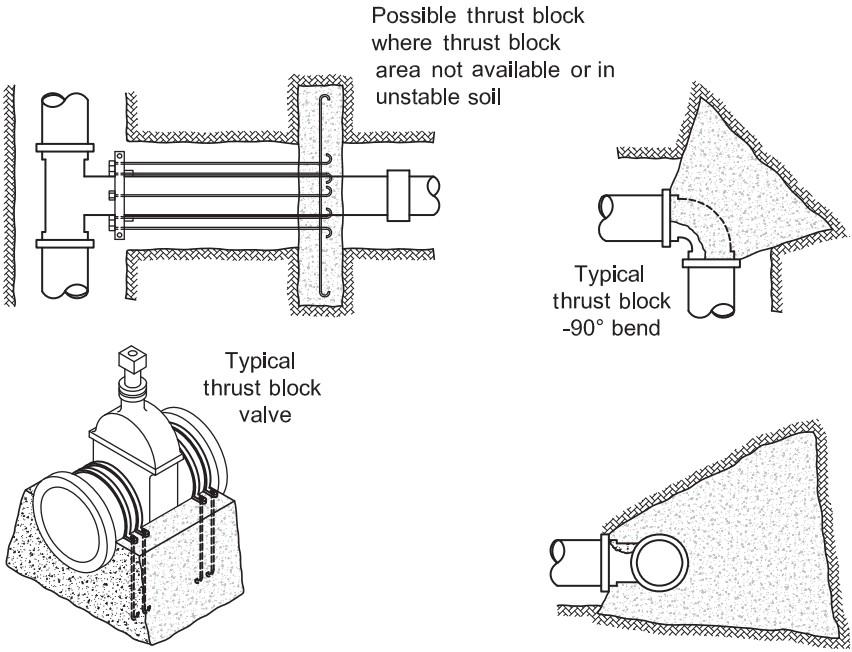

Figure 9.17 Thrust block anchors.

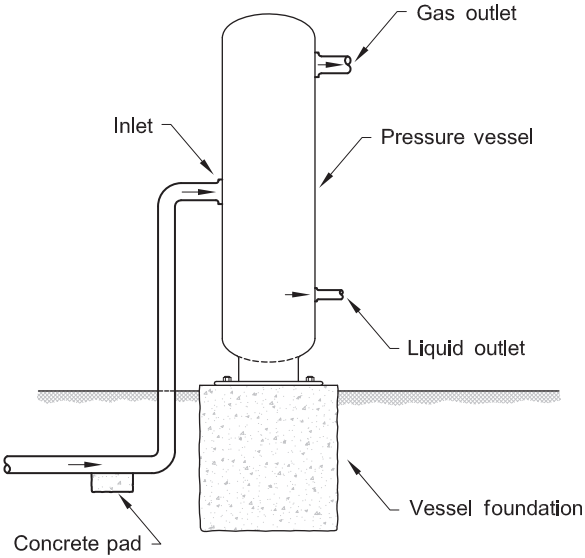

Figure 9.18 Riser support.

9.6 Manifolds

9.6.1 General considerations

Manifolds are used to combine individual production lines into a single process flow or to divide a single flow into several streams.

Typically, the velocities in manifold piping are high, and therefore, erosional flow can be a problem. For this reason, target tees are usually installed, and headers may be looped to reduce velocities. Each inlet source should have a check valve installed, and the manifold should be pressure rated for the shut-in pressure of the source. Also, the inlet sources should be spaced far enough apart to allow the valves to be actuated without interference. For 2-4 in. (51-102 mm) lines, the spacing should be 1½-2 in. (38-51 mm) center-to-center. To minimize the length of the manifold, it is possible to arrange headers in a vertical plane and enter from both sides on a staggered pattern.

Any branch connections to the manifold should follow the operating company's pipe, valve, and fitting specification. Often, a header diameter of at least twice the nominal diameter of the input lines is chosen because the operating company's piping specifications will not allow Weldolets to be installed where the inlet is more than half the diameter of the header. If there are any plans for future expansions, Weldolets, flanges, and blind flanges can be preinstalled on the header.

The more common type of valves used for manifolds are ball or plug valves since they minimize the interference between slots. Flanged connections are the most common. Clamp-type connections also can be used, but they may be more susceptible to leaks due to misalignment and tend to be more costly. Flanged connections require all valves to be unbolted from the inlet to make sufficient room to remove one valve.

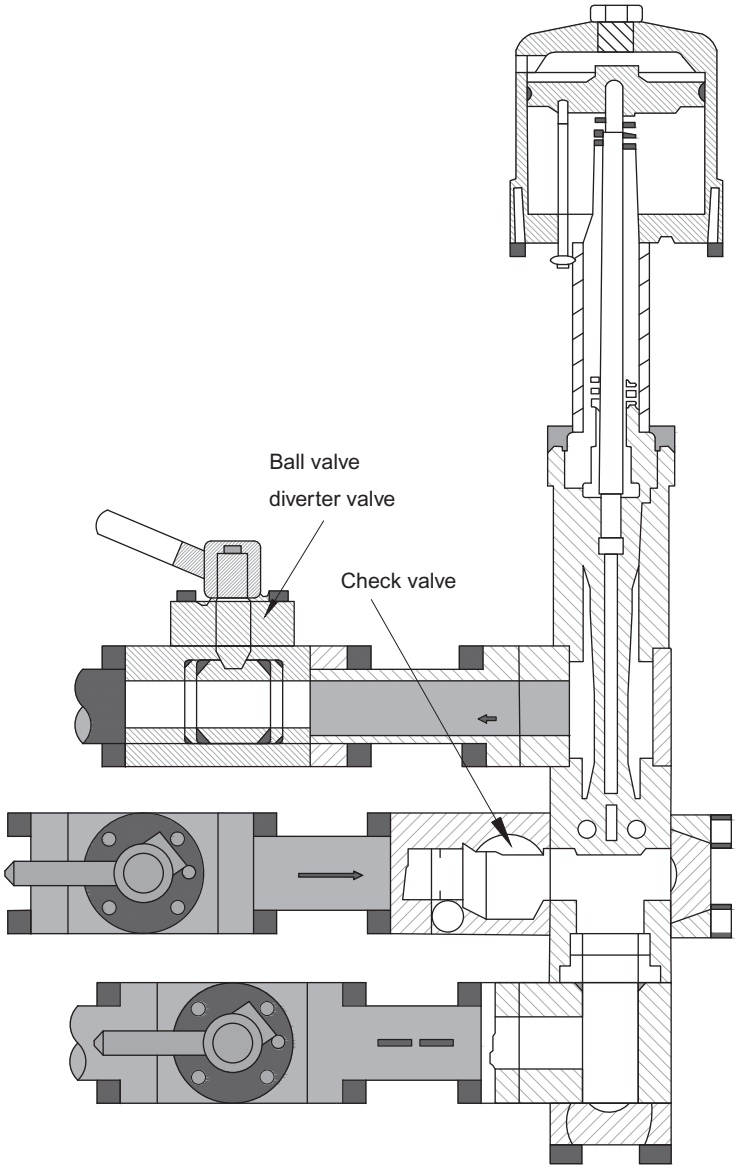

Figure 9.19 Sectional view of a manifold valve (Courtesy of National Supply Company).

Specialty designed valves and connections may minimize the space required and reduce costs. Figure 9.19 shows one such valve arrangement. Flow enters the inlet, which contains a block valve and a check valve, and is directed either up to a test header or down to one or more group headers. A divert valve with an actuator can be used as shown in the figure for automated well test (AWT). Such valve

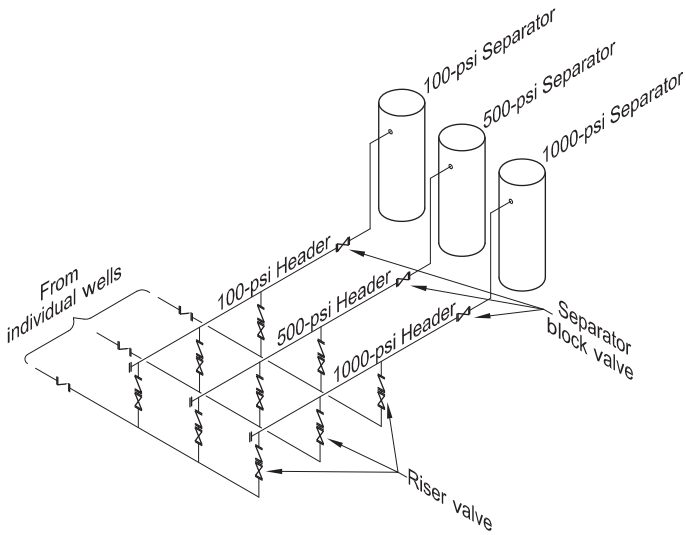

Figure 9.20 Typical gas well manifold arrangement.

arrangements have the drawback of having nonstandard dimensions, requiring the use of a single supplier for parts.

Headers should be equipped with a blind flange on the end for future additions and for cleanout, and taps should be provided for pressure gauges. If the header is for an offshore platform, a drip pan is required. To reduce costs, it may be wise to consider a shop-fabricated skidded unit.

9.6.2 Gas well manifolds

Gas well manifolds consist of the assembly downstream of the individual well meters (Figure 9.20). Gas well flow must be continuously metered, and the flowline is brought aboveground for the meter installation. Flow is then downward through the connecting risers and into a buried header where it combines with production from other wells. By opening the proper valve, the operator can place each well in either the blowdown header, test separator header, low-pressure header, or high-pressure header.

9.6.3 Oil well manifolds

Continuous metering is not required so the flowlines are left underground and flow passes through the connecting risers into the appropriate aboveground header (Figure 9.21).

All headers and piping are designed to withstand the highest pressure applied to any segment of the manifold, and piping including last block valve upstream of the system relief valve must withstand the maximum possible pressure of the upstream piping segment.

Pressure design for manifolds is the same as for piping. Quarter-turn valves (plug or ball) are used as they are quick opening. They are usually preferred, although gate or

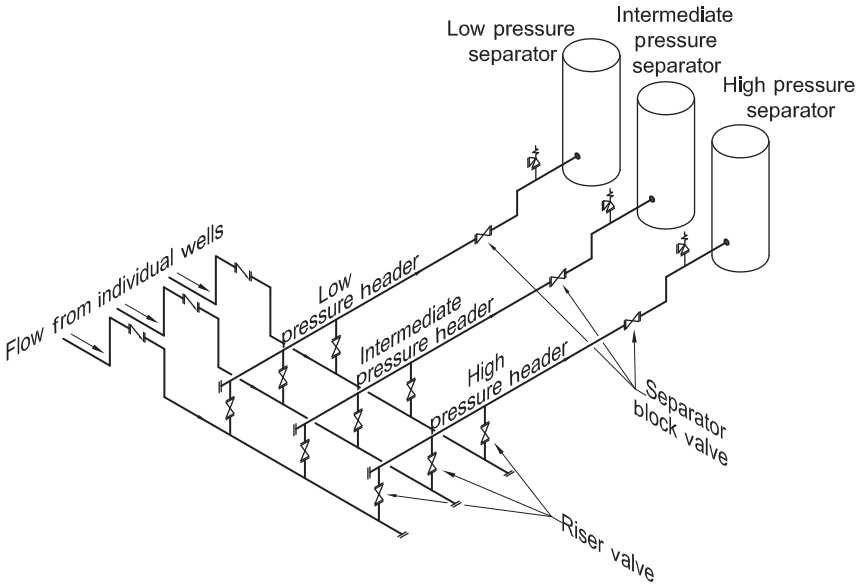

Figure 9.21 Typical oil well manifold arrangement.

globe valves may be necessary at very high pressures and temperatures as quarter-turn valves may not be available to withstand these conditions.

9.6.4 Distribution manifolds

9.6.4.1 General considerations

Distribution manifolds are used to introduce fluids into multiparallel heaters and heat exchangers, deliver liquids to parallel pumps, and distribute gas flow to several compressors. To a large degree, the piping configuration may determine whether the equipment functions properly.

9.6.4.2 Heaters

Heaters require a more even distribution of flow between heaters or passes. Thus, the manifold must be constructed so as to provide equal inertial forces to each manifold outlet. As shown in Figure 9.22, equal distribution can be provided on two and four manifold outlets. For larger numbers of outlets, flow control valves are required. A poor distribution of fluids to parallel heater passes can result in hot spots in a starved pass. This causes coking and an increased flow resistance that further aggravates the flow distribution.

9.6.4.3 Compressors

Piping should prevent liquid slugging into the compressor cylinders. Suction headers must be equipped with drain valves and a sump (if the gas is unusually rich (wet)). To minimize the liquids in the suction line, the connection to the header may be from the

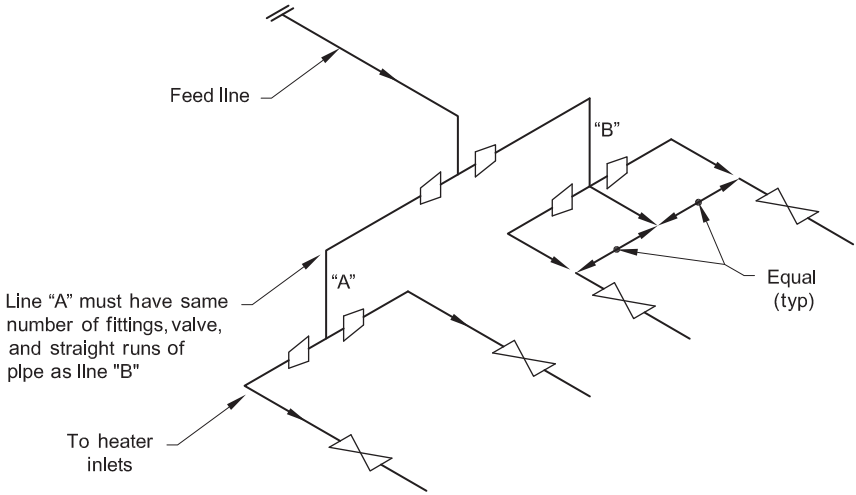

Figure 9.22 Symmetrical heater distribution manifold.

top or bottom of the header, preferably at a 45° angle from vertical (Figures 9.23 and 9.24). As shown in Figure 9.24, the suction line protrudes inside the header to prevent liquid from entering the suction line.

To avoid distribution problems as additions are made, the header should be capable of handling the full anticipated flow at the pressure drop limitation prescribed for the operating pressure. The header should be terminated in a flange to provide for future expansion (Figure 9.25). The header should terminate as near the last lead line as possible to avoid long dead-end segments where water can accumulate, stagnate, and nurture bacteria, which accelerates corrosion.

Piping and support of the discharge header should allow for thermal expansion. For example, carbon steel expansion is in an order of magnitude of 0.85 in. per 100 °F per 100 ft. Since most suction lines are 25-50 ft. long, careful control of piping configuration and clamping will eliminate the need for expansion joints.

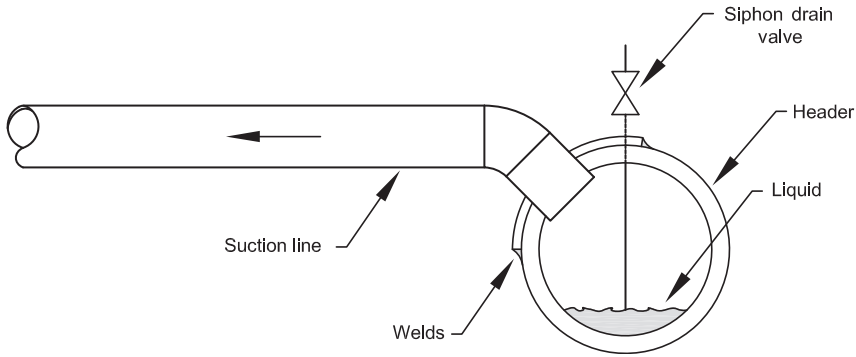

Figure 9.23 Belowground compressor header and aboveground suction piping.

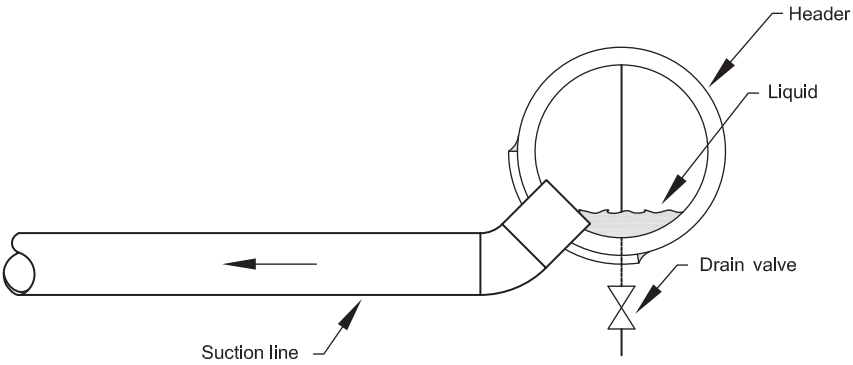

Figure 9.24 Aboveground compressor header and suction line piping.

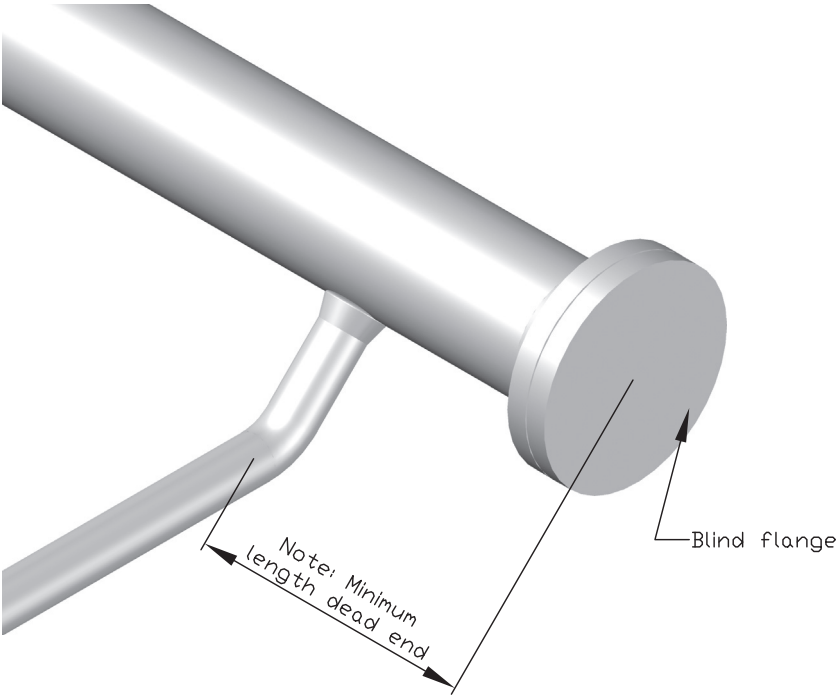

Figure 9.25 Typical header end.

To minimize liquid carryover from liquids, it is good practice to reduce flow velocities below that in piping. This can be accomplished indirectly by limiting the allowable pressure drop in manifolds to

- 1/4 psi per 100 ft. (30 m) of pipe for manifolds operating above 100 psig (6.7 barg),
- 1/8 psi per 100 ft. (30 m) of pipe for lines operating below 100 psig (6.7 barg).

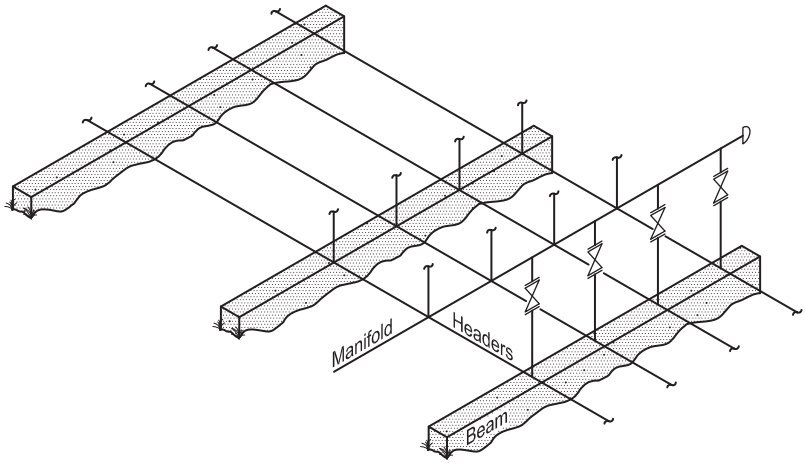

Figure 9.26 Manifold supports.

9.6.4.4 Small manifolds

Small manifolds are normally shop-fabricated for precise alignment control. Numerous welded connections tend to draw the headers out of alignment. A "jig" can be used in a shop to hold alignment. The finished product can be stress-relieved (by baking) in an oven. Transportation problems limit the length of a shop-fabricated manifold and long shop build manifolds must be made in flanged segments.

9.6.4.5 Large manifolds

Large manifolds are normally field-fabricated and require one to pay particular attention to fabrication details. A "jig" is used for alignment control. Prevention of header warping by welding techniques is necessary to assure a net, stress-free field-fabricated installation.

9.6.4.6 Manifold supports

Manifolds must have adequate support from below that avoids undue stress caused by differential settling and provides for ease in extending manifold headers. As shown in Figure 9.26, concrete sleepers or beams are normally used. Without this support, each header will settle to a different level and each tie-in will be mechanically stressed. When this occurs, uniform alignment is lost and requires each pipe segment be tailored to compensate for the misalignment, should an extension be required at a later date. When an extension is made to a sleeper-supported manifold, every segment of pipe required is the same length in like locations and every item can be precut and beveled in the fabrication yard with large savings in field labor costs.

9.7 Foundation integrity

Foundation calculations are made using the undisturbed soil strength to determine the surface area required to support the piping. For this reason, *never* dig below the bottom

elevation of a foundation when installing pipe adjacent to vessels and machines. To do so would disturb the soil and may result in the vessel leaning toward the area of disturbed soil.

9.8 Facility piping details

9.8.1 Piping insulation

Pipe insulation is often required in piping systems, which are either much cooler or much hotter than ambient temperature. Insulation is necessary for personnel protection, to conserve energy or to guard against ignition. For temperatures above approximately 150 °F (65 °C), most operators provide insulation for personnel protection. If the temperature exceeds 400 °F (200 °C), insulation is usually provided for protection against hydrocarbon spillage. If the temperature exceeds 900 °F (480 °C), insulation is usually provided to protect against contact with combustible gas. Insulation is also used to

- retain heat in a pipe or vessel so as to maintain process temperature or prevent freezing,
- minimize transfer of heat from the surroundings into the line or vessel,
- safeguard personnel from hot lines.

The choice of insulation is normally included with the piping specification. Installed insulation normally consists of the following three parts:

- The thermal insulating material
- The protective covering for it
- The metal banding to fasten the covering

Most insulating materials are supplied in "formed" pieces for elbows, tee's, branches, etc. Formed coverings are also available. In addition, it is customary to paint the installed insulation and to weatherproof it before painting, if used externally.

Some commonly used insulating materials include the following:

- Asbestos (1200 °F) (650 °C)
- Calcium silicate (1200 °F) (650 °C)
- Cellular glass (800 °F) (427 °C)
- Cellular silica (1600 °F) (871 °C)
- Diatomaceous silica plus asbestos (1600 °F) (871 °C)
- Mineral fiber (250-1200°F) (121-650 °C) depending on type
- Mineral wool (1200 °F) (650 °C)
- Magnesia (600 °F) (315 °C)
- Polyurethane foam (250 °F) (121 °C)

Certain foamed plastics have a very low conductivity and are suitable for insulating lines as cold as −400 ° F (204 °C). Rock cork (bonded mineral fiber) is satisfactory down to −250 °F (−157 °C), and mineral wool down to −150 °F (−101 °C).

Some insulating materials, such as magnesia, should not be used since they can deteriorate or cause corrosion of the insulated surface if it is wet. Certain heating fluids are incompatible with some insulating materials and autoignition may occur. For these reasons, one must exercise caution when selecting materials.

In addition to the insulation, a vapor barrier may be necessary. A vapor barrier should be applied to the outer surface of the insulation on cold piping. The insulation itself should be protected from weather, oil spillage, mechanical wear, or other damage by sheet metal jacketing. Normally, if the pipe temperature is below 250 °F (120 °C), the pipe is primed for corrosion protection. Above this temperature, it is difficult to maintain the primer, and moisture should not be a problem since any water reaching the pipe wall should evaporate.

In the presence of H_2S, flanges should not be insulated. This is to prevent the H_2S from concentrating around the bolts and causing stress corrosion cracking of the bolt materials. When laying out lines, the designer should keep in mind that the extra thickness of insulation and weather barriers will add to the pipe diameters. It also is wise to provide additional projection for pressure taps, thermowells, etc.

Most insulation in a production facility usually will not exceed 2 in. in thickness. A preliminary guide to insulation thicknesses of the more common materials required on pipe up to 8 in. is shown in Tables 9.3 and 9.4.

Table 9.3 Guide to insulation thickness

Application	Typical insulating material	Usual thickness of insulation (in.)
Hot lines (to 500 °F)	Asbestos, silicate, magnesia	1-2
Cold lines (to − 150 °F)	Mineral wool	1-3
Personnel protection	Asbestos, silicate, magnesia	1

Table 9.4 Insulation required for pipe at various temperatures

Nominal pipe size (in.)	Inches thickness of insulation for stated temperature range					
	Temperature range in °F					
	Below 400	400-549	550-699	700-899	900-1049	1050-1200
To 1	1	1	1.5	2	2	2.5
1.5	1	1.5	1.5	2	2	2.5
2	1	1.5	1.5	2	2.5	3
3	1	1.5	1.5	2.5	2.5	3
4	1	1.5	1.5	2.5	2.5	3.5
6	1	1.5	1.5	2.5	3	3.5
8	1.5	1.5	2	2.5	3	3.5
10	1.5	1.5	2	2.5	3	4
12	1.5	2	2	2.5	3	4
14	1.5	2	2	3	3	4
16	2	2	2	3	3.5	4
18	2	2	2	3	3.5	4
20	2	2	2	3	3.5	4
24	2	2	2	3	3.5	4

9.8.2 Jacketing and tracing

9.8.2.1 Jacketing

Jacketing refers to double-walled construction of pipe, valves, vessels, etc. designed so that a hot or cold fluid can circulate in the cavity between the walls. Heating media include water, oils, steam, or propriety high-boiling point fluids that can be circulated at low pressure, such as DOWTHERM, Therminol, and Mobiltherm. Cooling media include water, water mixtures, and various alcohols.

9.8.2.2 Tracing

External tracing consists in running tubing filled with a hot fluid, usually steam, or electric heating cables, in contact with the outer surface of the pipe to be kept warm. The tubing or cables may be run parallel to the pipe or wound spirally around it. The pipe and tracers are encased in thermal insulation. Electric tracing allows close control of temperature and can provide a wider range of temperatures than steam.

9.8.3 Chokes

Fluid flows from a choke in a high-velocity jet. For this reason, it is desirable to have a straight run of pipe of at least 10 to 15 pipe diameters downstream of any choke, so that the jet does not impinge on the side of the pipe.

Often, on high-pressure wells, two chokes are installed in the flowline: one is a positive choke and the other an adjustable choke. The adjustable choke is used to control the flow rate. If it were to erode (cut out), the positive choke would act to restrict the flow out of the well and keep the well from damaging itself. Where there are two chokes, it is good piping practice to separate the chokes by 10 pipe diameters to keep the jet of flow formed by the first choke from cutting out the second choke. In practice, this separation is not often done because of the expense of separating two chokes by a spool of pipe rated for well shut-in pressure. It is much less expensive to bolt the flanges of two chokes together. No data have been collected to provide whether the separation of chokes is justified from maintenance and safety considerations.

Whether a choke is installed, it is good piping practice to install block valves within a reasonable distance upstream and downstream so that the choke bean or disk can be changed without having to bleed down a long length of pipeline. A vent valve for bleeding pressure off the segment of the line containing the choke is also needed. This is particularly true in instances where a positive choke is installed at the wellhead and an adjustable choke is installed hundreds of feet away in a line heater. If block valves are not installed downstream of the positive choke and upstream of the adjustable choke, it would be necessary to bleed the entire flowline to atmosphere to perform maintenance on either choke.

9.8.4 Flange protectors

The full faces of flanges never really touch due to the gaskets or rings that cause the seal. The space between the two flange faces is a very good spot for corrosion to develop,

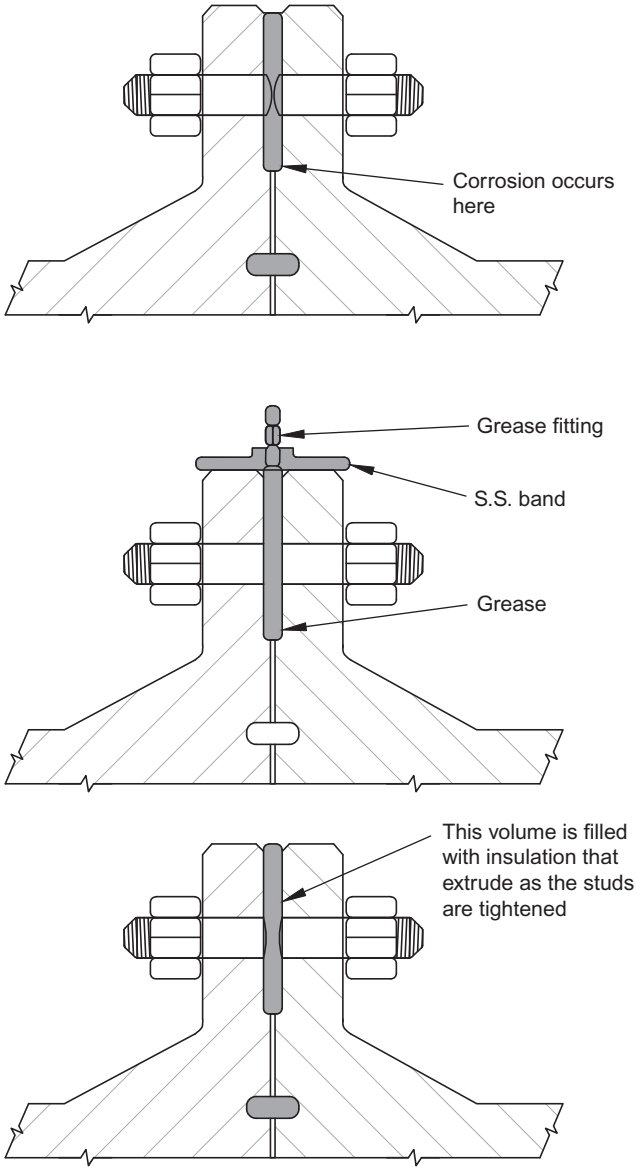

Figure 9.27 Types of flange protectors.

which as shown in flange protectors made of closed-cell soft rubber are sometimes used to exclude liquids from (Figure 9.27) penetrating this area. Stainless-steel bands and grease fittings are also used. Closed-cell flange protectors are much less expensive than stainless-steel bands. However, if not installed properly, they can actually accelerate corrosion if a path is created through the material to allow moisture to enter.

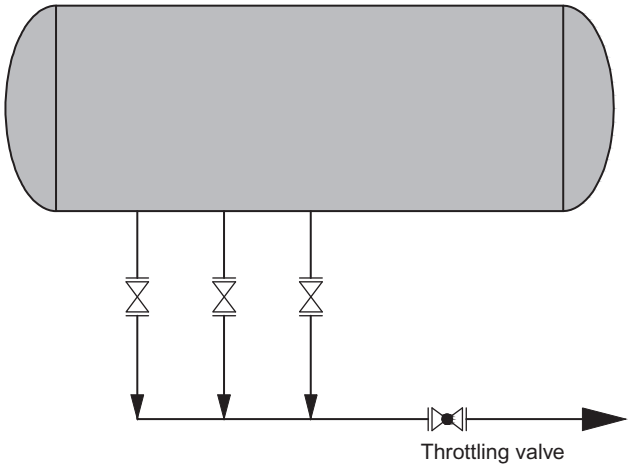

Figure 9.28 Typical drain piping arrangement.

Flange protectors should not be used in H_2S service. They may trap small leaks of sour gas and keep them from being dispersed into the atmosphere. Also, many companies do not use flange protectors on lines containing flammable liquids. Liquids from a leaking flange can accumulate under the protective cover, producing a fire hazard.

9.8.5 Vessel drains

If vessel drain valves are used often, they have a tendency to erode out. As the valve is opened and shut, a solid slurry abruptly flows across the valve and creates an erosive action. Figure 9.28 shows a tandem valve arrangement to minimize this potential problem.

To drain the vessel, the throttling valve is closed and one or more drain valves are opened, with no flow going through them. The throttling valve is then opened. To stop draining, the throttling valve is closed, flow goes to zero, and the drain valves are shut. The throttling valve will eventually cut out, but it can be repaired without having to drain the vessel.

Vessel drain systems can be very dangerous and deserve careful attention. There is a tendency to connect high-pressure vessels with low-pressure vessels through the drain system. If a drain is inadvertently left open, pressure can communicate through the drain system from the high-pressure vessel to the low-pressure vessel. In such a system, the low-pressure vessel relief valve must be sized for this potential gas blowby condition.

The liquid drained from a vessel may flash a considerable quantity of natural gas when it flows into an atmospheric drain header. The gas will exit from the piping system to atmosphere at the nearest possible location. Thus, the sump collecting vessel drains must be vented to a safe location and be designed for gas blowby.

9.8.5.1 Open drains

Open gravity drains should not be combined with pressure vessel drain systems. The gas flashing from vessel liquids may exit an open drain system at any point and create a hazard. On open drain piping leaving buildings, a liquid seal should be installed as further protection to assure that gases flashing from liquids from other locations in the drain system will not vent from the system in the building. The elevation of gravity drain systems must be checked carefully to assure that liquids will flow to the collection point without exiting the piping at an intermediate low point.

9.8.5.2 Piping drains and drain valves

At high points in piping, vent valves must be installed to remove air for hydrotesting and for purging the system. At low points, drain valves must be installed to drain liquids out of the system to perform maintenance. Normally, vent and drain valves are ½ or ¾ in. (12.7 or 19 mm) ball valves.

9.8.6 Control stations

A control station is an arrangement of piping in which a control valve is used to reduce and regulate the pressure or rate of flow of liquid, gas, and steam. Whenever it is necessary to control the process pressure, level, temperature, etc., a control station is installed. A control station may be as simple as a single control valve or it may include several control valves, block valves, bypass valves, check valves, and drain or vent valves.

Control stations should be designed so that the control valve can be isolated and removed for servicing. To facilitate this, the piping of the station should be as flexible as circumstances allow.

Where there is a control valve, block valves are often provided so the control valve can be maintained without having to drain or bleed the pressure from the vessel and downstream piping. Typically, a safety systems analysis also would call for a check valve at this point to prevent backflow. Drain or vent valves should be installed to drain liquid or bleed pressure out of the system so that the control valve can be maintained.

Bypass valves are sometimes installed to allow the control valve to be repaired without shutting in production. On large, important streams, the bypass could be another control valve station. Manual bypass valves are more common in smaller facilities. The bypass valve could be a globe valve if it is anticipated that flow will be throttled through the valve during the bypass operation, or it could be an on/off valve such as a ball, plug, or gate valve, if the flow is to be cycled. Because globe valves do not provide positive shutoff, sometimes, there is a ball or another on/off valve piped in series with the globe bypass valve.

The piping system for any facility, other than the straight pipe connecting the equipment, is made up primarily of a series of control stations. Flow from one vessel goes through a control station and into a piece of pipe that goes to another vessel. In addition to considering the use of block valves, check valves, etc., all control stations should be designed so that the control valve can be removed.

Any bypass valve should be located above or on a level with the main control valve. If the bypass is below the control valve, it provides a dead space for water accumulation and corrosion.

9.8.7 Open-ended valves

Some operators require open-ended valves having a blind flange installed so that inadvertent operation of the valve will not subject personnel to an uncontrolled leak of hydrocarbons. A ½ in. (12.7 mm) valve can be provided to allow any pressure buildup between the valve and the flange to be vented prior to unbolting the flange.

9.8.8 Electrical insulation kits

An electrical insulating kit should be installed in flanges, which isolate piping systems protected by different cathodic systems or separate a protected system from one, which is not protected. Insulating kits include nonconductive gaskets and sleeves for bolts.

9.8.9 Check valves

The velocity of the fluid must be high enough so that the check valve will lift completely out of the flow path. If the velocity is too low, the check valve will chatter. Clattering can damage the seats and the valve may not seal properly. The minimum flow velocity can be calculated from the following equation:

$$V_{\min} = (C/\rho)^{1/2} \tag{9.1}$$

where

$V_{\min}$ = minimum pipe velocity (ft./s (m/s)),
ρ = density of liquid (lb/ft.^{3} (kg/m^3)),
C = check valve constant (Table 9.5).

Table 9.5 Check valves "*C*" constants

Check valve type	Constant, *C*
Swing check	60
Tilting check	30-80
Lift check	
Orifice horizontal	40
Orifice tilted	140
Foot valve	
Poppet disk	15
Hinged disk	35

9.9 Piping vessels and equipment

9.9.1 Introduction

Vessels, heat exchangers, towers, aerial coolers, and fired heaters are the heart of the process facility. There are many aspects to consider when piping this equipment. A vertical vessel or tower is similar to a horizontal vessel in that it comprises a shell and two dished heads, one at the top and one at the bottom; the vertical is supported by a skirt welded to the bottom head. A vertical cylindrical pressure vessel may contain a series of bubble-cap trays or baffles designed to achieve good mixing and/or separation. The orientation of the internal trays will have a bearing on the nozzle orientation, which in turn affects the placement of ladders and platforms. The orientation of the nozzles is complex and the piping designer should have knowledge of the internal trays and their function and orientation, which in turn will determine the nozzle placement. Figure 9.29 shows a typical glycol contact tower and piping located around the tower. Access platforms are located at each manhole. Figure 9.30 shows a typical horizontal vessel showing nozzles, manholes, and associated piping.

Figure 9.29 Typical vertical vessel showing associated piping and access platforms.

Figure 9.30 Typical horizontal vessel showing associated piping and access platforms.

Vessel connections are often made with couplings (for smaller lines), flanged or welding nozzles, and pads fitted with studs, designed to mate with flanged piping. Nozzle outlets are also made by extrusion, to give a shape like that of a branch of a welding tee. This yields a good flow pattern, but is an expensive method usually reserved for such items as manifolds and dished heads. Weldolets, Sockolets, and Threadolets are suitable for vessel connections and are available flat-based for dished heads, tanks, and large vessels.

Almost any type of connection can be made to open vessels or vessels vented to atmosphere, but for pressure vessels, the applicable design code will dictate requirements for connections.

Refer to *Volume 1* and *Volume 2* for a complete description of all process equipment internals and associated internals used in oil and gas handling, conditioning, and processing facilities.

9.9.2 Separators, scrubbers, and towers

9.9.2.1 Pipe support

Without adequate support, some of the piping weight will be transferred to the vessel nozzles, specifically the weight of inlet and outlet risers on separators and scrubbers and a portion of the piping to the riser. To provide support to prevent mechanical stress, an 18 in. (45 cm) square, minimum size concrete pad should be placed under the riser (Figure 9.18). The thickness of the pad depends on the weight of the pipe, but it is generally 4 in. (10 cm) or greater. Even in poor soil conditions, this pad will support approximately 2 tons.

The height of towers normally requires that risers be longer than 15 ft. (5 m). The piping should be supported from the side of the vessel. Support should incorporate pipe guides that brace against lateral motion (to keep the pipe from swaying) and pipe supports to carry the risers' weight (Figures 9.31–9.33).

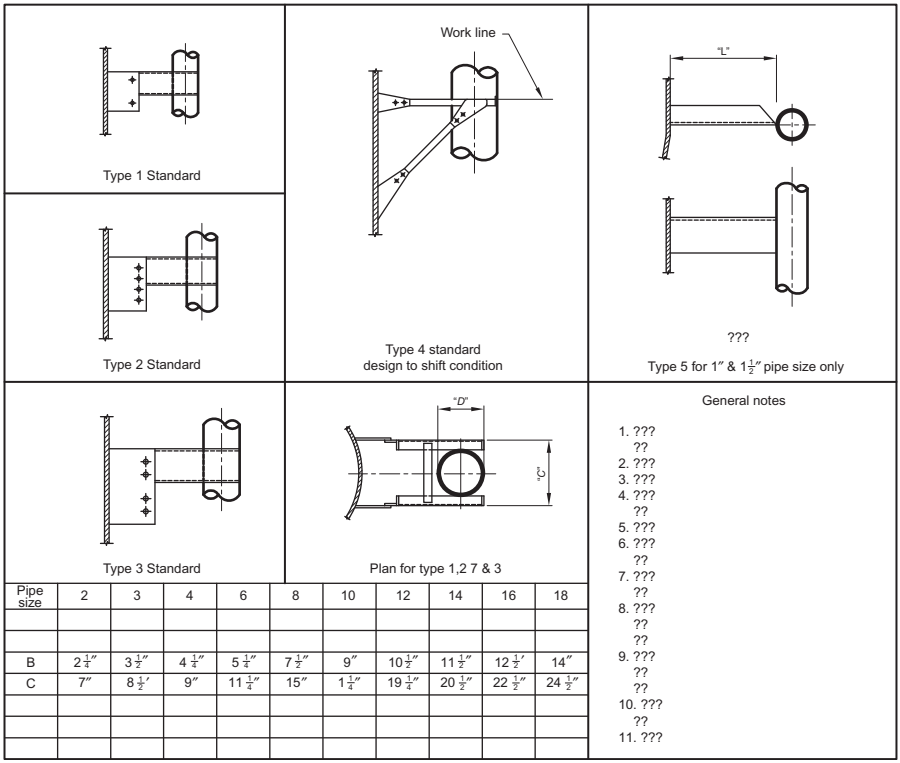

Pipe size	2	3	4	6	8	10	12	14	16	18
B	2 1/4″	3 1/2″	4 1/4″	5 1/4″	7 1/2″	9″	10 1/2″	11 1/2″	12 1/2′	14″
C	7″	8 1/2′	9″	11 1/4″	15″	1 1/4″	19 1/4″	20 1/2″	22 1/2″	24 1/2″

Figure 9.31 Vertical vessel pipe guides (Courtesy of Fluor Corp).

9.9.2.2 Liquid inlet piping requirements

Risers connected to a vessel below the liquid level must have a block valve on the nozzle. Liquid inlet lines located at the top of a tower (glycol contactors, heater treaters, and lean oil absorbers) should have a check valve at the inlet nozzle. This is mandatory when the liquid is moved by a reciprocating pump and fatigue failure due to vibration is a possibility upstream of the check valve.

All hydrocarbon liquid lines operating above 350 °F should be equipped with a check valve at the vessel nozzle so as to avoid a hot liquid spill. Feed lines 1½ in. or smaller to vessels must be equipped with a check valve at the vessel nozzle due to the low allowable bending of threaded pipe.

9.9.2.3 Vessel manual drains

Vessel manual drains should be equipped with both a block and blowdown (globe) valve (Figure 9.34), if the vessel operates at or greater than 100 psig and service is

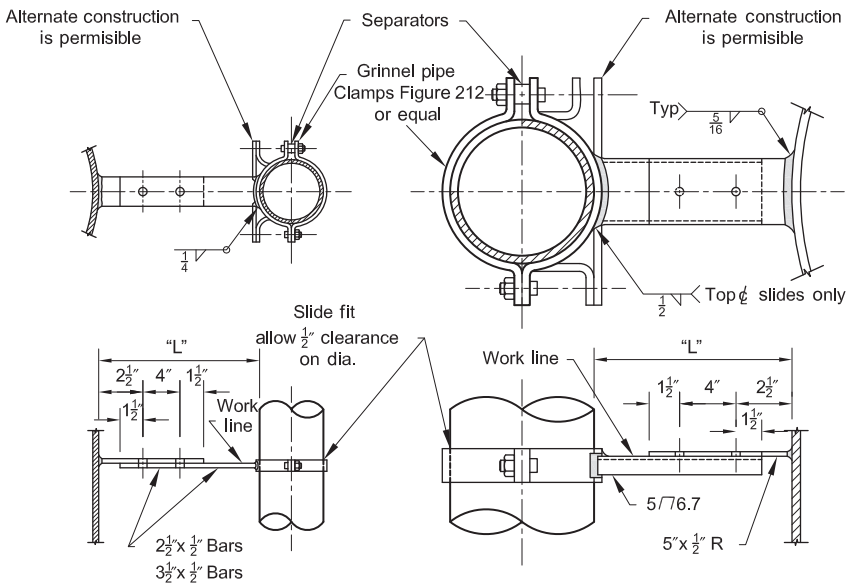

Figure 9.32 Vertical vessel pipe supports (Courtesy of Fluor Corp).

not practical to shut down. The globe valve is located downstream and used during throttled drain and blowdown operations. The valve must be located where the operator can see the sight glass gauge. The upstream block valve should be left in a full open position during drain and blowdown operations. If the globe valve becomes inoperative, it can be replaced without requiring a shutdown by closing the block valve. Any vessel that is periodically shut down for maintenance does not require double valves.

9.9.2.4 Bypass valves

All vessels containing replaceable filter elements (e.g., a filter separator) should be equipped with block and bypass valves (Figure 9.35) unless the facility is fully spared. Bypass valves should also be installed around vessels that may require maintenance if a temporary interruption of the vessel's function will not require a facility shutdown.

9.9.2.5 Threaded piping

Any threaded piping between a vessel and the first block valve must be Schedule 160.

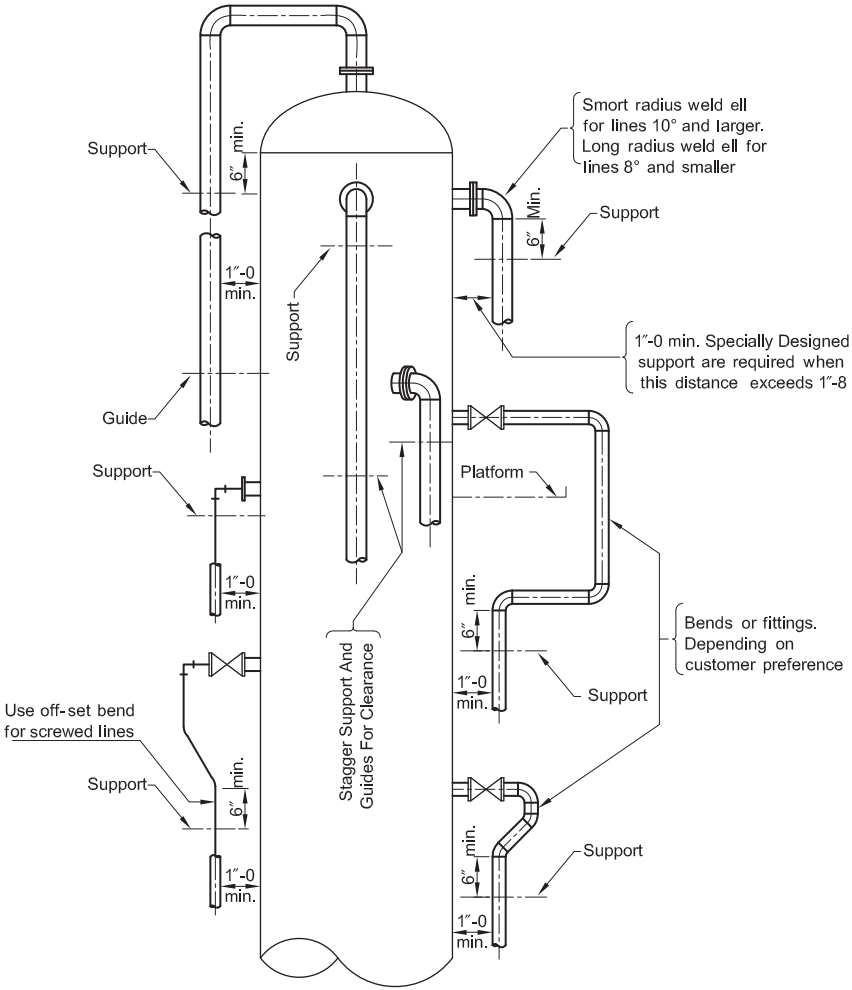

Figure 9.33 Typical vertical pipe support locations (Courtesy of Fluor Corp).

9.9.2.6 Manholes and nozzles

For a specific project or vessel, manholes are preferably of the same type. They should be located away from piping and within range of the davit. If required, manholes can be placed off the column centerlines. Manholes should permit easy removal of the unit, which may require them to be angled so as to allow piping to be installed in the desired position. The portions of the column wall available for nozzles are determined by the orientation and type of internals.

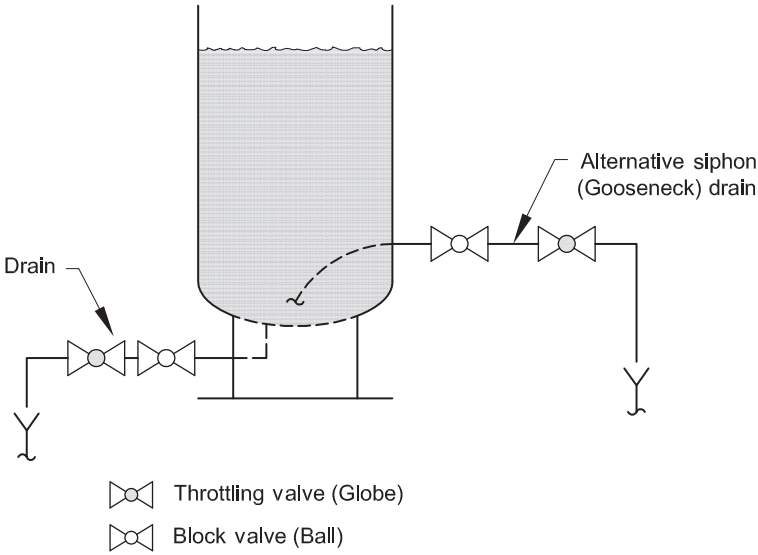

Figure 9.34 Liquid drain piping for vessels.

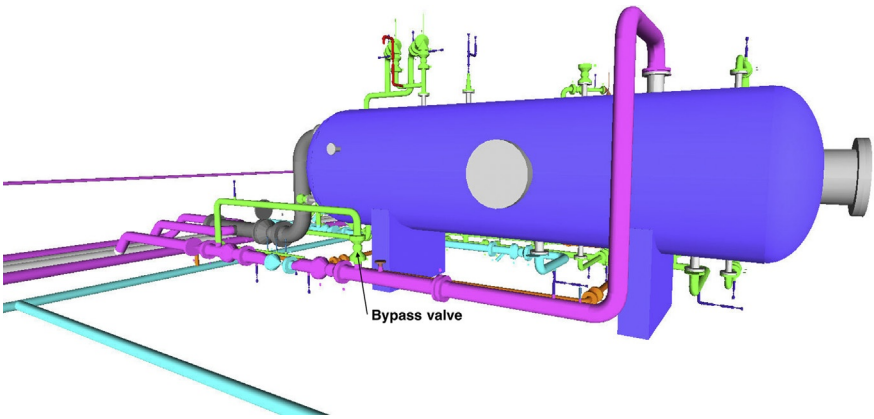

Figure 9.35 Bypass valve piping for a filter separator.

9.9.2.7 Platforms and ladders

Platforms are required under manholes, valves at nozzles, level gauges, controllers if any, and relief valves. Vertical vessels (e.g., filters) may be grouped and sometimes interconnecting platforms between columns are used. Individual platforms for a vertical vessel are usually shaped as circular segments. A platform is required at the top of a vertical vessel, for operating a davit, a vent on shutdown, and access to the relief valve. Ladders are arranged so that the operator steps sideways onto the platforms.

Ladder length is usually restricted to 30 ft. between landings. If operating platforms are further apart than 30 ft., a small intermediate platform should be provided. Ladders and cages should conform to the requirements of ASTM F1166. Davits should be located at the top of vertical vessels so that it can lower and raise vessel internals, piping, valves, etc.

Some guidelines for platforms and ladders include the following:

- Platforms on vertical vessels and towers should be kept to a minimum. They should be used for access and operation/maintenance of valves, manholes, etc.
- Platform access should always be provided for manways, handholes, control valves, valves 2 in. and above, and davit operation.
- Make certain there is sufficient clearance between platform supports and vessel nozzles and piping.
- Make certain davit can handle the weight of the internals.
- Make certain all internals are accessible for removable from the manhole to the overhead davit.
- Make sure the vertical clearance between platforms is a minimum of 6 ft. 9 in. (2 m).
- Make certain the maximum ladder run does not exceed 30 ft. (9 m) per OSHA requirements.
- Normally control valves and relief valves are 12-18 in. (307-465 mm) above platforms.
- Make certain all process instrumentation (TIs, PIs, LGs, etc.) can be read from the access platform. Where this is not possible, the instrument should be accessible from a ladder.

9.9.3 Heat exchangers

9.9.3.1 General considerations

Chapters 3 and 4 of *Volume 2* provide extensive coverage of heat exchangers. The basic heat exchanger configurations include

- shell-and-tube,
- double-pipe (fin-tube),
- plate-and-frame,
- fin-fan cooler.

9.9.3.2 Shell-and-tube exchangers

The most common heat exchanger configuration is the shell-and-tube exchanger where one stream, usually the one that leaves the most deposit, that is, water, flows through the tubes and the other stream goes through the shell side. Provisions must be made to withdraw the tubes for cleaning. This area must be kept free of piping and other obstructions. Shell-and-tube exchangers are manufactured in accordance with Tubular Exchanger Manufacturers Association (TEMA) code. Figure 9.36 shows the TEMA designations for shell-and-tube exchangers. Figure 9.37 is an example of the TEMA nomenclature used to describe a shell-and-tube exchanger.

Whenever possible, exchangers should be located at grade to facilitate maintenance and tube withdrawal. Two or more shells forming one unit will be stacked or otherwise arranged as indicated on the exchanger specification sheet.

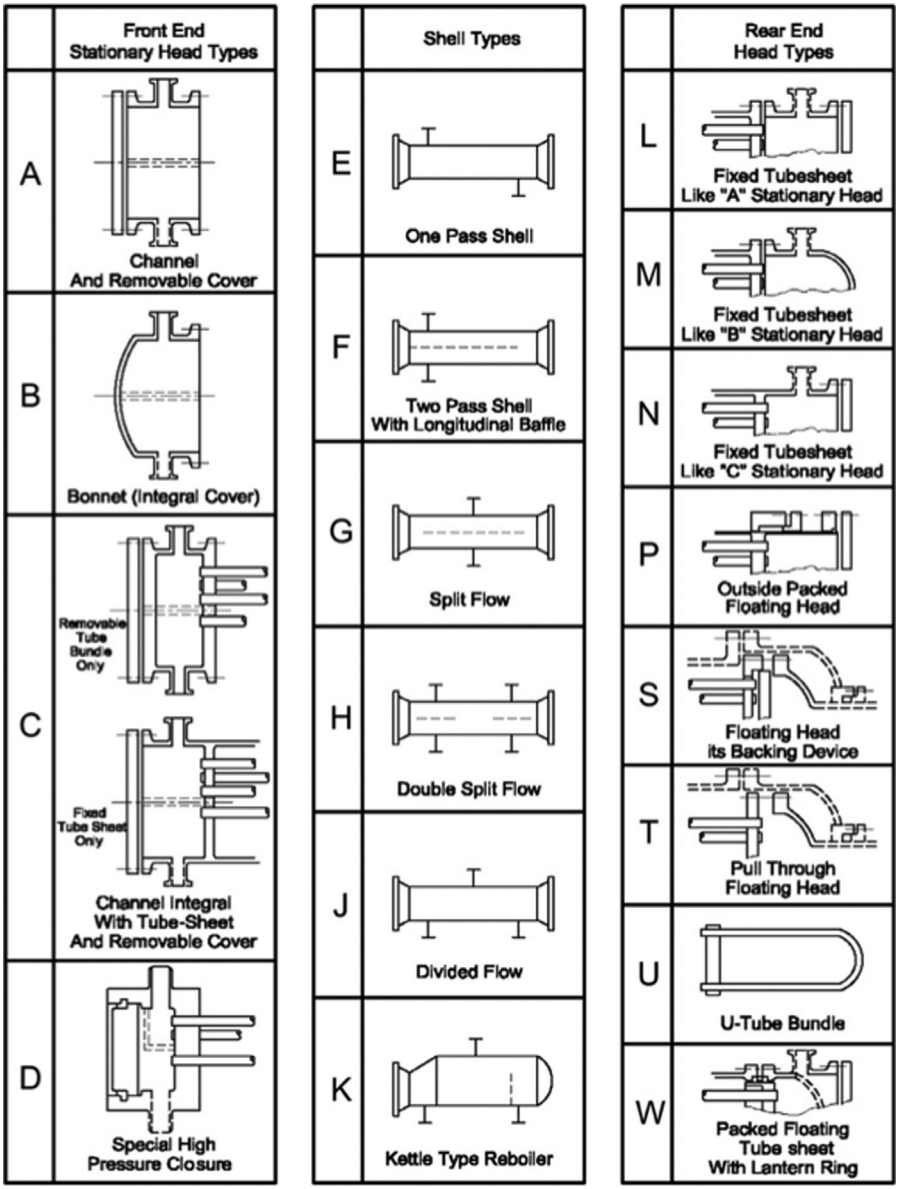

Figure 9.36 TEMA designations for shell-and-tube exchangers.

The basic rule for piping all heat exchangers is that fluid being heated flows up while fluid being cooled flows down. If there is a potential for accumulation of non-condensable vapors in an exchanger header or shell in liquid service, the flow direction should be upward to provide a constant purge of vapors (Figure 9.38).

1. Stationary Head-Channel
2. Stationary Head-Bonnet
3. Stationary Head Flange-Channel Or Bonnet
4. Channel Cover
5. Stationary Head Nozzle
6. Stationary Tubesheet
7. Tubes
8. Shell
9. Shell Cover
10. Shell Flange-Stationary Head End
11. Shell Flange-Rear Head End
12. Shell Nozzle
13. Shell Cover Flange
14. Expansion Joint
15. Floating Tubesheet
16. Floating Head Cover
17. Floating Head Flange
18. Floating Head Backing Device
19. Split Shear Ring
20. Slip-On Backing Flange
21. Floating Head Cover-External
22. Floating Tubesheet Skirt
23. Packing Box
24. Packing
25. Packing Gland
26. Lantern Ring
27. Tierods & Spacers
28. Transverse Baffles Or Support Plates
29. Impingement Plate
30. Longitudinal Baffle
31. Pass Partition
32. Vent Connection
33. Drain Connection
34. Instrument Connection
35. Support Saddle
36. Lifting Lug
37. Support Bracket
38. Weir
39. Liquid Level Connection

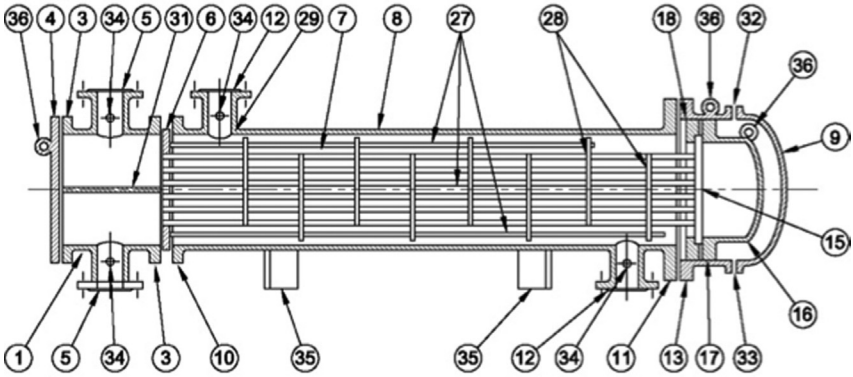

1-Pass Shell, 2-Pass Tube Exchanger

Figure 9.37 TEMA nomenclature used to describe an AES shell-and-tube exchanger.

Preliminary exchanger information should be provided early to the piping group, so that piping studies can be made with special attention to the orientation of nozzles. Before arranging heat exchanger piping, the PFD and exchanger data sheets should be provided.

9.9.3.2.1 Block and bypass valves on multiple unit installations

Block and bypass valves are required if a heat exchanger is in critical service and cannot be removed from operations. Figure 9.39 shows heat exchangers piped in series, while Figure 9.40 shows heat exchangers piped in parallel. This allows individual exchanger units to be serviced and repaired while the process unit is in operation.

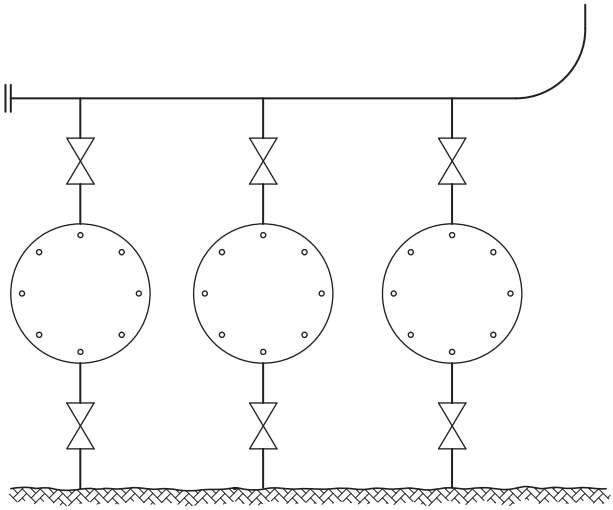

Figure 9.38 Piping for upward flow through a heat exchanger.

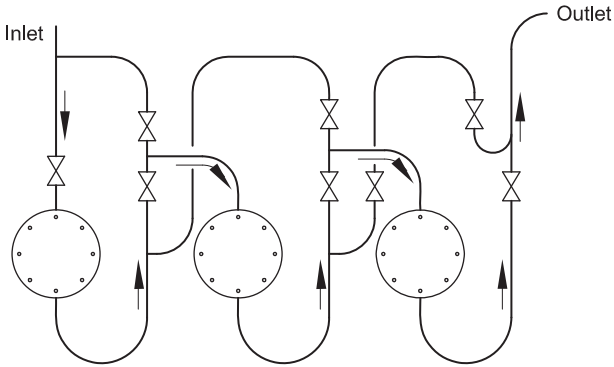

Figure 9.39 Heat exchangers piped in series heat exchangers.

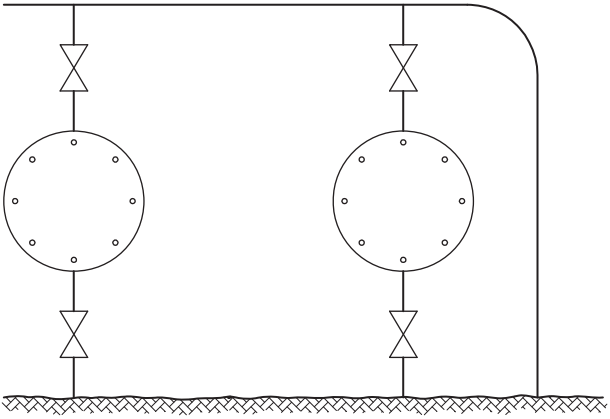

Figure 9.40 Heat exchangers piped in parallel.

9.9.3.2.2 Thermal relief, thermowells, and pressure taps

Heat exchangers should be inspected to determine if thermal relief has been provided for cold-side service to prevent overpressure if cold flow is blocked while hot side flow continues. If none is provided, a piping spool with a relief valve connection is required. Thermowells and pressure taps must also be installed in the piping on both the hot and cold streams to allow for performance testing.

9.9.3.2.3 Thermal stress considerations

Since heat exchanger services involve the piping of fluids at elevated temperatures, the piping must be analyzed for thermal stresses. Thermal stresses are discussed later in this chapter.

9.9.3.2.4 Vibration stress considerations

If the fluid is from reciprocating equipment and is pulsating, tentative anchor points should be selected to prevent vibrating stresses from being applied to the exchanger nozzles. Vibrating stresses must be controlled by restraints prior to analyzing thermal stresses.

9.9.3.2.5 Maintenance considerations

Piping of shell-and-tube heat exchangers must be arranged to allow for the removal of channels (heads) that have pipe connections. Enough space must be allowed in front of the exchanger for cleaning and pulling the tube bundle.

9.9.3.3 Double pipe (fin tube)

As shown in Figure 9.41, a double-pipe exchanger consists of a double-pipe configuration where a smaller pipe runs inside a larger pipe and the heat exchange takes place across the wall of the inside pipe. U-shaped horizontal fins are welded to the inside tubes, which provide a more uniform heat exchange between the pipes, as discussed in Chapters 3 and 4 in *Volume 2*. As shown in Figure 9.42, one of the advantages of this configuration is that their mounting brackets allow them to be installed in series or parallel multigroups to facilitate a greater flow or heat exchange.

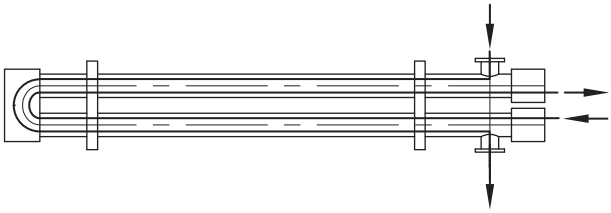

Figure 9.41 Double-pipe exchanger.

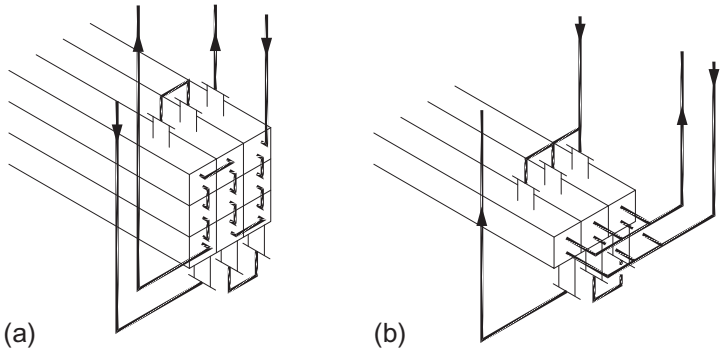

Figure 9.42 Double-pipe exchanger: (a) series flow; (b) parallel flow.

9.9.3.4 Plate-and-frame exchangers

Plate-and-frame exchangers take up less floor space than shell-and-tube exchangers and do not need clearance to remove the tube bundle; however, the plates are subject to fouling in viscous service (refer Figure 9.43). As shown in Figure 9.44, the single-pass unit is the most common plate-and-frame exchanger configuration where the heated and heating fluids pass through the exchanger once (in a counterflow manner). All of the feed and discharge pipes are connected to the fixed plate. This is a particularly maintenance-friendly installation. Close temperature differences between the two fluids may demand multipass heat exchangers. The connection pipes are then attached to the fixed and pressure plates.

Depending on the temperatures involved, the pipe connected to the upper nozzles may have to be supported with spring hangers located as close to the nozzles as possible. It is important to minimize loading as this could lead to plate misalignment.

9.9.3.5 Fin-fan coolers

Fin-fan coolers are used in many facilities. Ambient air is moved past the tube bundle by way of a large fan(s). As the fluid to be cooled travels through the tubes, the air transfers heat from the fluid to the atmosphere. Fin-fan coolers are constructed in two basic designs: induced draft and forced draft. Figure 9.45 shows the induced draft design where the fans are located above the tube bundle while Figure 9.46 shows a forced draft unit where the fans are located below the tube bundle.

Piping should be sufficiently supported while flexible enough to comply with vendors' allowable nozzle stresses. Piping should not be routed across the air fin tube bundle areas in such a way that would obstruct the removal of the bundles. The inlet piping to the unit should enter at the top nozzle(s) and exit the bottom nozzle(s) as the line is being cooled down. Chapter 4 in *Volume 2* provides a detailed description of fin-fan coolers.

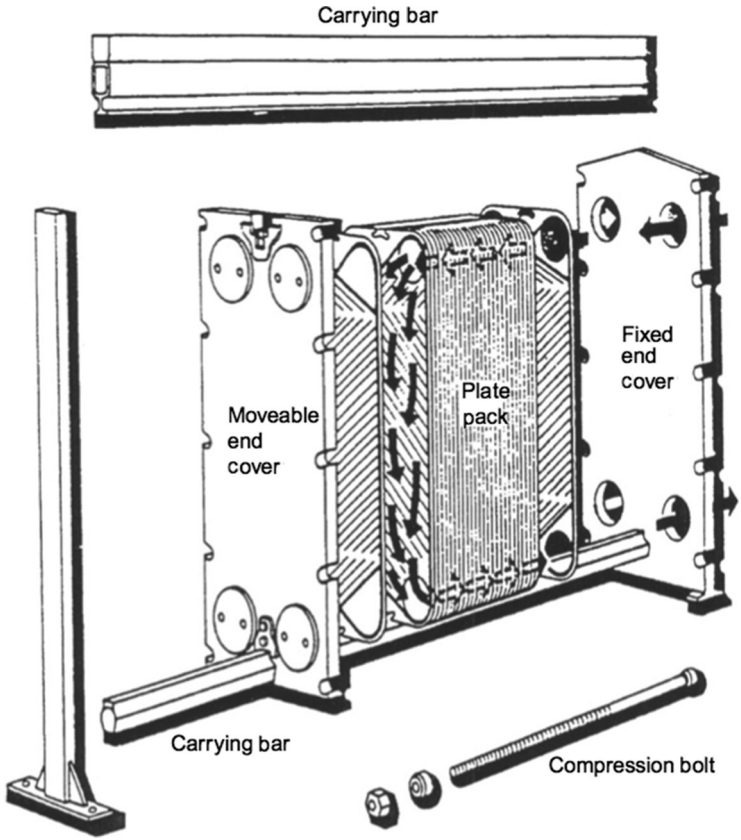

Figure 9.43 Plate-and-frame exchanger.

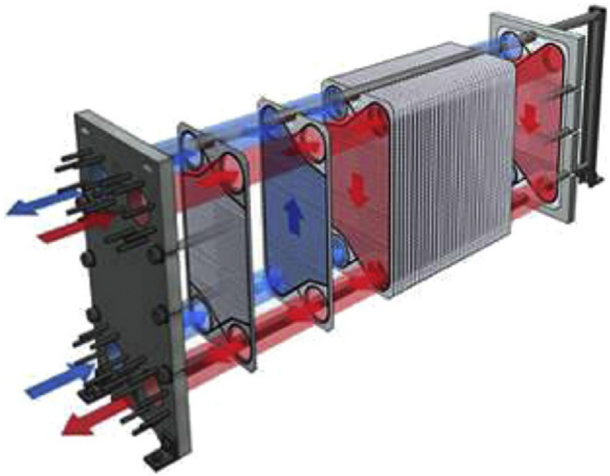

Figure 9.44 Flow pattern through a single-pass unit.

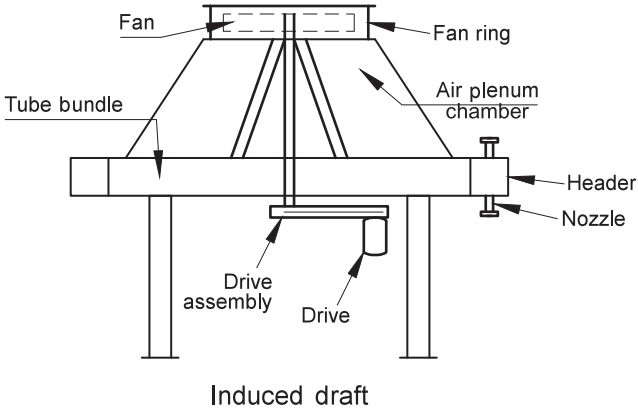

Figure 9.45 Induced draft fin-fan cooler.

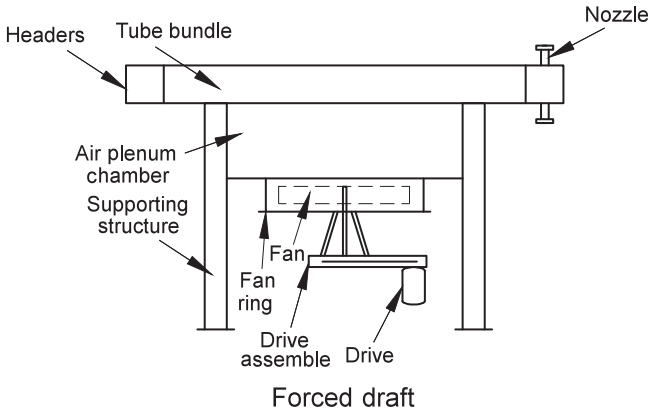

Figure 9.46 Forced draft fin-fan cooler.

9.9.4 Fired components

9.9.4.1 Access

Fired heaters must be piped to allow removal of tube headers and tubes. Piping must also be routed to allow access to explosion, observation, and inspection doors. Flow direction must comply with the manufacturer's recommendations.

9.9.4.2 Blowdown valve

Fired heaters handling combustible liquids become self-destructive if a tube bursts and liquid is discharged into the combustion chamber. If this potential exists, a blowdown line should be installed to allow dumping of the heated stream to a safe area (Figure 9.47).

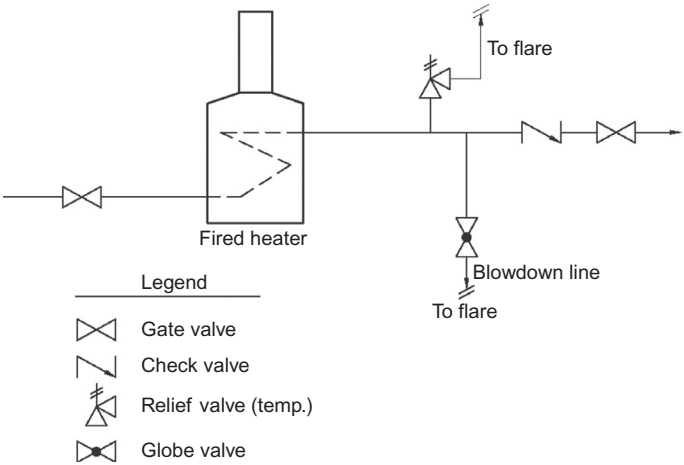

Figure 9.47 Fluid stream piping for a fired heater.

9.9.4.3 Block valves

Each process fluid to the heater area must have a block valve on both the inlet piping and outlet piping at a location at least 50 ft. (16 m), and preferably further, from the nearest heater to allow heater isolation if a tube ruptures.

9.9.4.4 Thermal relief, check valve, and associated valves

A thermal relief valve discharge to a closed system must also be located between the inlet and outlet block valves to protect against thermal expansion of fluid when the unit is shut down and valves are closed. The outlet line must contain a check valve to minimize backflow into the heater if a tube ruptures.

To maintain even flow of split parallel heater passes, an orifice flange with orifice and butterfly valve should be installed on the inlet to each pass. To minimize throttling, the distribution manifold should have symmetrical legs. All relief and blowdown lines must discharge into a closed flare system.

9.9.4.5 Multiple burner considerations

Piping of the fuel to a fired heater should provide accessibility to remove the burners. Multiple burner heaters should be piped with a supply header with globe valves and individual fuel supply lines to each burner. The header should slope downward in the direction of the fuel flow with a condensate collection sump or leg at the end of the header. The sump must have a globe valve to a closed drain connection with the condensate piped to a safe distance from the heater. All fuel supply lines to the burner should be connected to the top of the header to prevent liquid ingestion.

When more than one heater is served by the fuel system, each heater should be manifolded into a fuel header and each branch line from the header must contain a

block valve with a spectacle blind installed downstream. This provides the means to positively isolate each heater to prevent accidental release of gas into a heater cabinet when internal repairs are being performed.

There should be a master valve on the main fuel line at least 50 ft. from the nearest heater to allow closure when fire requires heater area shutdown.

9.10 Control valve loops

9.10.1 Block and bypass considerations

Block valves and bypass valves allow ease of repair and maintenance. Flow can be controlled manually through the bypass while the control valve is under repair (Figure 9.48).

9.10.2 Vent valves

Vent valves should be installed between the block valves to allow depressurizing before breaking the line connection to the valve. The vent valve is usually a ½ in. valve located downstream of the control valve. Due to the potential of pressure being trapped upstream of the control valve if stem breakage occurs or the valve seats become plugged, a vent may also be desirable upstream of the control valve in gas or flashing liquid services.

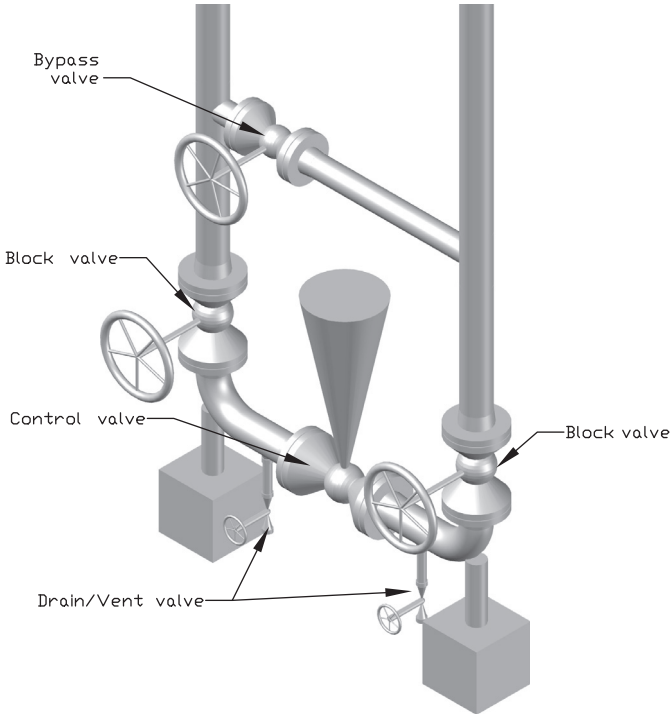

Figure 9.48 Control valve loop piping.

9.10.3 Controlling sensing points

Being a throttling service, bypass requires a globe valve. Controller sensing points should be located outside the control loop, thus allowing use of the line pressure to adjust the controller before returning the valve to service.

9.10.4 Serviceability

Control loops should be serviceable from ground-level, or if the valve must be elevated, it should be provided with a service platform. In areas where piping is on racks, line drops or risers should be used to mount the loop at ground-level.

9.10.5 Support

All control loops should be supported from below with concrete pads to distribute the load transferred to the ground. Never support a loop from the pipe racks. The pipe-rack span is designed only for the pipe loading, and the weight of the control loop will cause the pipe to sag and apply a bending moment to the pipe.

9.11 Piping machinery

9.11.1 General considerations

The most commonly used machinery in production operations include

- compressors,
- pumps,
- expanders,
- turbines,
- generators,
- mechanical filters.

Machinery housing consists of cast iron or steel cast housings with forged steel in high-stress components. Any bending or torsional moments caused by the piping are applied directly to the housing. These loads may result in bearing and parts misalignment that will lead to excessive wear and eventual equipment failure. Proper design of piping configurations and types of connections are necessary to avoid catastrophic failures.

9.11.2 Centrifugal compressors

A compressor is usually purchased as a "packaged unit," which includes coolers and scrubbers, and the designer is responsible for installing it and piping auxiliaries to it. Compressors may be installed in the open or within a process plant or separate compressor building. An arrangement of compressor, ancillary equipment, and distribution lines is shown in Figure 9.49. A detailed discussion on centrifugal compressors is provided in *Volume 4*.

The following guidelines are applicable to compressor buildings:

- If the compressor is handling heavier-than-air gases, eliminate pits and trenches in the compressor building so as to avoid an explosion risk.

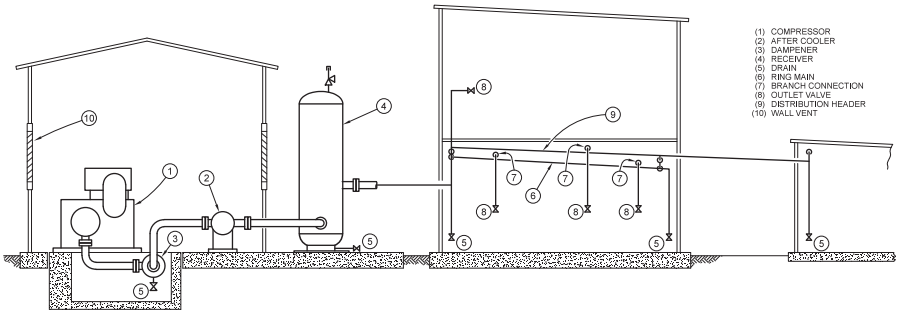

Figure 9.49 Schematic arrangement of compressor, ancillary, and distribution lines.

- Provide air entry louvers if a compressor takes air from within a compressor building or other buildings.
- Provide maintenance facilities, including a lifting rail or access for mobile lifting equipment. Allow adequate floor space for use during maintenance. Additional access may be required for installation.
- Prevent transmission of vibration by providing a foundation for the compressor, separate from the compressor building foundation.
- Consider the use of noise-absorbing materials and construction for a compressor building.

9.11.2.1 Side case piping

Side case piping presents few conventional piping problems. Most units are manufactured with side case piping configurations (Figure 9.50).

9.11.2.2 Top case piping

Some units may be equipped with top and bottom connections as shown in Figure 9.51.

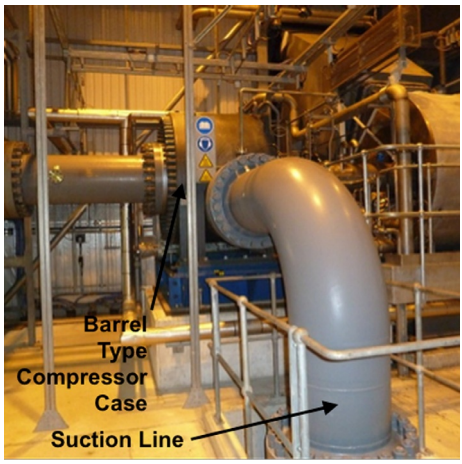

Figure 9.50 Centrifugal compressor with side case piping.

Figure 9.51 Centrifugal compressor with top case piping.

9.11.2.3 Vertical split casing

Both of the aforementioned compressor housings are vertical split-case (barrel-type) designs. Working parts of the barrel case compressor can be removed through the end of the case without breaking the pipe connections (Figure 9.52).

9.11.2.4 Horizontal split case

In the horizontal split case, the housing must be lifted above the rotor blades. If nozzles are located on top of the compressor, piping spools (Figure 9.53) must be installed so that the upper case can be removed for easy access. Since these machines are high capacity, the pipe is of a large diameter, heavy, and stiff and thermal expansion becomes a concern.

9.11.2.5 Nozzle stress

Analysis of thermal expansion is necessary to assure that forces on the nozzles do not exceed the manufacturer's recommendations. The weight of the pipe assemblies should be determined in the installed and operating conditions. If the weight is excessive, spring hangers should be used to carry the load.

9.11.2.6 Suction and discharge piping

Suction lines should be fully open to minimize pressure loss and turbulence at the compressor suction nozzle. Discharge lines may contain reduced port valves and must have a check valve to minimize back flow, which can cause a compressor rotor overspeed in reverse rotation sufficient to cause damage.

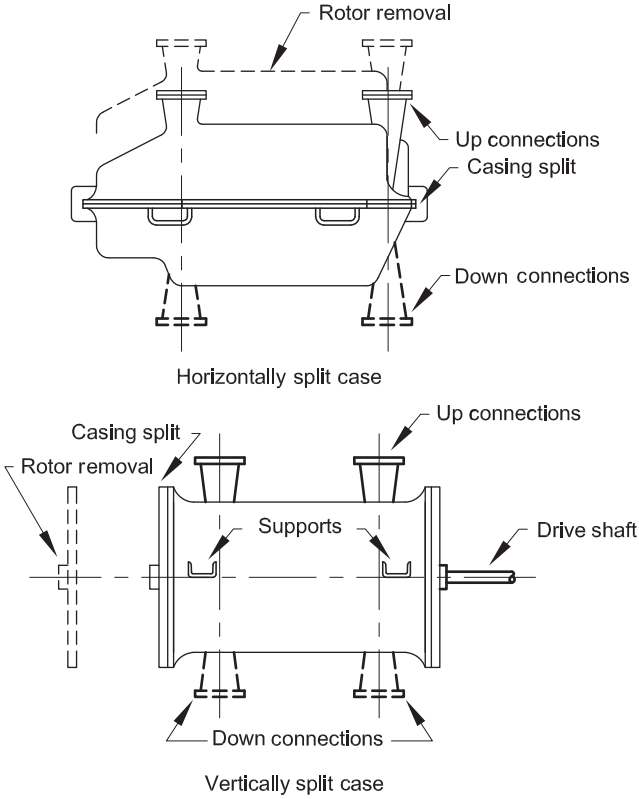

Figure 9.52 Horizontal and vertical split-case centrifugal compressor.

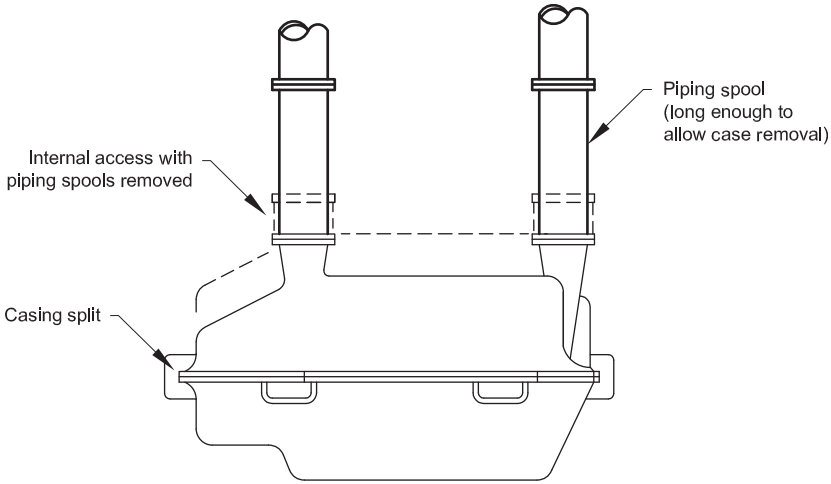

Figure 9.53 Horizontal split-case centrifugal compressor with top connections.

9.11.2.7 Lube and seal piping

The function of compressor seals is to isolate the gas stream from the atmosphere and journal bearings. Depending on the application, seals may be labyrinth, carbon type, or positive seal design using seal oil. An important aspect of centrifugal compressor lube oil piping is the quality of the seal oil system. The system must be absolutely clean. ASTM A312 type 304 stainless-steel material is the best selection as it is free of corrosion products and mill scale and can be used without special preparation other than solvent cleaning and flushing. The same is true for buffer gas injection piping.

9.12 Gas engines

9.12.1 General considerations

During the starting cycle of a gas turbine (Figure 9.54), the compressor rotor must be brought up to firing speed. With a very high gas flow rate required for starting, the gas piping must be adequately sized.

9.12.2 Pressure regulator

The pressure regulator for starting should be a quick-acting type and close to the turbine.

9.12.3 Starter valve

The starter valve should be a quick-closing valve and a continued feed of gas should open to the relief valve.

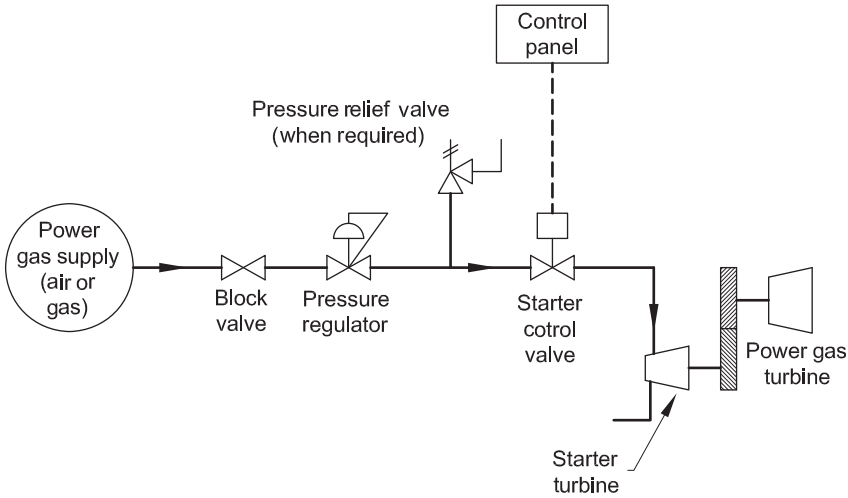

Figure 9.54 Gas turbine starting air or gas piping.

9.12.4 Relief valve

A relief valve is required downstream of the starter pressure regulator to ensure that overpressurization does not occur unless the entire system through the control valve is raised for the source pressure. This system may vary depending on the manufacturer's starter design.

9.13 Steam turbines

9.13.1 General considerations

A turbine is a machine for deriving mechanical power (rotating shaft) from the expansion of a gas or vapor (usually air or steam). Steam turbines are used where there is a readily available source of steam and are also used to drive standby process pumps in critical service in the event of an electrical power failure and emergency standby equipment such as firewater pumps and electric generators. Steam turbine piping must be thoroughly analyzed for thermal stress. To achieve high efficiency, the steam is usually superheated.

9.13.2 Inlet (steam feed)

In order to guard against damage to a steam turbine, protective piping arrangements such as those outlined in Tables 9.6 are required in the steam feed.

9.13.3 Exhaust (steam discharge)

Figure 9.55 shows three methods for dealing with the turbine's exhaust. Steam from an intermittently operated turbine may be run to waste and all that is required is a simple run of pipe to the nearest outside wall or up through the roof. Exhausts should be clear of the building and arranged so as not to be hazardous to personnel. The turbine discharge will include drops of water and oil from the turbine, which is best collected and run to a drain. As an alternative, the steam discharged from a continuously running turbine may be utilized elsewhere, in a lower-pressure system.

Table 9.6 Protective piping for feeding steam to turbine

Hazard to turbine	Protective piping
Foreign matter and water in the steam feed	Drip leg and strainer, or separator in the feed line
Excessive pressure in steam feed causing over-fast running of casing rupture	Pressure relief valve and/or control valve in the feed line
Thermal shock, due to rapid heating on startup	Orifice bypass to feed small amount of steam to turbine at all times

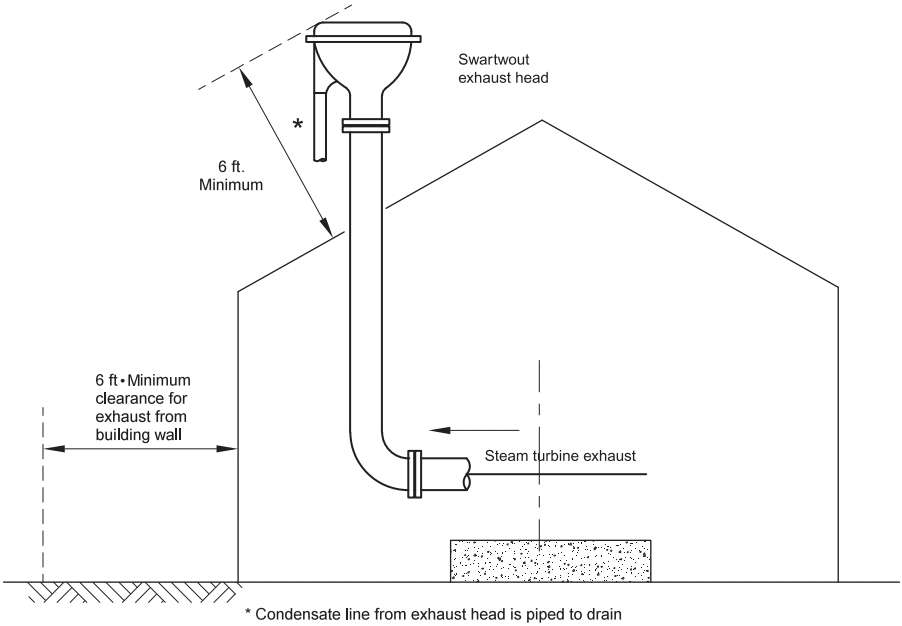

Figure 9.55 Typical turbine exhaust piping arrangements.

9.13.4 Bypass steam and other piping considerations for turbines

An orifice plate is used as a "bleed" bypass to ensure that steam constantly passes thru the turbine. An orifice plate is used rather than a straight pipe, as a changeable construction is needed. As an alternative, the small amount of steam needed to keep the turbine warm can be admitted by cracking open a valve in the bypass. This alternative is a wasteful practice.

9.13.5 Piping metallurgy

The metallurgy of the pipe (ASTM specifications) should conform to the requirements for steam service as shown in Table 9.7.

9.14 Reciprocating compressors

9.14.1 Vibration considerations

In addition to static forces, reciprocating compressors generate a pulsing flow that applies dynamic forces to the pipe. A means for reducing these forces must be considered so as to avoid wasting horsepower and reduce vibration to acceptable levels.

Table 9.7 Metal design temperatures

Item	650° to 60 °F
Pipe	API 5L Grade B A53 Grade B type S A106 Grade B
Welded fittings	A234 Grade WPB
Forged flanges, valves, and screwed fittings	A105 Grade II (A181 Grade I 300# and 150# ANSI only)
Cast steel valves	A216 Grade WCB
Cast iron valves	A126 Class B (150 °F maximum)
Bolting	A193 Grade B7 (A307 Grade B for 125# ANSI to 150# ANSI to 350 °F)
Nuts	A1 94 Grade 2H (A307 for 1 25# ANSI to 1 50 °F and 150# ANSI to 350 °F)

Note: For higher temperatures, consult ASME B31.3 Code.

Piping configuration and piping elements must be arranged to minimize the transferring of the dynamic forces to the pipe. A detailed discussion of reciprocating compressors is provided in *Volume 4*.

9.14.2 Compressor cylinders

Compressor cylinders contain relatively fragile valve parts. Close tolerances make these parts vulnerable to damage by any liquid or solid particles that may enter the cylinder rod packing, the compressor rod, piston rings, and the cylinder. Cylinders must always be protected against this contingency.

9.14.3 Auxiliary equipment

The designer needs to consider the influence of malfunctioning auxiliary equipment such as scrubbers. Even though gas reaching the suction manifold has been through separation, liquid and solids will carry over. If there are sufficient liquid quantities, valve plates will be damaged. Part fragments will score the cylinder and/or damage the pistons. At each point where liquids can be trapped in the piping, drains should be provided.

9.14.4 Suction lines

Figure 9.56 shows piping for an integral compressor. Gas is taken from the top side of the suction header at a 45° angle. The top connection allows upstream liquid carryover to accumulate in the header.

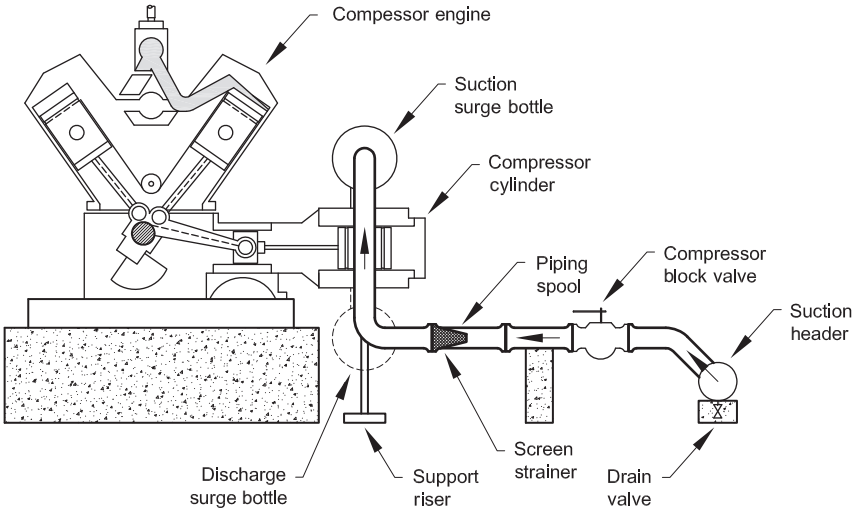

Figure 9.56 Reciprocating compressor suction line piping.

9.14.4.1 Drain valve

The drain valve allows liquids to be withdrawn periodically to minimize liquid entry into the compressor cylinder. The suction line to the compressor may also connect from below. Note that the connection is also at a 45° angle and the line protrudes into the header to prevent liquid from flowing into the suction line.

9.14.4.2 Compressor block valve

The compressor block valve is normally the same size as the line, thus providing assembly stiffness or resistance to bending moments. If conditions permit, the valve may be one size smaller than the line size.

9.14.4.3 Piping spools

Piping spools provide the housing for a wire mesh screen that will limit solid particle ingestion in the cylinder to a predetermined size. A minimum number of piping turns should be used to reach the suction surge bottle (pulsation dampener) to minimize pressure loss in the suction line.

9.14.4.4 Support riser

The support riser relieves the surge bottle of the need to support the riser. Thus, it avoids a potential surge bottle nozzle failure that could result from the additional stress imposed by the weight of the riser when not supported.

9.14.5 Discharge line

9.14.5.1 Surge bottle

Figure 9.57 shows the discharge piping from the compressor cylinder. Gas enters a discharge surge bottle that is designed to provide a capacitance that limits the pressure level of the pulse entering the piping to an acceptable level. The adjustable support is left disconnected until the line reaches the operating temperature. The clamp is tightened until it provides a snug support with the bottle in its thermally extended position.

9.14.5.2 Stub and kick plate

Since the bottle must be free to move vertically and the discharge line moves horizontally, the expansion is controlled by a stub projecting from the bottle against a kick plate on the compressor foundation thus allowing the point of contact to float vertically.

9.14.5.3 Guide clamp

Thermal expansion grows toward the discharge line, and thus, only guide clamps should be used. Maximum thermal expansion at 300 °F (149 °C) would be approximately ½ in.; thus, the discharge is provided with this amount of freedom within the guide clamps. Discharge lines must be analyzed for thermal expansion stress.

9.14.5.4 Relief valve

The relief valve should comply with ASME B31.3 Piping Code and ASME Pressure Vessel Code Section VIII. The relief valve should be installed without an inlet block valve in a single-valve installation.

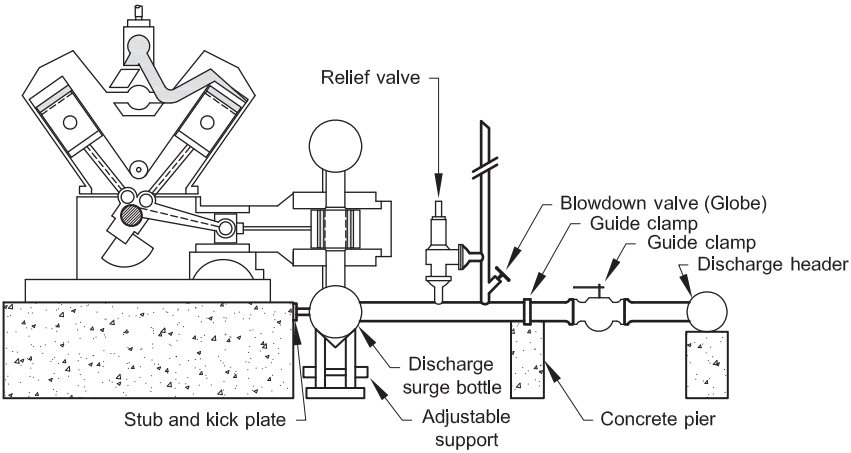

Figure 9.57 Reciprocating compressor discharge line piping.

9.14.5.5 Blowdown valve

The blowdown valve is an inclined stem globe valve.

9.14.5.6 Block valve

The block valve is a full line size regular port plug valve. The valve should be installed as close as practical to the concrete pier support to transfer the vent thrust to the support.

9.14.5.7 Discharge check valves

Remote unmanned compressor installations are usually equipped with a discharge check valve to simplify start-up procedures.

9.14.5.8 Funnel drains

As shown in Figure 9.58, funnel drains are used to collect liquids draining from the compressor cylinder distance pieces and rod packing.

9.14.6 Fuel lines

9.14.6.1 Pressure requirements

Pressure requirements vary from a few ounces to 200 psi for internal combustion compressor drivers. Fuel gas should be supplied to the driver at full fuel system pressure. This minimizes the piping size and prevents excessive pressure drop.

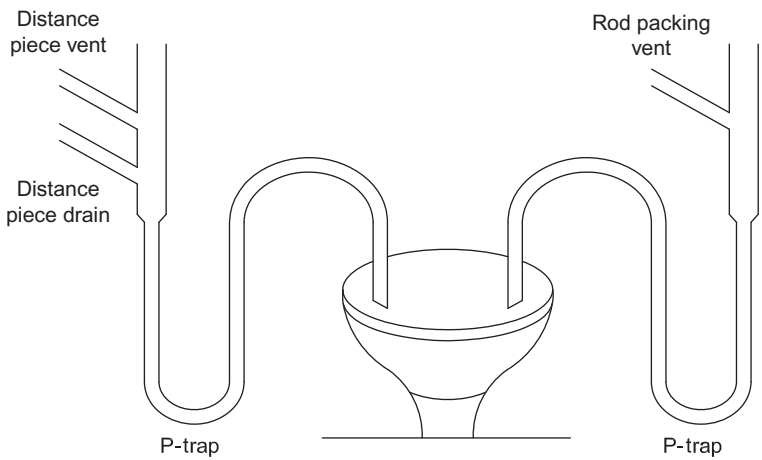

Figure 9.58 Funnel drain.

9.14.6.2 Pressure reduction considerations

A single-stage pressure regulator is used for high-speed drivers requiring a fuel pressure of 20 psig and higher and horsepower up to 1500. Two-stage pressure regulator, with small surge bottle between the regulators, is used for fuel pressure requirements between 20 and 10 psig. Two-stage pressure regulator, with two surge bottles to prevent erratic delivery, is used for fuel pressure requirements less than 10 psig.

9.14.6.3 Fuel volume bottle

Fuel volume bottles are usually required on large horsepower slow-speed engines that require fuel gas pressures of 20 psig (1.4 barg) or less. Without this bottle, attempts to respond to an increased load or acceleration may stall the engine. The bottle stores the fuel necessary to meet the initial demands of the engine, allows time for the fuel regulator to respond, and smoothes the regulator response to pulsing demand. Most installations use an individual fuel surge bottle for each engine.

9.14.7 Lube oil lines

9.14.7.1 Mill scale considerations

Compressor lube oil must be kept absolutely clean. Mill scale particles are highly abrasive and may work loose in service and plug the oil filter. This will reduce lubrication and damage machine internal parts.

After fabrication, the line should be disassembled and flushed with an inhibited 15% hydrochloric acid solution. The solution should be circulated through the pipe until all the mill scale has been removed. Stainless-steel pipe is recommended for very short lube oil piping on small machines, thus eliminating the acid cleaning requirements.

9.14.7.2 Lube oil makeup system

Most engines and compressors are equipped with an automatic lube oil makeup system. To provide this service, it is necessary to pipe oil from the lube oil storage tank to an inlet regulator and level control at the engine. The line must be kept warm in the winter to maintain flow. It is often placed adjacent to the hot jacket waterline or a heat-traced insulated line is used in extremely cold climates. The oil makeup line should be equipped with a powered block valve to automatically block flow when the fire protection system is activated.

9.14.8 Engine jacket cooling waterlines

Engine jacket cooling water piping is routed so that the water enters the lowest level on the engine and flows upward. Discharge waterlines must not contain vapor traps. If traps are unavoidable, a vent line must be connected to the trap and the trapped gases should be piped to the jacket cooling water surge tank.

9.15 Vent lines

9.15.1 Packing box

Compressor cylinders can leak gas through rod packing to the cylinder distance piece. The vent is installed in the packing box to prevent large volumes of gas from reaching the distance piece. Since the packing vent handles high-pressure gas and the distance piece low-pressure gas, the leakage from each source is manifolded into separate headers.

9.15.2 Headers

Lube oil leakage is drained from the distance pieces into a common header. Headers for the distance piece vent and lube oil drains have equal pressures and may tie into a common vent stack with the drain connected below the vent header. Compressor rod packing vent is at a higher pressure and is separated from the distance piece vent due to the backflow potential from the vent into the distance piece (Figure 9.45).

9.16 Compressor cylinder jacket cooling waterlines

A provision should be provided for handling a potential leakage of gas from the cylinder into the jacket water. Most jacket water channels are designed for low pressure. The material used is usually cast iron, which fragments when it fails under high pressure. To prevent inadvertent trapping of gases in the cylinder jacket, a block valve is not recommended on the outlet side of the cylinder. A block valve should be placed on the jacket water inlet and a check valve on the outlet piping. This allows gas to escape while preventing water spills when the pipe is disconnected at the compressor cylinders. The gas cannot be trapped by the operator failing to open the discharge valve, because the check valve is a self-opening valve.

9.17 Drain lines

Open funnel drains must be installed to provide drainage for lube oil and jacket water from the compressor and the engine. The drains from the vent stacks should also discharge through a “p” trap into one of the open drains.

9.18 Exhaust lines

9.18.1 Flexible pipe and muffler support

Most engine exhaust manifolds are cast iron. Excessive stresses caused by thermal expansion of the exhaust line can easily damage the manifold flanges. To avoid these stresses, the design may include flexible pipe and muffler supports (Figure 9.59) that will limit thrust to a safe level or the use of expansion joints. Flexible supports are

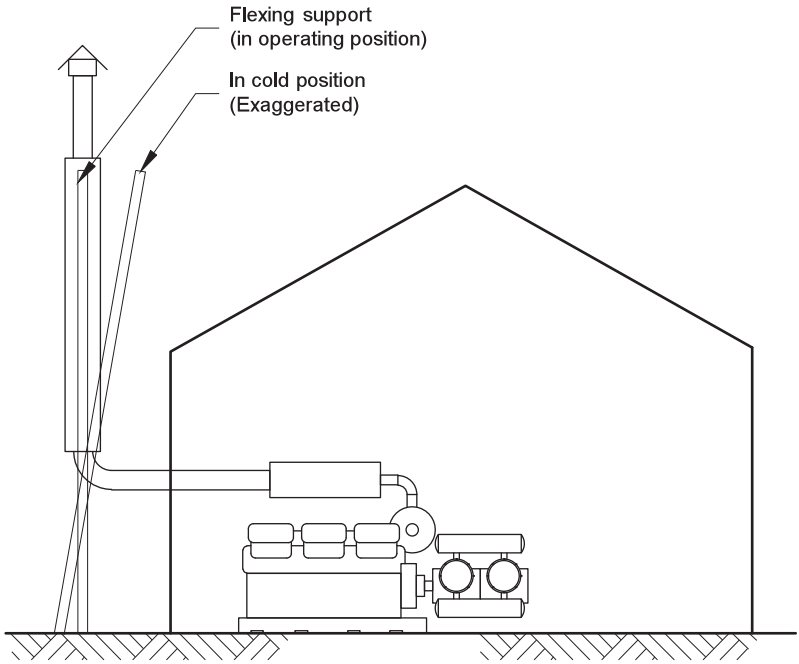

Figure 9.59 Reciprocating compressor flexible exhaust support without expansion joint.

recommended when the side thrust does not exceed the lesser value of 300 pounds or the maximum recommended by the engine manufacturer.

9.18.2 Expansion joints

If an expansion joint (bellows-type) (Figure 9.60) is used, it should be mounted on the pipe leg with the largest amount of expansion. Expansion joints are designed for axial loading, can withstand small lateral displacements, and can be damaged and will leak if the lateral displacement is large. Failure is accelerated by exhaust pulses vibrating the pipe.

9.19 Centrifugal pumps

9.19.1 General considerations

A centrifugal pump is a kinetic energy machine converting mechanical energy into hydraulic energy through centrifugal force. A detailed description of centrifugal pumps is discussed in *Volume 4*.

Over 80% of the pumps used in the oil and gas industries are of the centrifugal type. Figure 9.61 shows typical piping and fittings required at a centrifugal pump together with the valves necessary to isolate the pump from the system. The check valve is required to prevent possible flow reversal in the discharge line. A permanent in-line strainer is normally used for screwed suction piping and a temporary strainer

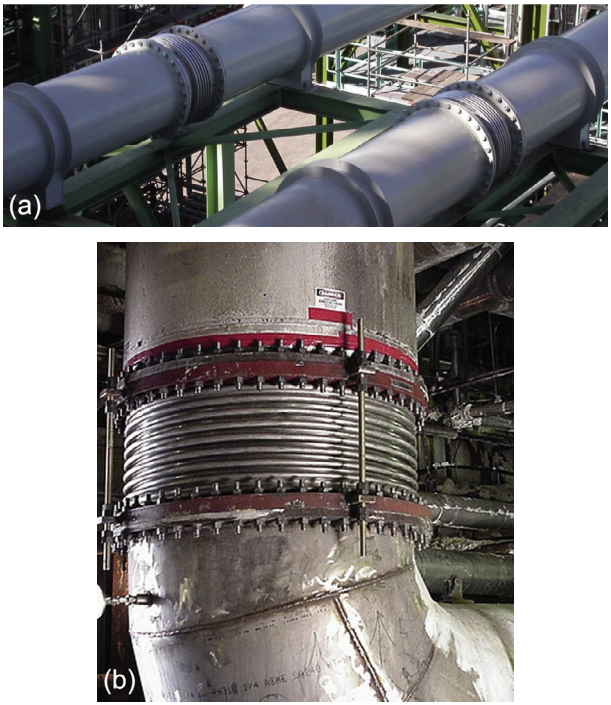

Figure 9.60 Reciprocating compressor exhaust expansion joint (bellows-type).

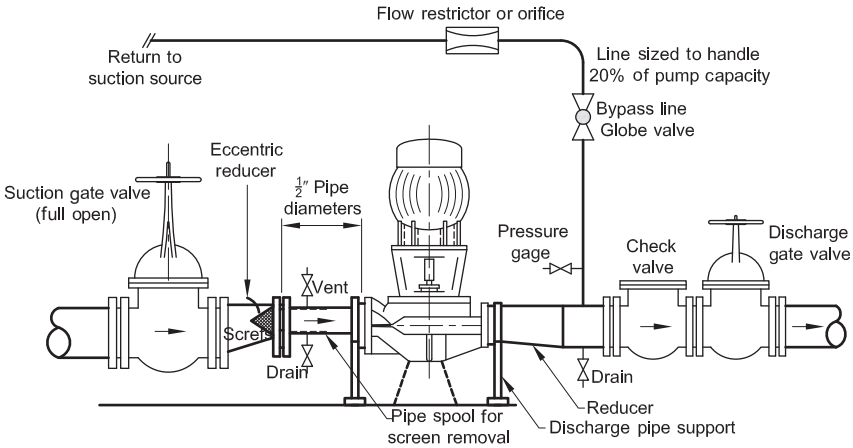

Figure 9.61 Centrifugal pump piping.

for butt-welded/flanged piping. The temporary strainer is installed between flanges. A spool is usually required to facilitate removal.

Most pumps have end suction and top discharge. Limitations on space may require another configuration, such as top suction with top discharge and side suction with

side discharge. The determination of nozzle orientation takes place when equipment layout and piping studies are made.

9.19.2 Suction piping considerations

9.19.2.1 Suction line

To avoid cavitation, the pump should be at the correct elevation, related to the level or head of the liquid being pumped. The suction line is a minimum of one pipe size larger than pump inlet. This minimizes the head losses. Suction lines should consider the following:

Route suction lines as directly as possible. This is done so as not to starve the pump and incur the risk of cavitation.

- If the pump draws liquid from a sump at a lower elevation, provide a combined foot valve and strainer. A centrifugal pump working in this situation requires priming initially. Thus, the designer should provide for this by a valve branch near the inlet port or by other means.
- Provide a strainer in the suction line. Do not place a temporary start-up screen immediately downstream of a valve as debris may back up and prevent the valve from being closed.

9.19.2.2 Suction valve

The suction valve should be a fully open gate valve.

9.19.2.3 Eccentric reducer

The eccentric reducer should be installed with the straight side up. This avoids trapping noncondensing vapors and reduces the potential for cavitation.

9.19.2.4 Piping spool

The piping spool reduces turbulence before entering the pump junction. The removable spool piece should be provided in the piping for strainer removal.

9.19.2.5 Screen

The screen prevents solids from entering the pump. Temporary screens (strainers) should be fitted in all pump suction lines, downstream of the block valve, for start-up operation. Where permanent "Y"-type strainers are installed, one must check clearance for removal of the basket.

9.19.3 Discharge piping configurations

The outlet pipe for centrifugal and other non-positive-displacement pumps is in most cases chosen to be of larger bore than the discharge port, in order to reduce velocity and consequent pressure drop in the line. A concentric reducer or reducing elbow is used in the discharge line to increase the diameter. There is no restriction on the placement of elbows in discharge lines as there is in suction lines.

9.19.3.1 Reducer type

Unlike the suction line, there is no restriction on reducer type (i.e., concentric or eccentric is acceptable).

9.19.3.2 Check valve

The check valve minimizes backflow, which can damage the pump.

9.19.3.3 Bypass to suction

The bypass to suction protects the pump from temperature buildup when the pumping rates are low. The line is designed to handle 20% of the pump's capacity at maximum discharge pressure with a line restrictor to adjust actual flow. For small pumps, the flow rate is usually controlled by an orifice or choke tube. For large pumps, a continuous bypass would consume excessive power; thus, a motor valve activated (opened) by low flow is used.

9.20 Reciprocating pumps

9.20.1 General considerations

Piping features required for centrifugal pumps are also required for reciprocating pumps (Figures 9.62 and 9.63) except the continuous bypass line. Calculations involved in pump piping are presented in the Hydraulic Institute Standards. A detailed discussion on reciprocating pumps is provided in *Volume 4*.

Reciprocating pumps must be protected against overloading due to restriction in the discharge line. If a positive-displacement pump is not equipped with a relief valve by the manufacturer, the designer should provide a relief valve between the pump discharge nozzle and the first valve in the discharge line. The discharge from the relief valve is usually connected to the suction line between the isolating valve and the pump.

Since a reciprocating pump does not greatly change the fluid velocity, reducers and increases may not be required in suction and discharge lines. A reciprocating pump that experiences pulsating discharge may set the piping into vibration. To reduce this vibration, an air chamber should be used downstream of the discharge valve.

9.20.2 Suction piping

Piping should be kept as straight and as short as possible and as large as possible.

9.20.3 Discharge piping

9.20.3.1 Pressure relief valve

A pressure relief valve is required as discharge piping may be subjected to extremely high pressures since the reciprocating pump is a positive-displacement machine. The discharge should be piped back to the suction source.

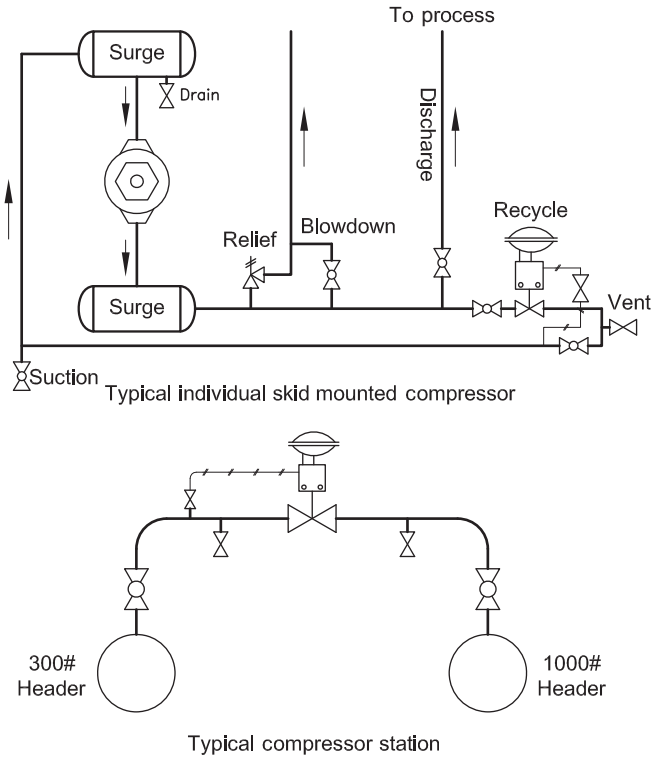

Figure 9.62 Reciprocating pump piping.

9.20.3.2 Start-up bypass

The start-up bypass should be installed on pumps where excessive power is required when started under loaded conditions. This allows the pump to reach operating speed before the load is slowly applied by closing the bypass valve.

9.20.3.3 Vent and drain valves

All pumps, regardless of type, should have vent and drain valves in piping between the block valves. Vents allow the removal of air or gases before starting. Drains allow for the removal of liquids and depressurization before pipe disconnections for maintenance.

9.20.4 Recycle system

The recycle system returns gas from a reciprocating compressor discharge to suction (Figure 9.64). The recycle system avoids compressor shutdown due to low suction pressure. The system design is governed by the type of installation and design objective.

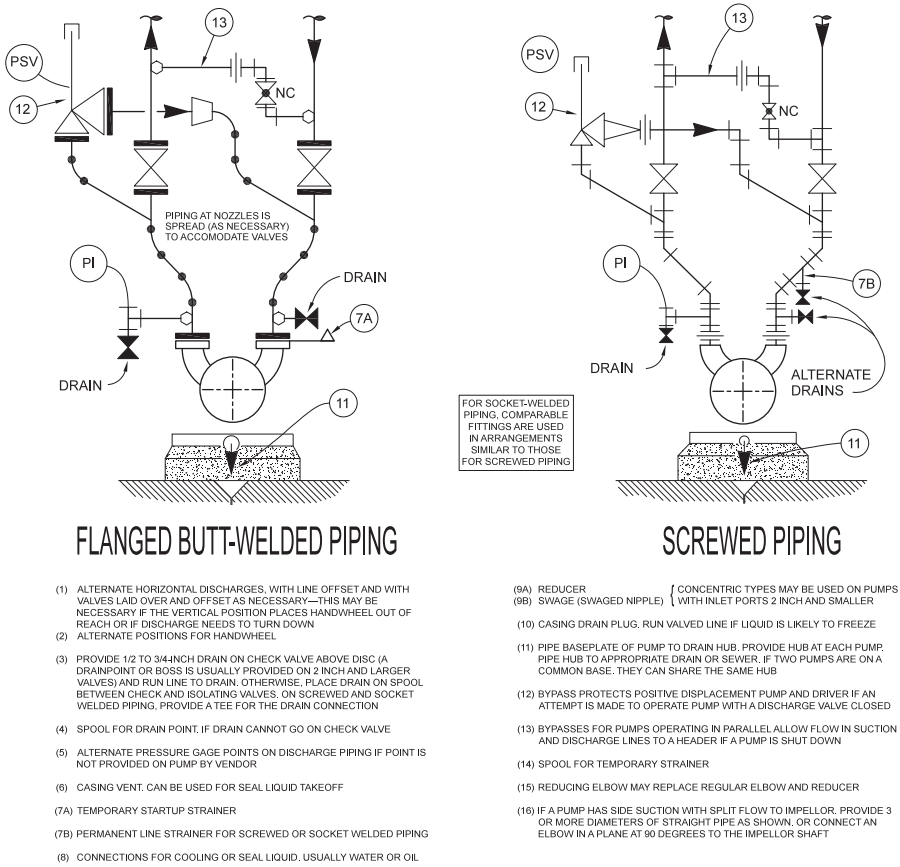

Figure 9.63 Piping for positive-displacement pumps: (a) flanged butt-welded piping; (b) screwed piping.

Multiple services (inlet streams on two or more stages of suction) may require 50 to 75% recycle to prevent station shutdown. The main objective should be to prevent station shut down due to low flow until the operator arrives to restore production or reclear the compressor.

9.20.4.1 Recycle valve

Recycle valves are controlled by downstream pressure. The recycle valve begins to open when the gas available is less than the compression capacity and suction pressure declines. For station recycle systems where multiple compressors are used, evaluation of the potential loss of throughput may indicate a recycle capacity requirement that is lower.

Noise potential should be checked. Noise is due to the high velocity in the downstream piping.

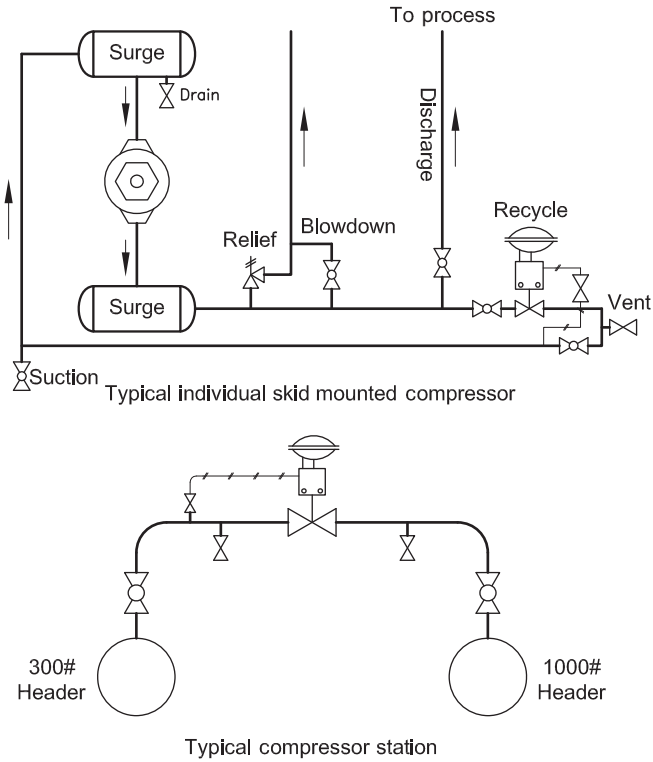

Figure 9.64 Typical recycle system schematic.

Some constant speed reciprocating pumps may also require a 100% recycle or bypass. This provides a device for abnormal operation, provides flow rate control to match short period, low demand, and is piped as a bypass around the pump. The 100% recycle bypass is usually found on high-horsepower pumps where starting loads are so high that start-stop operation is inadvisable.

9.20.4.2 Other equipment

The principles for piping pumps and compressors are applicable to other machines. The pressure loss should be kept low. Piping supports should be provided to control natural frequencies of the piping system and isolate nozzles from piping stresses.

9.21 Storage tanks

9.21.1 General considerations

API 650 establishes the minimum requirements for the design, material, fabrication, erection, and testing for vertical, cylindrical, aboveground, closed- and open-top,

welded carbon, or stainless-steel storage tanks. Tanks come in various sizes and capacities for internal pressures ranging from atmospheric pressure (internal pressures not exceeding the weight of the roof plates), but a higher internal pressure is permitted when additional requirements are met. This standard only applies to tanks whose entire bottom is uniformly supported and to tanks in nonrefrigerated service that have a maximum design temperature of 200 °F (93 °C) or less.

API 620 establishes the design and construction of large, welded, field-erected low-pressure carbon steel aboveground storage tanks (including flat-bottom tanks). This standard does not cover all details of design and construction because of the variety of tank sizes and shapes that may be constructed. When complete rules for a specific design are not given, the intent is for the manufacturer, subject to the approval of the purchaser's authorized representative, to provide design and construction details that are safe as those that would otherwise be provided by this standard.

Storage tanks have different types of roofs, some designed to prevent vapor loss. When storage tanks are located within a tank farm or production facility, they are considered to be "offsite" in that they are remote from the process areas. Tanks are built with dikes so as to provide spillage protection.

9.21.2 Foundations

A properly designed and constructed foundation is required to maintain the structural integrity of a storage tank. For small tanks, earthen foundations may be adequate and may consist of compacted crushed stone, fine gravel, or other similar materials placed directly on undisturbed soil. For large tanks, earthen foundations with concrete ringwalls or crushed ringwalls may be used. For very large tanks or for construction of any tanks in areas or poor soil conditions, ringwalls and more elaborate methods (pile-supported) of foundation construction are required.

9.21.3 Ladders, stairs, and access

Storage tanks must have ladders to provide access to the top. Per API 650, tanks 20 ft. (6 m) or less in height must be furnished with a ladder without a cage. Tanks taller than 20 ft. (6 m) require a spiral stairway. A landing platform at the top of the ladder can lead to walkways extending to the center of the roof. Roofs and shells are provided with manholes that are 2 ft. (60 cm) in diameter. Details on such requirements are covered in API 650.

9.21.4 Tank spacing

The National Fire Protection Association (NFPA) publishes several volumes of recommended practices concerning fire protection. NFPA 30 divides flammable and combustible liquids into three classes depending on their flash point, and provides tables for shell-to-shell spacing, distance from property lines, public ways, or other important buildings. Flammable liquids, Volume 1, should be consulted when determining the spacing between tanks containing flammable liquid such as oil.

9.21.5 Dike design

NFPA establishes minimum dike height and area in Volume 1, Paragraph 2170, for storage of petroleum products. Requirements for earth dikes are usually specified in conjunction with the customer, the authorities having jurisdiction, and NFPA.

Dikes should be sloped to be self-draining to get rid of rainwater, which should be gravity-fed toward catch basins. The slope should be away from the tanks to avoid any metallic corrosion. Earth, concrete, masonry walls, and spill containment areas should be suitable for the static hydraulic and temperature conditions that may be encountered. Piping manifolds should not be located within diked areas. Piping located between roadways and dikes should be provided with crosswalks to facilitate pedestrian traffic from the road to the tank dikes. Pumps should be located outside the diked area, unless a high flash point viscous stock requires the pump to be located within the diked area.

At least one stairway should be provided over earth and concrete dikes; however, at least two stairways should be provided for concrete dikes 3 ft. (1 m) or more high and earth dikes over 6 ft. (2 m) high. When two stairways are provided, they should be on opposite sides of the dike enclosure. At least one stairway should be located near a fire hydrant. Additional stairways should be provided if the escape distance from any point around the tank exceeds 150 ft. (50 m).

9.21.6 Fire protection

9.21.6.1 Foam protection systems

A foam system is usually specified for cone roof tanks. Foam in powder form is mixed with water and forms foam suds. This is done in a foam-mixing unit located inside a foam pump house. The foam is then pumped to foam chambers located at the top of tanks, which are mounted on the inside wall so as to blanket the surface of the tank liquid with foam and snuff the fire.

9.21.6.2 Firewater systems

Hydrants and monitors are placed at intervals around the dike perimeter so that the firefighter can spray water on the fire from a monitor located on the top of the dike.

9.21.7 Offsite piping

Large storage tanks that are located outside the facility, for example, in a tank farm or bulk storage facility, have a tendency to settle on their foundations. Provisions must be made in the adjoining piping to absorb tank settlement. The major concern is that the loads from tank settlement must not be transferred to the pump nozzle and suction piping, which will cause unacceptable high loads and moments.

9.22 Special piping considerations

9.22.1 General considerations

This section discusses special considerations that may be encountered when designing a piping system. These considerations include the following:

- Special piping materials
- Weight coating
- Hot tapping
- Hydrostatic testing

9.22.2 Screw-end pipe

9.22.2.1 Basic considerations

Many monitoring devices for rotating equipment and some utility piping may be screw end. Before using this type of piping connection, the potential failure due to cyclic stress must be carefully considered. The moment of inertia of threaded pipe is very small, and a small vibrating force will result in a large deflection of the pipe. The small wall thickness cross section generally associated with threaded pipe also results in a high bending stress due to the deflection caused by vibration.

9.22.2.2 Vibration considerations

Vibrations can cause deflections of high magnitude if the frequency is near the natural pipe frequency. The national standard pipe thread is a sharp V-type thread that has a severe notch that creates a point of stress concentration. Thread vulnerability to corrosion and wall reduction further reduces the ability of a threaded connection to withstand bending stress. Because of the cycling nature of vibrating stresses, the endurance strength of the connection is extremely important. For example, a butt-welded connection may be loaded to approximately 26,000 psi total longitudinal cyclic stress without failing. The stress concentration caused by threads may reduce the endurance level to approximately 13,000 psi. When the effects of corrosion and wall thickness variations are considered, it may not be advisable to load the pipe to more than 10,000 psi stress.

9.22.2.3 Methods to reduce deflection

In order to reduce the distance from the anchor point (at which the force is applied) to the threaded pipe, the operating monitor valves or other devices should be located as near to the anchor point as possible. This can be accomplished by using a male-female connection valve rather than a female-female valve and nipples. Increasing the moment of inertia of the pipe can be done by increasing the wall thickness at the connection (anchor point).

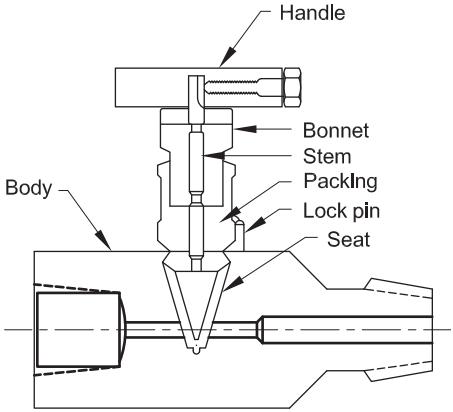

Figure 9.65 High-strength valve with male-female connection.

Figure 9.65 shows valves using a male-female connection with increased wall thickness.

9.22.2.4 Bracing, back-welding, and ground lip unions

9.22.2.4.1 Bracing

Bracing is used to prevent excess stress of the threaded joint. The pipe must be braced to a larger pipe or to the machine. If the pipe must stand alone, the first connection must be kept as close as possible to the machine and supported by the machine or its foundation to lessen differential motion.

9.22.2.4.2 Back-welding and ground lip unions

Back-welding of threaded connections and the use of ground lip unions for breakout connections provide strength approaching that of butt-welded connections. If threaded connections are used and bending moments will be induced, welded braces that will prevent bending stress in the threads should be used.

9.22.3 Special piping materials

9.22.3.1 Plastic pipe

Plastic pipe is used in water services and some oil services and low-pressure gas service. Fiberglass-reinforced thermoset plastic pipe is used in produced and injection water as well as hydrocarbon service. Other plastics are used for freshwater and low-pressure chemical services.

Plastic pipe will not yield and establish a new yield point over a wide stress range like Grade B steel pipe. The design must operate strictly within the recommended pressure and temperature ratings. Plastic characteristics change with time under normal conditions, and long-term installation designs must allow for these changes.

Plastic pipe requires special handling to avoid damage and must be protected from sunlight, mechanical damage, extreme cold, and fire. Plastic pipe offers low resistance to vibration and pressure surging. Plastic pipe is often used in highly corrosive services where its resistance to corrosive environments is vastly superior to steel.

9.22.3.2 Sour fluid piping

Sour refers to fluids containing acid gases such as H_2S and CO_2. When these gases are mixed with water, acids are formed to corrode ferrous materials. No steel having a Brinell hardness greater than 235 (Rockwell C 22) should be used in sour gas service. For the same reasons that hardened metal is not used, pipe that has been cold worked (plastic deformation of metal below the annealing temperature to cause permanent strain hardening) should not be used in sour service.

If the carbon equivalent is too high, then one will end up with excessive hardness in welds. Specifications should limit the carbon equivalent of piping materials to between 0.40 and 0.45 (there is no established standard for what is acceptable). One must use the International Institute of Welding (IIW) formula that is applicable to steels with a carbon content of 0.2% or more. Piping material used in sour service should comply with NACE MR0175 standard.

Note: MR0175 only addresses sulfide stress cracking (SSC) and only metallic materials. It does not address general weight loss corrosion and it does not address nonmetallic materials. As a result, caution is required when ordering materials referencing only NACE MR0175 standard without any additional criteria. For example, a ball valve fully complying with NACE MR0175 standard could quite easily be supplied with carbon steel ball and steam and Buna-N or nylon elastomers. This valve may be quite resistant to SSC but my fail to function.

Carbon dioxide attacks stressed metal, such as the heat-affected area of welds, to a much greater extent than stress-relieved metal. When in contact with water, it forms carbonic acid. Hydrogen sulfide has the added characteristic of causing hydrogen embitterment of steel.

9.22.3.3 Weight coating

9.22.3.3.1 General considerations

The weight of the coating required depends on the excess weight over buoyancy or pseudo-specific gravity desired. The final overall weight per cubic foot depends on the density of the fluid backfill displaced and the external forces acting on the pipe. The density of the fluid backfill on long lines should be determined in the laboratory from soil-water samples taken along the pipeline right of way. Laboratory analysis may result in large savings in the amount of weight coat required. The external forces such as tides and currents should be investigated for each project.

Table 9.8 gives the approximate excess weight and final pipe weight per cubic foot (pseudo-specific gravity) desired for commonly encountered conditions.

Table 9.8 Excess weight and final pseudo-specific gravity desired for pipe weight coating

Pipe location	Excess weight desired (lb/ft.)		Final pseudo-specific gravity desired	
	Unburied	Buried	Unburied	Buried
Protected freshwater lakes	5	12-20	1.10	1.20-1.30
Protected saltwater bays	12	12-20	1.20	1.20-1.30
Marshes or swamps	12	20-25	1.20	1.30-1.40
Lines subject to tides	30	12-20	1.50	1.20-1.30
Small streams and rivers	-	30-60	-	1.50-2.00
Major rivers	-	60-100	-	2.00-2.60
Swift currents or erosion	-	60-100	-	2.00-2.60

9.22.3.3.2 Excess weight method

Excess weight is the weight of the completed pipeline, including weight coat, over and above the weight of the fluid backfill displaced. Equation 9.2 is used to calculate the pounds of concrete required to produce any desired excess weight:

$$W_c = \left(B + W_x - W_p\right)\left(\frac{\rho_c}{\rho_c - \rho_b}\right) \tag{9.2}$$

where

W_c = weight of concrete (lbs/ft.),
B = buoyancy (lbs/ft.),
W_x = excess weight desired (lbs/ft.),
ρ_c = density of concrete (lbs/ft.^{3}),
ρ_b = density of backfill (lbs/ft.).

Buoyancy of pipe and wrap can be obtained from Appendix 6, Table 3, for three different conditions. The weight of pipe is given in Appendix 4, Table 1 and the weight of the pipe wrap is given in Appendix 6, Table 4. The term $\left(\frac{\rho_c}{\rho_c - \rho_b}\right)$ is called the "factor of effectiveness" and is read directly from Appendix 6, Chart 5. Appendix 6, Table 6, includes the weight of standard or barite concrete required to produce a negative buoyancy of 20 pound excess weight in three different densities.

Example 9.1 *Weight coating using the excess weight method*

Problem:

What will be the weight coat required to provide a 20 lb/ft. excess buoyancy for a 6 in. Schedule 40 pipe that will be buried in freshwater? The density of the concrete is 40 lb/ft.^{3}.

Solution:

$$W_c = \left(B + W_x - W_p\right)\left(\frac{\rho_c}{\rho_c - \rho_b}\right)$$

$$B = 16.69\,\text{lb/ft.}$$

$$\text{Pipe } OD + \text{wrap} = 7 \text{ in. (Appendix 6, Table 4)}$$

$$W_x = 20 \text{ lb/ft.}$$

$$W_p = 18.98 \text{ lb/ft. (Appendix 4, Table 1)} + 1.43 \text{ lb/ft. (Appendix 6, Table 4)}$$

$$\left(\frac{\rho_c}{\rho_c - \rho_b}\right) = 2.38 \text{ (Appendix 6, Chart 5, water)}$$

SG = 1.30 (Figure 9.66)

$W_c = [16.69 + 20 - (18.98 + 1.43)]\ [2.38]$

$= 38.75$ lb/ft.

9.22.3.3.3 Specific gravity method

If the desired final specific gravity is known, the weight of concrete can be calculated from the following equation:

$$W_c = \mathrm{SG_p}B - W_p\left[\frac{\rho_c}{\rho_c - \left(\mathrm{SG_p}62.45 \text{ lb/ft.}^3\right)}\right] \tag{9.3}$$

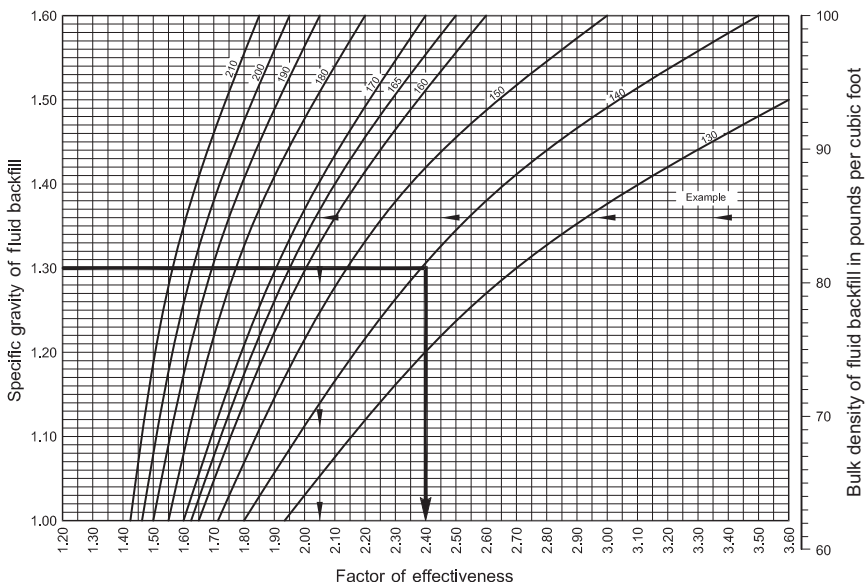

Figure 9.66 Factor of effectiveness of concrete submerged in fluid backfill.

where

W_c = weight of concrete (lbs/ft.),
B = buoyancy (lbs/ft.) (Appendix VI, Table 3),
W_p = weight of pipe and coating (lbs/ft.),
ρ_c = density of concrete (lbs/ft.^{3}),
SG_p = specific gravity of pipe (dimensionless).

SG_p term can be obtained by multiplying the buoyancy, B, in Appendix 6, Table 3, by the desired specific gravity, SG_p. The value of SG_p is read directly by substituting the specific gravity desired for the specific gravity of the fluid backfill (Appendix 6, Chart 7). The weight of the pipe and wrap is also shown in Appendix 4, Table 1 and Appendix 4, Table 4.

The term $\frac{\rho_c}{\rho_c - (SG_p 62.45)}$ can be read as the factor of effectiveness (Appendix 6, Chart 5) by substituting the specific gravity desired for the specific gravity of the fluid backfill.

Example 9.2 *Weight coating using the specific gravity method*

Problem:

What is the weight coating required for a 14 in. Schedule 40 gas line to be buried in a freshwater river? The final gravity desired is 1.4 and 190 lb/ft.^{3} barite concrete coating will be used.

Solution:

$$W_c = (SG_p B - W_p)\left[\frac{\rho_c}{\rho_c - (SG_p 62.45)}\right]$$

$$\begin{aligned} SG_p B &= 1.4(72.23 \text{ lb/ft.}) \text{ (Appendix 6, Table 3)} \\ &= 101 \text{ lb/ft.} \end{aligned}$$

$$W_p = 63.45 \text{ lb/ft. (Appendix 4, Table 1)} + 2.98 \text{ lb/ft. (Appendix 6, Table 4)}$$

$$\frac{\rho_c}{\rho_c - (SG_p 62.45)} = 1.98 \text{ (Appendix 6, Table 5)}$$

$$W_c = (101 - (63.4 + 2.98 - 1.98) = 68.55 \text{ lb/ft.}$$

9.22.3.3.4 Cost

Barite concrete costs about 1½ times as much as ordinary concrete. It is used to keep thickness below 3 in. when large weights must be added. Due to its greater density, it is sometimes cheaper than ordinary concrete because of the lower volume required. A barite job is cheaper than a regular concrete job. The factor of effectiveness for regular concrete is more than 1½ times the factor of effectiveness of barite concrete. The relationship is applicable in 140 and 190 lb/ft.^{3} concrete when the desired final specific gravity exceeds 1.45.

9.22.4 Hot tapping

A number of hot tapping machines are available in various sizes with various drives. Figure 9.67 shows a schematic of a hot tapping machine with hydraulic or air drives. Figure 9.68 shows the actual cutting mechanism at the lower end of the machine. If it is necessary to plug or reroute a line, a plugging or STOPPLE machine is used (Figure 9.69).

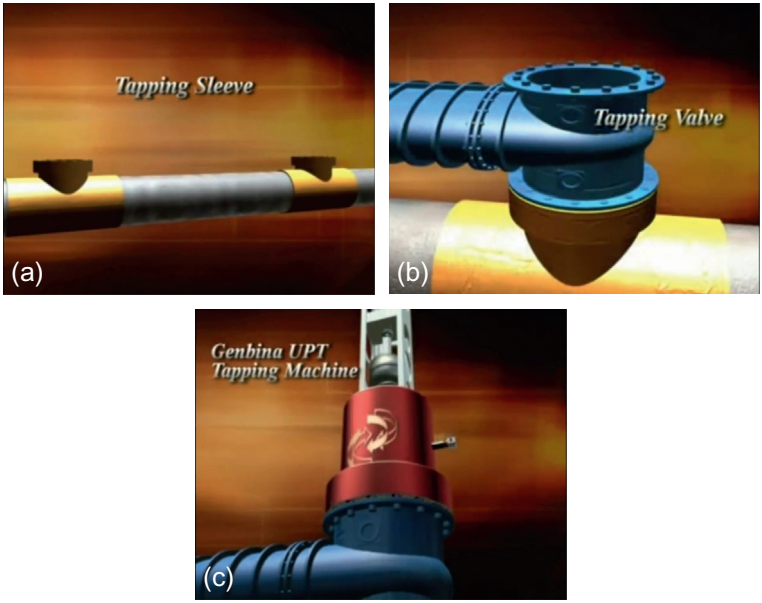

Figure 9.67 Hot tap machine
(Courtesy of T.D. Williamson, Inc.).

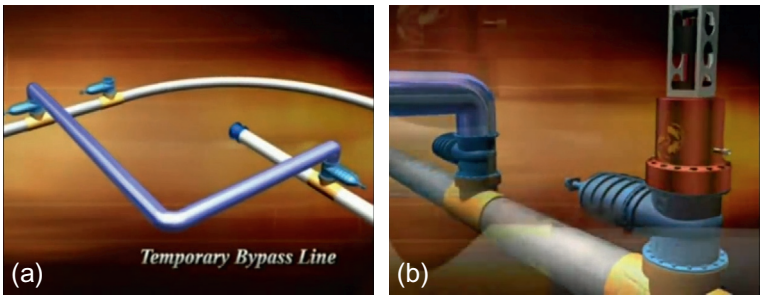

Figure 9.68 Hot tap cutting mechanism.

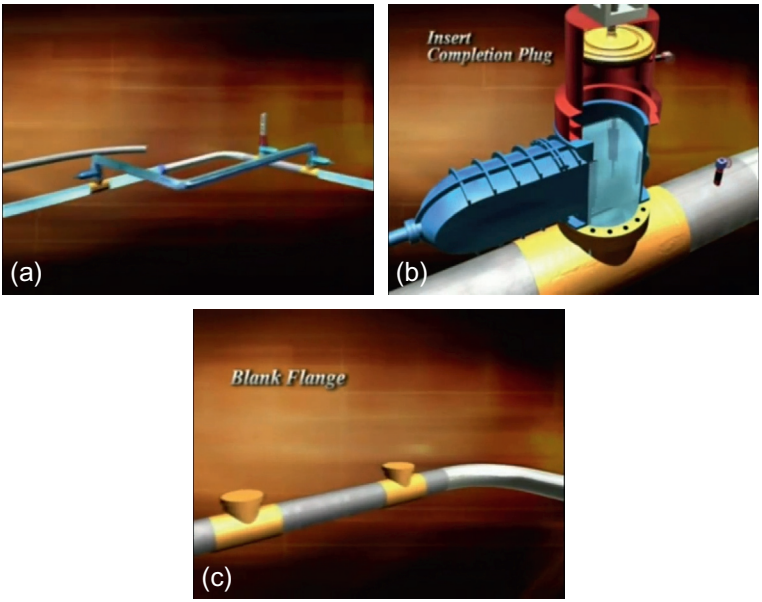

Figure 9.69 STOPPLE plugging machine (Courtesy of T.D. Williamson, Inc.).

Hot tapping an oil or gas line is a specialized operation and should not be started without a comprehensive job plan. There are many clever hot work methods to accomplish almost any task. Human safety factor and monetary risk must be assessed first, and contingency plans developed for failure of each element in the potential work plan. The first question must always be: "Is the work a good risk and can it be accomplished safely?".

If the potential profits warrant the risk, then the following considerations should be reviewed:

- Can a satisfactory weld be made? Can it be made safely?
- Can it be made within the framework of the codes applicable to the work?
- Can the area be made safe for work? Can public interest be protected?
- Will product contamination occur within the pipe?
- Is tapping equipment available for the job?
- Is there a satisfactory contingency for each failure that can occur in the process?

In order to create an adequate job plan and to conduct a safe hot tap, the following factors must be known about the pipe that the branch connection is to be made:

- Material composition of the pipe
- Grade of the material
- Wall thickness of the pipe
- Operating pressure and temperature
- Size of the pipe
- Fabrication method of the pipe

9.22.4.1 ASME B31.3 considerations

All hot tap calculations should be in accordance with this code. Hot taps should not be performed on pipes with less than 0.25 in. wall thickness.

9.22.4.2 ASME B31.8 considerations

For hot tap calculations that do not meet ASME B31.3 wall thickness requirements and the line is under the jurisdiction of ASME B31.8, engineers should seek guidance from their supervisor.

9.22.4.3 Application

With the job plan data discussed previously, a determination can be made on whether the guidelines set forth in ASME B31.3 will result in a safe hot tap. For straight pipe under internal pressure, Section 304.1.2 of ASME B31.3 states that "the internal design thickness, t, shall not be less than that calculated by Equation 9.4."

When $t < D/6$,

$$t = \frac{PD}{2(SE + PY)} \tag{9.4}$$

where

t = pressure design thickness (in.),
P = internal pressure (psig),
D = outside diameter of pipe (in.),
S = allowable stress (psi),
E = longitudinal weld joint factor,
Y = coefficient for ductile ferrous material (Table 9.9).

When $t \geq D/6$ or $\frac{P}{SE} > 0.385$ requires special considerations and is beyond the scope of this section. Figure 9.70 shows the factors involved and the calculation used when the actual wall thickness cannot be measured.

Ultrasonic thickness detectors are used to measure the actual wall thickness. This eliminates the risk that corrosion or mill tolerance has been excessive. Accuracy is within ±0.003 in.

The allowable stress, S, is dependent upon the temperature of the metal. As the temperature increases, the allowable stress decreases. For pipe wall thicknesses greater than 0.188 in., a metal stress at 500 °F can be used if flow is maintained during welding to remove heat from the area. For thinner wall pipe, special considerations are necessary. For example, the 500 °F factor recommended for the allowable stress would be applicable for all lines operating less than 100 °F. For all operating temperatures greater than 100 °F, the operating temperature minus 100 °F plus 500 °F should be used as the applicable stress allowable temperature.

Table 9.9 Values of coefficient "*Y*" when "*t*" is less than *D*/6 (Courtesy of ASME)

Materials	Temperature, °F (°C)					
	900 (485) and lower	950 (510)	1000 (560)	1050 (560)	1100 (595)	1150 (620) and higher
Ferritic steels	0.4	0.5	0.7	0.7	0.7	0.7
Austenitic steels	0.4	0.4	0.4	0.4	0.5	0.7
Other ductile metals	0.4	0.4	0.4	0.4	0.4	0.4
Cast iron	0.0	-	-	-	-	-

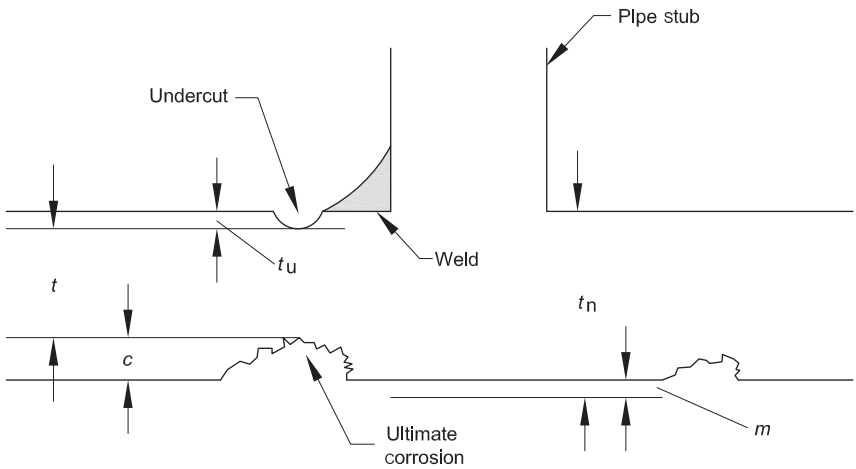

Figure 9.70 Schematic of the factors used in wall thickness calculations.

Example 9.3 *Hot tap calculation: B31.3 location*

Problem:
A gas line within a production facility requires an extension. To accomplish this, the line may be hot-tapped. Can the line be safely hot-tapped given the following conditions?

Corrosion allowance = – 1/20 in.
Operating pressure = 1000 psig at 80 °F
Pipe = 8 in. Schedule 80 ASTM A53 Grade B seamless

Solution:

(1) Calculate the required wall thickness of the pipe using the equation in ASME B31.3, Section 304.1.2:
$P = 100$ psig
$D = 8.625$ in.

$S = 18{,}900$ psi (B31.3 Appendix A, ASTM A53 Grade B seamless)
$E = 1.0$ (seamless pipe)
$Y = 0.4$ (Table 9.9)

$$t = \frac{(1000\ \text{psig})(8.625\ \text{in.})}{2[(18{,}900\ \text{psi})(1.0) + (1000\ \text{psig})(0.4)]} = 0.223\ \text{in.}$$

(2) Determine the available wall thickness:
Wall thickness of 8 in. Schedule 80 = 0.500 in.
Less 12.5% mill tolerance = −0.063 in.
Less 1/16 in. undercut = −0.063 in.
Less corrosion allowance = −0.050 in.
Allowable thickness = 0.324 in.
0.324 in. > 0.223 (thus, the tap can be performed safely)

Example 9.4 *Hot tap calculation: B31.8 location*

Problem: Can a field gas line be safely hot-tapped given the following conditions?

Pipe = 6 in. Schedule 80 ASTM A53 Grade B seamless
Corrosion allowance = 1/20 in.
Operating pressure = 1200 psig at 150 °F
Ultrasonic survey = 0.210 in.

Solution:

(1) Calculate the required thickness of the pipe using the equation in ANSI B31.3, Section 304.1.2:
$P = 1200$psig
$D = 6.625$ in.
$S = 18{,}100$ psi (B31.3 Appendix A, ASTM A53 Grade B seamless) (150 °F − 100 °F + 500 °F = 550 °F)
$E = 1.0$ (seamless pipe)
$Y = 0.4$ (Table 9.9)

$$t = \frac{(1200\ \text{psig})(6.625\ \text{in})}{2[(18{,}900\ \text{psi})(1.0) + (1200\ \text{psig})(0.4)]} = 0.214\ \text{in.}$$

(2) Determine the available wall thickness:
Wall thickness of 6 in. Schedule 80 = 0.432 in.
Less 12.5% mill tolerance = −0.035 in.
Less 1/16 in. undercut = −0.063 in.
Less corrosion allowance = −0.050 in.
Allowable thickness = 0.284 in.
0.210 in. < 0.214 in.

This would not be considered a safe procedure. Recommendation would be to reduce the operating pressure to a safe limit and/or use the ultrasonic survey to find an acceptable location with greater wall thickness.

9.22.5 Hydrostatic testing of stubs

Hydrostatic testing is used to test the strength and leak resistance of the pipe and vessels by internally pressurizing with a test liquid. Test pressure is 1.5 times the pipe design pressure but should not exceed 85% of the pipe's minimum yield.

9.22.5.1 Maximum test pressure

The internal operating pressure must be added to the hydrostatic test pressure so as to determine the maximum test pressure:

$$P_{max} = 1.5P_a + P_o \tag{9.5}$$

where

P_{max} = maximum hydrostatic test pressure (psi),
P_a = calculated value of allowable external working pressure (psi),
P_o = line operating pressure (psi).

9.22.5.2 ASME Code Section VIII, Division 1, Paragraph UG-28

Paragraph UG-28 provides a complete discussion of the pipe external pressure. The following example illustrates a hydrostatic pressure test calculation:

Example 9.5 *Hydrostatic pressure test of a stub*

Problem:

What would be the maximum test pressure applied within a 6 in. Schedule 80 ASTM A53 Grade B seamless stub welded onto a 10 in. Schedule 80 ASTM A53 Grade B seamless pipe operating at 1200 psig and 150 °F?

Solution:

(1) In order to calculate P_a, first determine the values for L/D_o and D_o/t:
L = inside diameter of stub (in.)
D_o = outside diameter of pipe (in.)
t = wall thickness of pipe (in.)

Using the piping tables in Appendix 4, Table 1, = 0.536 in.,

$$\frac{D_o}{t} = \frac{10.75 \text{ in.}}{0.593 \text{ in.}} = 18.13 \text{ in.}$$

For pipe having D_o/t, less than 10, refer to the ASME Code, Section VIII, Division 1, Paragraph UG-28.

(2) Determine the value for A:
Using Figure 9.71, $A = 0.04$.

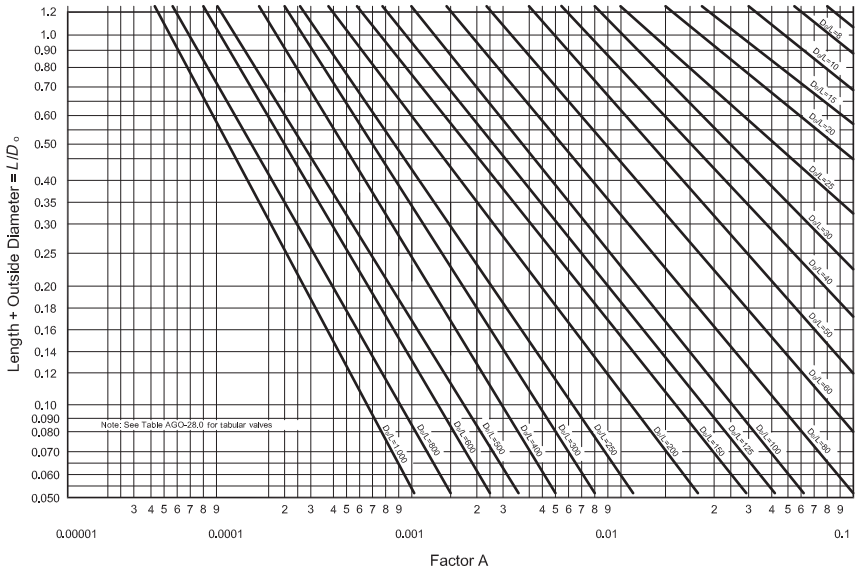

Figure 9.71 Geometric chart for cylinders under external pressure or compressive loadings (Courtesy of ASME).

For L/D_o values greater than 1.2, refer to the code on the upper portion of the chart. If $L/D_o < 0.050$, enter the chart at 0.050.

(3) Determine the value for B.

From ASME B31.3, Appendix A, ASTM A53 Grade B has a minimum yield strength of 35,000 psi. Using Figure 9.72 and projecting up to the 300 °F line horizontally as allowed by the ASME Code, read 17,700.

When constructed of carbon steel or low-alloy steels (specified minimum yield strength 30,000 psi and over except for materials within this range where other specific charts are referenced) and type 405 and 410 stainless steel. For other charts of various pipe materials and minimum yield strengths, refer to the ASME Code.

(4) Determine the allowable external working pressure for the carrier pipe:

$$P_a = \frac{4(B)}{3(D_o/t)}$$

$$= \frac{4(17{,}700)}{3(10.75/0.593)}$$

$$= 1302 \text{ psi}$$

(5) Determine the maximum hydrostatic test pressure for the carrier pipe:

$$P_{max} = 1.5(P_a) + P_o$$

$$= 1.5(1302 \text{ psi}) + 1200 \text{ psi}$$

$$= 3153 \text{ psi}$$

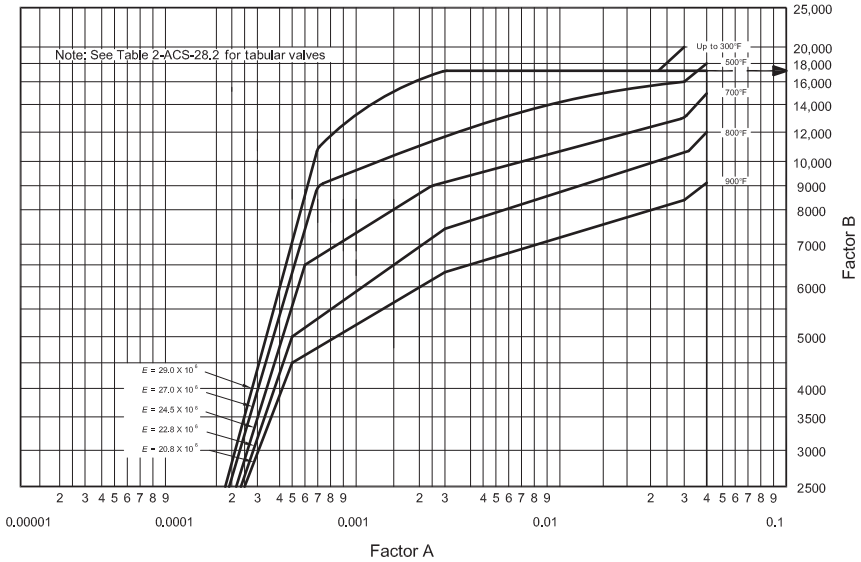

Figure 9.72 Chart for determining shell thickness of a cylindrical and spherical vessel under external pressure
(Courtesy of ASME).

9.23 Review questions

1. The first step in planning a piping system is_____.
   - **a.** locating aerial coolers
   - **b.** sizing the pipe
   - **c.** choosing the facility location
   - **d.** selecting a contractor
   - **e.** determining the electrical power requirements
2. The second step in planning a piping system is _____.
   - **a.** checking the prevailing winds
   - **b.** clearing the site
   - **c.** locating the major items of equipment
   - **d.** locating suitable fill material
   - **e.** obtaining permits
3. Undesired piping intersections are avoided by_____.
   - **a.** piping lines that cross at different elevations
   - **b.** keeping all piping parallel
   - **c.** laying some pipes flat and others underground
   - **d.** all of the above
   - **e.** “a” and “b” only
4. Open drain systems _____.
   - **a.** are located at the highest elevation of all piping planes
   - **b.** must be laid with flat turns to prevent the formation of traps

c. operate at atmospheric pressures
d. operate at high pressures
e. "a," "b," and "c" only

5. Process and utility piping turns must also_____.
a. include a change in elevation
b. include anchor blocks
c. be identified by red concrete
d. be kept parallel
e. be buried at least 3 ft.

6. Piping must be spaced to _____.
a. prevent damage to the coating
b. allow space for future connections
c. minimize the width of pipe racks
d. all of the above
e. "a" and "b" only

7. Hot and cold lines should be laid in different trenches to _____.
a. avoid melting pipe coating
b. prevent expansion
c. avoid undersized heat exchange
d. prevent intersection
e. slow the corrosion process

8. Anchor blocks are used to _____.
a. keep pipe bents from rising out of the ground
b. control the direction of a pipe's thermal growth
c. prevent thermal growth of the pipe
d. relieve pipe stresses
e. support return bends

9. The purpose of manifolds is to_____.
a. combine several flows into a single stream
b. provide a place to measure flow
c. provide a means for distributing flow to several items of equipment
d. all of the above
e. "a" and "c" only

10. Manifold support must be adequate to _____.
a. maintain uniform alignment
b. prevent stress caused by differential settling
c. prevent header warping
d. all of the above
e. "a" and "b" only

11. Vessel risers must be supported from the ground to prevent _____.
a. stressing the nozzles
b. thermal stress
c. interference with other piping
d. foundation shifting
e. "a" and "b" only

12. Pipe support for tower risers requires_____.
a. support from the vessel
b. lateral and vertical bracing
c. that the ground supports the five feet or more below-grade

d. all of the above
e. "a" and "b" only

13. Vessel manual drains should be equipped with both a block valve and blowdown (globe) valve if _____.
a. the vessel is a scrubber
b. the vessel is part of a treating facility
c. the vessel operates at 50 psig or greater
d. the vessel is part of a process stream that must remain in continuous service at 100 psig or greater pressure
e. all of the above

14. Vessels containing replaceable filter elements must _____.
a. have backwashing facilities
b. be equipped with block and bypass valves if a spare vessel is not provided
c. have a spare vessel for use when changing filters
d. be piped from below
e. "c" and "d" only

15. Bypass piping is advisable for_____.
a. multiple-unit heat exchangers in parallel
b. primary separators
c. control valves
d. all of the above
e. "b" and "c" only

16. Heat exchanger inlets should be piped from below when_____.
a. the inlet piping is belowground
b. the exchanger is counterflow
c. there are noncondensing vapors in the flow stream
d. the vessel requires additional weight support
e. "b" and "c" only

17. Heat exchangers should be piped with downward flow when_____.
a. condensation of vapors occur
b. piping is in overhead racks
c. the cold fluid is in the shell
d. the cold fluid is in the tube
e. "a" and "d" only

18. Piping of fired heaters must not_____.
a. block access to explosion, observation, and inspection doors
b. interfere with the removal of headers and tubes
c. have individual lead lines to each burner
d. all of the above
e. "a" and "b" only

19. Safe operation of direct fired heaters requires _____.
a. inlet and outlet isolation block valves to reduce fire damage in the event of tube failure
b. the use of blowdown lines
c. installation of a check valve on the exit flow stream piping
d. a thermal relief valve between the inlet and outlet block valves
e. all of the above

20. Fuel manifolds to fired heaters require _____.
a. spare lines to insure continuous fuel delivery

b. block valves and spectacle blinds in each branch line from the header for more than one heater
c. a condensate drain on the end of the header
d. all of the above
e. "b" and "c" only

21. Control valve loops must contain a bypass_____.
a. to maintain automatic throttling action when the control valve is overloaded
b. to depressurize the line before repairing or replacing the control valve
c. to provide flow control while the control valve is being repaired
d. all of the above
e. "a" and "c" only

22. If a control valve loop must be elevated, it should be _____.
a. braced to the nearest pipe rack
b. pneumatically operated
c. equipped with a service platform
d. insulated
e. designed in accordance with API 5L

23. For a horizontal split-case compressor with top connections, _____ must be installed to permit easy access to the internal parts.
a. expansion loops
b. recycle valves
c. screen strainers
d. pipe spools
e. depressurization valves

24. Centrifugal compressor discharge must have a _____to protect against reverse flow rotor overspeed damage.
a. butterfly valve
b. discharge regulator
c. check valve
d. pulsation dampener
e. Grayloc connector

25. A _____ may be required for a gas turbine downstream of the starter pressure regulator to prevent overpressurization.
a. pulsation dampener
b. seal system
c. relief valve
d. recycle valve
e. flanged connection

26. In steam service, a pipe larger than 2 in. must be _____.
a. butt-welded
b. flange-connected
c. stainless steel
d. all of the above
e. "a" and "b" only

27. If the fuel pressure to a high-speed reciprocating compressor is less than 10 psig, _____ may be required to prevent erratic delivery of fuel gas.
a. two-stage pressure reduction
b. oversized fuel lines
c. two surge bottles

d. all of the above
e. "a" and "c" only

28. For reciprocating compressor lube oil lines, _____.
a. mill scale may be removed by flushing the pipe with an inhibited hydrochloric acid solution
b. they are sometimes placed next to jacket waterlines
c. they may be stainless steel when the line is relatively short
d. all of the above
e. "a" and "b" only

29. Engine jacket waterlines for a reciprocating compressor _____.
a. are routed such that the water enters at the top of the compressor and flows downward
b. must be provided with a vent line if traps are unavoidable on the discharge line
c. are stainless-steel material
d. all of the above
e. "a" and "b" only

30. (True/false) The distance piece vent and the packing vent may use a common header for venting.

31. A _____system may be used in preference to start-stop operation to prevent reciprocating compressor shutdown should low suction flow be encountered.
a. relief
b. recycle or bypass
c. uninterrupted power
d. throttling
e. speed governing

32. To increase the endurance of threaded pipe in vibrating service, the pipe must be _____.
a. braced to a larger pipe
b. back-welded
c. braced to the machine
d. any of the above
e. none of the above

33. Plastic pipe for saltwater injection and hydrocarbon service should be _____.
a. API type and grade
b. steel-reinforced
c. buried
d. fiberglass-reinforced
e. used only in warm climates

34. The following pipe should not be used in sour service:
a. Plastic
b. Steel having a Brinell hardness greater than 235
c. Cold-worked pipe
d. All of the above
e. "b" and "c" only

35. What is the maximum external hydrostatic test pressure for a 4 in. Schedule 40 ASTM A53 Grade B seamless steel stub welded onto a 12 in. Schedule 60 ASTM A53 Grade B seamless pipe? The line operates at 800 psig and 90 °F.
a. 535 psi
b. 750 psi

c. 1924 psi
d. 2360 psi
e. 3056 psi

36. Can an 8 in. Schedule 60 ASTM A106 Grade B seamless gas line be hot-tapped safely with a 4 in. Schedule 80 branch connection of the same material? The line operating pressure is 2000 psig at 80 °F in type B construction. The line is designed according to ASME B31.8. (Hint: Use ASME B31.3 code for hot tap calculation.)
a. Yes
b. No
c. Not enough information given

37. If after performing a hot tap calculation, the available thickness is less than the thickness required, how can the required thickness be reduced?
a. Decreasing the operating pressure
b. Increasing the operating pressure
c. Increasing the temperature
d. Decreasing the wall thickness
e. None of the above

38. Using the excess weight method, what will be the required weight coating to provide a 25 lb/ft. excess weight for a 12 in., Schedule 80 pipe that will be buried in a silt-laden, swampy area? The density of the concrete is 190 lb/ft.^{3}.
a. 10 lb/ft.
b. 15.3 lb/ft.
c. 22.0 lb/ft.
d. 35.6 lb/ft.
e. No weight coating required

39. Using the specific gravity method, what will be the weight coating required to provide a final specific gravity of 1.20? The pipe is unburied in a saltwater bay. The pipe is 20 in., Schedule 40. The concrete density is 140 lb/ft.
a. 28.8 lb/ft.
b. 57.3 lb/ft.
c. 159.7 lb/ft.
d. 183.1 lb/ft.
e. 208.6 lb/ft.

Further Reading

[1] K.E. Arnold, M.I. Stewart, Surface production operations, in: Design of Gas-Handling Systems and Facilities, vol. 2, Elsevier, Boston, Mass, 1999. Chapter 13-Pressure Relief.
[2] K.E. Arnold, M.I. Stewart, Petroleum Engineering Handbook, Facilities and Construction Engineering, vol. III, Society of Petroleum Engineers, Houston, TX, 2007. Chapter 10-Safety Systems.
[3] API Standard 574, Standard Specification for Inspection Practices for Piping System Components, second ed., API, Washington, DC, 1999.
[4] B. Wilson, Detail Engineering and Layout of Piping Systems, second ed., San Francisco, CA, 2010. ISBN 928-1-926633-18-3.
[5] A. Parisher Roy, A. Rhea Bobert, Pipe Drafting and Design, third ed., Gulf Professional Publishing, Houston, TX, 2012.

[6] C. Becht IV, Process Piping: The Complete Guide to ASME B31.3, third ed., ASME Press, New York, 2009.
[7] D.R. Sherwood, D.J. Whistance, The Piping Guide, Syentek Book Company, San Francisco, CA, 1991.
[8] Piping Engineering, Tube Turns Inc., sixth ed., 1986.
[9] L.-C. Peng, T.-L. Peng, Pipe Stress Engineering, ASME Press, New York, 2009.
[10] B. Silowash, Piping Systems Manual, McGraw Hill, New York, NY, 2010.

Pipe expansion and flexibility

10

10.1 Pipe stress considerations

Pipe stress can originate from several sources. To assure safe operation, it is necessary to combine the effects of all forces involved for hot and cold piping. These forces include the following:

- Bending moment applied between supports by the weight of the pipe and the fluid it carries (S_w)
- Stress applied by the internal pressure in the pipe (S_p)
- Bending moment (linear or torsional) applied by displacement resulting from thermal expansion (S_e)
- Bending moment applied by vibrating displacement (normally eliminated by controlling vibration)

In addition of the above pipe stresses, the designer should consider settlement strains. Foundations of large tanks and heavy process equipment may settle or tilt slightly in time. Connected piping and equipment not on a common foundation will be stressed by the displacement unless the piping is arranged in a configuration flexible enough to accommodate multiple-plane movement. This situation should not develop in new construction, but could occur in a modification to a facility unit or process.

The remainder of this section describes the methods to calculate pipe stress. Stresses due to the effects of wind loading and earthquakes are beyond the scope of this material.

10.2 Weight stress

10.2.1 Definition

Weight stress includes the combined effects of live load and dead load.

10.2.2 Live load

The live load consists of the weight of the medium transported. Snow and ice loads should also be considered in locations where such conditions exist.

10.2.3 Dead load

The dead load consists of the weight of the piping components, insulation, and other superimposed permanent loads supported by the piping.

Surface Production Operations. http://dx.doi.org/10.1016/B978-1-85617-808-2.00010-9
Copyright © 2016 Elsevier Inc. All rights reserved.

Example 10.1 *Weight stress calculation*

Given:

A 4 in. (10 cm) Schedule 80 ASTM SA 106B "L"-shaped pipe section is to be installed to transport 50° API gravity oil at 400 °F from a fired heater. The line is 5 ft. (1.5 m) above ground and the installation temperature is 70 °F. The internal pressure of the pipe is 1500 psig. Pipe dimensions are shown in Figure 10.1.

Determine:

Determine the stress due to weight.

Solution:

(1) Determine the weight of pipe:
From the piping tables (Appendix 4, Table 1) for 4 in. Schedule 80 pipe,

$$\text{Pipe weight} = 14.99 \text{ lbs/ft.}$$

(2) Determine the weight of the fluid per foot of pipe:
Converting °API to specific gravity, from piping tables (Appendix 4, Table 1) for 4 in. Schedule 80 pipe,

$$^{\circ}\text{API} = \frac{141.5}{\text{SG}} - 131.5$$

$$50 = \frac{141.5}{\text{SG}} = 131.5$$

$$\text{SG} = 0.78$$

$$\text{Weight of Water} = 4.98 \text{ lbs./ft.}$$
$$\text{Weight of 50° API Oil} = (4.98 \text{ lbs./ft.})(0.78)$$
$$= 3.88 \text{ lbs./ft.}$$

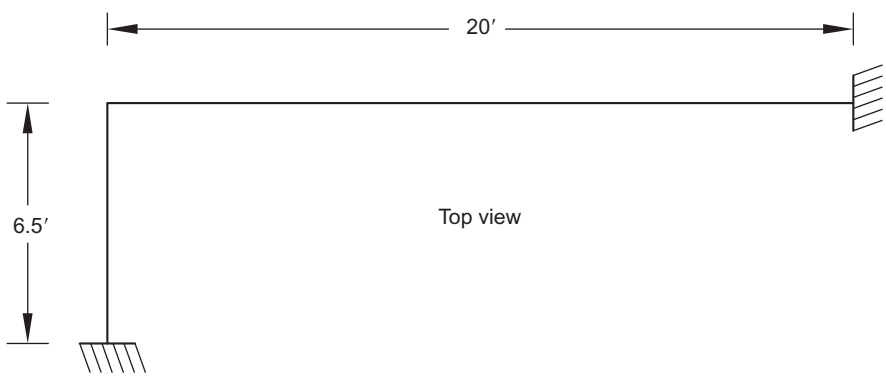

Figure 10.1 Weight stress calculation for "L-shaped" pipe.

(3) Determine the total weight of the pipe and fluid:
To determine the stress, only the longest section of pipe needs to be considered

$$\begin{aligned}\text{Total Weight} &= (14.99\ \text{lbs/ft.} + 3.88\ \text{lbs/ft.})(20\ \text{ft.})\\ &= 377.4\ \text{lbs}\end{aligned}$$

(4) Determine the stress due to weight with both ends restrained.
Stress in the outer fibers of the pipe is expressed as

$$S_{\mathrm{w}} = \frac{M}{Z} \tag{10.1}$$

where
S_{w} = stress in outer fibers (lbs/in.^{3}),
M = bending moment (lbs),

$$= \frac{LW}{12}$$

L = total length of pipe (in.),
W = total weight of pipe section (lbs),
Z = section modulus (in^3).
The section modulus Z is the ratio, L/C, of the cross section of pipe undergoing flexure. It is for the greatest distance of pipe from the neutral axis, C.
On the neutral axis, the forces are zero; however, forces on one side of the neutral axis are of compression and on the other side are of tension.

$$\frac{\pi\left(d^4 - d_i^4\right)}{32d} = \frac{1}{C} = Z \tag{10.2}$$

where
d = outside pipe diameter (in.),
$d_{\mathrm{i.}}$ = nominal inside pipe diameter (in.). Thus, the stress due to weight is

$$\begin{aligned}S_{\mathrm{w}} &= \frac{\dfrac{LW}{12}}{\dfrac{\pi\left(d^4 - d_i^4\right)}{32d}}\\ &= \frac{\dfrac{(20\ \text{ft.})(12\ \text{in./ft.})(377.4\ \text{lbs})}{12}}{\dfrac{\pi\left[(4.5\ \text{in.})^4 - (3.826\ \text{in.})^4\right]}{32(4.5\ \text{in.})}}\\ &= 1767\ \text{lbs/in.}^2\end{aligned} \tag{10.3}$$

Note: Weight stress is only considered when thermal stress is 95% of total allowable stress.

10.3 Internal pressure stress

The stress caused by internal pressure of the pipe also produces a longitudinal stress that must be considered. Example 10.2 illustrates the calculation of stress due to internal pressure.

Example 10.2 *Internal pressure stress calculation*

Given:

Data in Example 10.1

Determine:

Stress due to internal pressure

Solution:

(1) Determine the effective cross-sectional area of the pipe:
From the piping tables (Appendix 4, Table 1) for 4 in. Schedule 80 pipe,

$$OD = 4.5 \text{ in.}$$

$$ID = 3.826 \text{ in.}$$

$$t_n = 0.337 \text{ in. (nominal wall thickness)}$$

The effective pipe wall thickness, t_e, is

$$\begin{aligned} t_e &= t_n - (\text{mill tolerance} + \text{corrosion allowance}) \\ &= 0.337 \text{ in.} - [(0.337 \text{ in.})(0.125) + 0.05 \text{ in.}] \\ &= 0.2449 \text{ in.} \end{aligned}$$

The effective internal diameter, d_{ie}, is

$$\begin{aligned} d_{ie} &= 3.826 \text{ in.} + 2(0.337 \text{ in.} - 0.2449 \text{ in.}) \\ &= 4.01 \text{ in.} \end{aligned}$$

Thus, the effective cross-sectional area is

$$\begin{aligned} A_e &= \frac{\pi (d_{ie})^2}{4} \\ &= \frac{\pi (4.01 \text{ in.})^2}{4} \\ &= 12.63 \text{ in.}^2 \end{aligned} \tag{10.4}$$

(2) Determine the tensile force applied by the pressure:

$$F = PA_e \tag{10.5}$$

where

F = longitudinal tensile force on the pipe (lbs),
P = operating pressure (psig),
A = effective flow area of the pipe (in.^{2}),
substituting

$$\begin{aligned} F &= A_e \\ &= \left(1500 \text{ lbs/in.}^2\right)\left(12.63 \text{ in.}^2\right) \\ &= 18{,}945 \text{ lbs} \end{aligned}$$

(3) Determine the cross-sectional area of the pipe metal that is stressed:

$$\begin{aligned} A &= \frac{\pi\left(d_i^2 - d_{ie}^2\right)}{4} \\ &= \frac{\pi(4.5 \text{ in.})^2 - (4.01 \text{ in.})^2}{4} \\ &= 3.275 \text{ in.}^2 \end{aligned}$$

(4) Determine the unit area stress (S_P):

$$\begin{aligned} S_P &= \frac{F}{A} \\ &= \frac{18{,}945 \text{ lbs}}{3.275 \text{ in.}^2} \\ &= 5.785 \text{ lbs/in.}^2 \end{aligned} \tag{10.6}$$

10.4 Thermal stress

10.4.1 General considerations

Thermal stress may be present in any piping system operating at or occasionally raised to the higher temperatures. Systems may include

- those with high operating temperatures,
- lines that are purged by steam or hot gases,
- closed relief systems and hot blowdown or pump-out systems,
- start-up lines that often vary widely from operating temperatures,
- exchanger bypasses that may still be cold while the inlet and outlet lines are hot, resulting in excessive stresses.

Changes in temperature of piping, due to change in temperature either of the environment or of the conveyed fluid, cause changes in length of the piping. This expansion or contraction in turn causes strains in piping, supports, and attached equipment. The maximum and minimum lengths of a pipe run will correspond to the temperature

CLEARANCES & DIMENSIONS

MINIMUM CLEARANCES		
HORIZONTAL	Operating space around equipment *	2ft 6in.
CLEARANCES:	Centerline of railroad to nearest	
	obstruction: (1) Straight track	8ft 6in.
	(2) Curved track	9ft 6in.
	Manhole to railing or obstruction	3ft 0in.
VERTICAL	Over walkway, platform, or operating area	6ft 6in.
CLEARANCES:	Over stairway Over high point of plant roadway:	7ft 0in.
	(1) Minor roadway	17ft 0in.
	(2) Major roadway	20ft 0in.
	Over railroad from top of rail	22ft 6in.
MINIMUM HORIZONTAL DIMENSIONS		
Width of walkway at floor level		3ft 0in.
Width of elevated walkway or stairway		2ft 6in.
Width of rung of fixed ladder		16in.
Width of way for forklift truck		8ft 0in.
VERTICAL DIMENSIONS		
Railing. Top of floor, platform, or stair, to:	(1) Lower rail	1ft 9in.
	(2) Upper rail	3ft 6in.
Manhole centerline to floor Valves		3ft 0in.

* Equipment such as heat exchangers, compressors and turbines will require additional clearance. Check manufacturers' drawings to determine particular space requirements.

Figure 10.2 Expansion of carbon steel pipe.

extremes to which it is subjected. The amount of expansion or shrinkage in steel per degree change in temperature (coefficient of expansion) is approximately the same; for example, the expansion from 50 to 51 °F is about the same as from 150 to 151 °F. Figure 10.2 provides changes in line length for changes in temperature.

To reduce strains in piping caused by substantial thermal movement, flexible and expansion joints may be used. However, the use of these joints may be minimized by arranging piping in a flexible manner, as illustrated in Figure 10.3. Pipe can flex in a direction perpendicular to its length. Thus, the longer an offset, or the deeper a loop, the more flexibility is gained.

10.4.2 Tube Turn Method®

The Tube Turn Method® offers a simplified and safe approach in determining thermal stresses. Its simplicity, when compared with the vigorous methods available, makes it well suited for use by those who analyze thermal stress problems infrequently. It is best applied to the following groups of single-plane piping configurations:

- Z-, L-, and U-bends with fully fixed terminals, that is, no anchor movement.
- Symmetrical expansion loops, either fixed or guided.
- Guided loops should be symmetrical only with respect to restraints closest to both sides of the loop.
- Straight ends beyond the guides do not have to be equal.

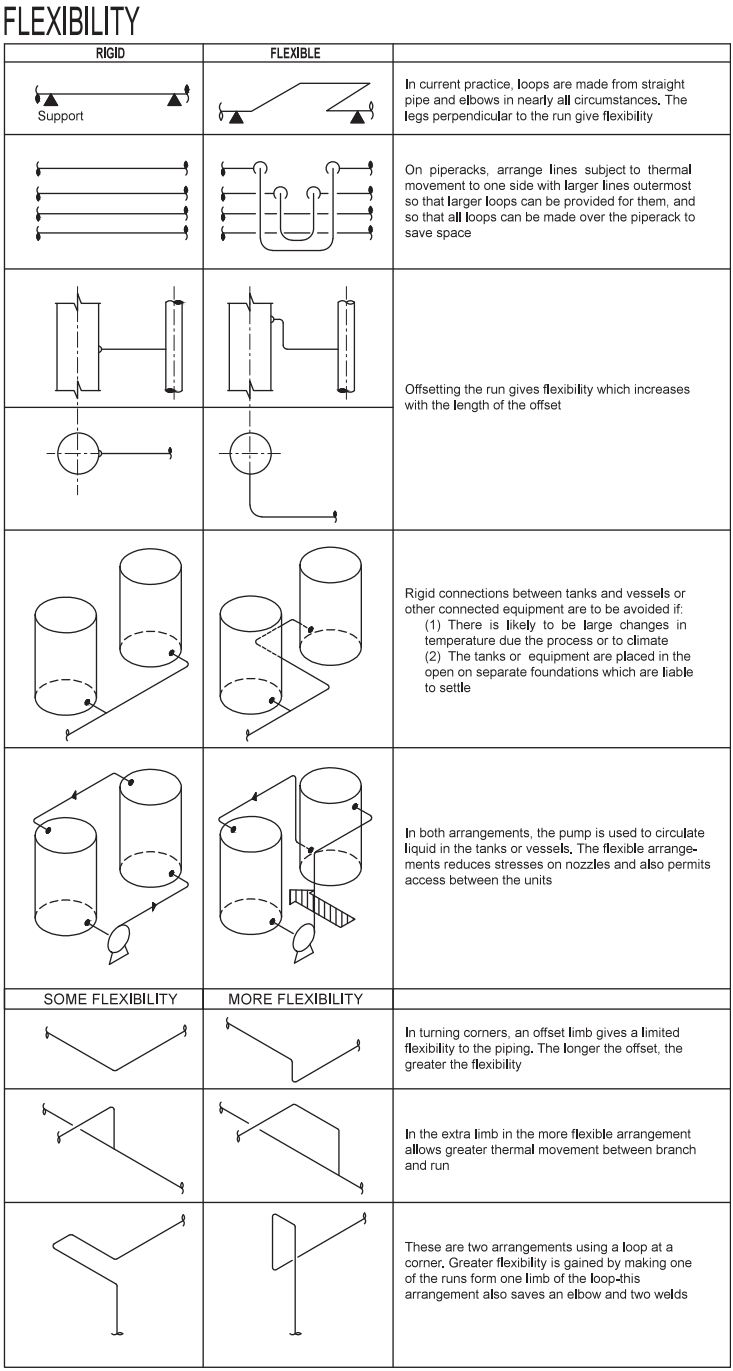

Figure 10.3 Piping arrangements that encourage flexibility.

The Tube Turn Method® provides a reasonably close and usually conservative evaluation of the expansion stress range.

Based on the following equation:

$$S_E = \frac{f_e f_s}{f_L} \tag{10.7}$$

where

S_E = computed expansion stress range (psi),
= using Tube Turns "piping flexibility calculation form 4.02,"
= Figure 10.4,
f_e = expansion factor (psi),
= Appendix 5, Table 5 (algebraic difference of values f_{eh} and f_{ec} read opposite maximum (hot and minimum (cold) metal temperatures; these values are products of the room temperature elasticity modulus and the unit expansion of the pipe material between 70 °F and the maximum metal temperature),
f_s = *shape factor* (ft./in.) that takes into account both the configuration and dimensions of the line axis of a substitute square-corner system,
= factors from Appendix 5, Charts 2, 3, and 4, as applicable to given configuration,
f_l = effective diameter length of line (ft./in.),
= using Tube Turns "piping flexibility calculation form 4.02" as ratio L/D_r, where $L = L_s + nl_r$ = effective line length (ft),
S_a = allowable expansion stress range (psi),
= Appendix 5, Table 5 (computes values in accordance with ASME Code for pressure piping as sum of 1¼ the cold allowable stress S_c and 1/4 the hot allowable stress S_h (see notes to Table 5 for further details)),
L_s = developed length of square-corner system (ft.),
= length of line axis of a substitute system wherein the elbows are replaced by their tangents,
L_r = effective excess elbow length (ft.),
= Appendix 5, Table 1 (provides values applicable to long-radius elbows and formula on which they are based),
N = effective number of elbows for expansion loops,
= Appendix 5, Chart 2 (actual number of elbows is used for all other shapes),
D_r = effective elbow diameter (in.),
= Appendix 5, Table 1 (provides values for long-radius elbows and formula on which they are based),
U = distance between anchors for fixed loops (A),
= between guides or between guide and anchor nearest to loop, for guided loops,
u' = total distance between anchors (ft.).

10.4.3 Stress range

The stress range denotes the range of stress to which the pipe experiences transitioning from its cold to hot condition. For guided expansion loops, the total expansion is corrected by application of a factor u'/u (Figure 10.4). The computed value for S_e must be compared with the allowable, expansion stress range, S_A, for the pipe.

PROCEDURE: (1) Select column applicable to shape (2) Enter given data to right of heavy bars (3) Complete form, referring to designated charts and tables in tube turn "line expansion and flexibility" booklet (4) Compare S_E with S_A

Nom. PIPE SIZE and WEIGHT			Nom. PIPE SIZE and WEIGHT			Nom. PIPE SIZE and WEIGHT			-
Table 1	Eff. ELBOW DIAM.	D_r =	Table 1	Eff. ELBOW DIAM.	D_r = / D_r =	Table 1	Eff. ELBOW DIAM.	D_r = / D_r =	in.
	Eff. ELBOW LENGTH	L_r =		Eff. ELBOW LENGTH	L_r = / L_r =		Eff. ELBOW LENGTH	L_r = / L_r =	ft
General Notes 1. For tables and charts, refer to tubes turns' booklet "line expansion and flexibility" 2. Elbow radius = $1\frac{1}{2}$ x Nominal Pipe size	L-BEND		Z-BEND		U-BEND	SYMM LOOP / GUIDED LOOP			
Length of SHORTER LEG		H =	Length of SHORTER VERTICAL		h = / h =	Extreme ANCHOR SPACING		U' = U / U' =	ft
Length of LONGER LEG		w =	Length of LONGER VERTICAL		H = / H =	Near by RESTRAINT SPACING		U = / U =	ft
			Horizontal OFFSET		w = / w =	Horizontal OFFSET		H = / H =	ft
						WIDTH of LOOP		w = / w =	ft
Chart 3	Enter at ABSCISSA	h/H = O	Chart 3 or 4	Enter at ABSCISSA	h/H = / h/H =	Chart 2	Enter at ABSCISSA	w/H = / w/H =	no.
	Go to curve for	H /w =		Go to curve for	H /w = / H /w =		Go to curve for	H /U = / H /U =	no.
	Read SHAPE FACTOR	f_s = (n=1)		Read SHAPE FACTOR	f_s = (n=2) / f_s = (n=2)		Read SHAPE FACTOR	f_s = / f_s =	ft/in.
							Read Eff. No of ELBOWS	n = / n =	no.
Square -Corner Length H + w =		L_s =	Square -Corner Length H + w =		L_s = / L_s =	Sq -Corner Length U + 2H=		L_s = / L_s =	ft
Sum of Eff. ELBOW LENGTHS		L_r =	Sum of Eff. ELBOW LENGTHS		$2L_r$ = / $2L_r$ =	Sum of Eff. ELBOW LENGTHS		nL_r = / nL_r =	ft
TOTAL Eff. LENGTH $L_s + L_r$ =		L =	TOTAL Eff. LENGTH $L_s + L_r$ =		L = / L =	TOTAL Eff. LENGTH $L_s + nL_r$ =		L = / L =	ft
Eff. DIAMETER LENGTH $\frac{L}{D_r}$ =		f_i =	Eff. DIAMETER LENGTH $\frac{L}{D_r}$ =		f_i = / f_i =	Eff. DIAMETER LENGTH $\frac{L}{D_r}$ =		f_i = / f_i =	ft/in.
PIPE MATERIAL (or Spec.)			PIPE MATERIAL (or Spec.)			PIPE MATERIAL (or Spec.)			-
SERVICE (or Code Section)			SERVICE (or Code Section)			SERVICE (or Code Section)			-
HOT (max) Metal TEMP.		T_h =	HOT (max) Metal TEMP.		T_h = / T_h =	HOT (max) Metal TEMP.		T_h = / T_h =	°F
COLD (min) Metal TEMP.		T_c =	COLD (min) Metal TEMP.		T_c = / T_c =	COLD (min) Metal TEMP.		T_c = / T_c =	°F
Table 5	Read opposite T_h	S_A =	Table 5	Read opposite T_h	S_A = / S_A =	Table 5	Read opposite T_h	S_A = / S_A =	psi
	Read opposite T_h	f_{eh} =		Read opposite T_h	f_{eh} = / f_{eh} =		Read opposite T_h	f_{eh} = / f_{eh} =	psi
	Read opposite T_c	f_{ec} =		Read opposite T_c	f_{ec} = / f_{ec} =		Read opposite T_c	f_{ec} = / f_{ec} =	psi
EXPANSION FACTOR $f_{eh} - f_{ec}$ =		f_e =	EXPANSION FACTOR $f_{eh} - f_{ec}$ =		f_e = / f_e =	EXPANSION FACTOR $f_{eh} - f_{ec}$ =		f_e = / f_e =	psi/psi
COMPUTED EXP. STRESS RANGE. $\frac{f_e f_s}{f_i}$ =		S_E =	COMPUTED EXP. STRESS RANGE. $\frac{f_e f_s}{f_i}$ =		S_E = / S_E =	COMPUTED EXP. STRESS RANGE. $\frac{U'}{U} \times \frac{f_e f_s}{f_i}$ = (U'/U) = 1		S_E = / S_E =	psi

CALC'D :	DATE :	TUBE TURNS, LOUISVILLE, KENTUCKY, PIPING FLEXIBILITY CALCULATION FORM SIMPLIFIED CALCULATION OF L-, Z- AND U-BENDS, AND EXPANSION LOOPS	JOB : / SHEET 4.02-
CHECKED :	DATE :		LINE : / (SINGLE SHEET)

Revised to conform with 1955 Code for Pressure Piping

Figure 10.4 Tube Turns "piping flexibility calculation form". (Courtesy of Tube Turns, Inc.)

Example 10.3 *Shaped pipe section*

Given:

Data in Example 10.1

Determine:

Calculate the expansion stress range

Solution:
Solution is illustrated on the Tube Turns piping flexibility calculation form 4.02 (Figure 10.5).

(1) Determine the effective elbow diameter, D_r, and the effective elbow length, L_r:
From Figure 10.6 (complete table in Appendix 5, Table 5),

$$D_r = 6.75 \text{ in. and } L_r = 2.6 \text{ ft.}$$

(2) Determine the shape factor, f_s:

$$H = 6.5 \text{ ft. (shortest leg)}$$
$$w = 20 \text{ ft. (longest leg)}$$
$$h/H = 0 \text{ (third leg does not exist)}$$
$$H/w = 0.325$$

From Figure 10.7 (complete chart in Appendix 5, Chart 3),

Read $f_s = 1.95$

(3) Determine the total effective length, L, and the effective diameter length, f_L:

$$\begin{aligned}
\text{Square corner length}, L_s &= H + w \\
&= 6.5 \text{ ft.} + 20 \text{ ft.} \\
&= 26.5 \text{ ft.} \\
\text{Total effective length}, L &= L_s + L_r \\
&= 26.5 \text{ ft.} + 2.6 \text{ ft.} \\
&= 29.1 \text{ ft.} \\
\text{Effective diameter length}, f_L &= \frac{L}{D_r} \\
&= \frac{29.1}{6.75} \\
&= 4.311
\end{aligned}$$

(4) Determine the allowable stress for thermal expansion, S_A; expansion factor for the hottest service, f_{eh}; expansion factor for the coldest service, f_{ec}; and the total expansion factor, f_e:
From Figure 10.8 (complete table in Appendix 5, Table 5),

$$S_A = 29{,}300 \text{ psi at } 400\ ^\circ\text{F}$$
$$f_{ec} = 0 \text{ psi at } 70\ ^\circ\text{F}$$
$$f_{eh} = 63{,}000 \text{ psi at } 400\ ^\circ\text{F}$$

PROCEDURE: (1) Select column applicable to shape (2) Enter given data to right of heavy bars (3) Complete form, referring to designated charts and tables in tube turn "line expansion and flexibility" booklet (4) Compare S_E with S_A

General Notes
1. For tables and charts, refer to tubes turns' booklet "line expansion and flexibility"
2. Elbow radius = $1\frac{1}{2}$ x Nominal Pipe size

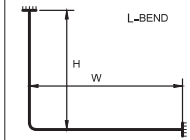

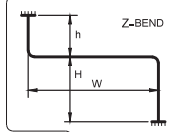

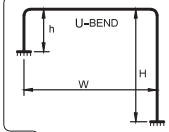

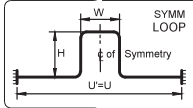

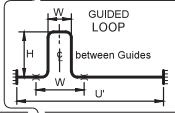

Nom. PIPE SIZE and WEIGHT		4" SCH. 80	Nom. PIPE SIZE and WEIGHT		4" SCH. 80	4" SCH. 80	Nom. PIPE SIZE and WEIGHT		4" SCH. 80	4" SCH. 80	-
Table 1	Eff. ELBOW DIAM.	D_r = 6.75"	Table 1	Eff. ELBOW DIAM.	D_r = 6.75"	D_r = 6.75"	Table 1	Eff. ELBOW DIAM.	D_r = 6.75"	D_r = 6.75"	in.
	Eff. ELBOW LENGTH	L_r = 2.6'		Eff. ELBOW LENGTH	L_r = 2.6'	L_r = 2.6'		Eff. ELBOW LENGTH	L_r = 2.6'	L_r = 2.6'	ft
Length of SHORTER LEG		H = 6.5'	Length of SHORTER VERTICAL		h = 2.5'	h = 4.0'	Extreme ANCHOR SPACING		U' = U	U' = 120'0	ft
Length of LONGER LEG		w = 20.0'	Length of LONGER VERTICAL		H = 4.0'	H = 8.0'	Near by RESTRAINT SPACING		U = 60'	U = 10'	ft
			Horizontal OFFSET		w = 20.0'	w = 20.0'	Horizontal OFFSET		H = 15'	H = 15'	ft
							WIDTH of LOOP		w = 5'	w = 5'	ft
Chart 3	Enter at ABSCISSA	h/H = 0	Chart 3 or 4	Enter at ABSCISSA	h/H = 0.625	h/H = 0.5	Chart 2	Enter at ABSCISSA	w/H = 0.083	w/H = 0.5	no.
	Go to curve for	H /w = 0.325		Go to curve for	H /w = 0.2	H /w = 0.4		Go to curve for	H /U = 0.25	H /U = 1.5	no.
	Read SHAPE FACTOR	f_s = 1.95" (n=1)		Read SHAPE FACTOR	f_s = 0.4 (n=2)	f_s = 1.27 (n=2)		Read SHAPE FACTOR	f_s = 1.09	f_s = 0.115	ft/in.
								Read Eff. No of ELBOWS	n = 4	n = 4	no.
Square -Corner Length H + w =		L_s = 26.5'	Square -Corner Length H + w =		L_s = 26.5'	L_s = 32'	Sq -Corner Length U + 2H=		L_s = 90'	L_s = 40'	ft
Sum of Eff. ELBOW LENGTHS		L_r = 2.6'	Sum of Eff. ELBOW LENGTHS		$2L_r$ = 5.2'	$2L_r$ = 5.2'	Sum of Eff. ELBOW LENGTHS		nL_r = 10.4'	nL_r = 10.4'	ft
TOTAL Eff. LENGTH $L_s + L_r$ =		L = 29.1'	TOTAL Eff. LENGTH $L_s + L_r$ =		L = 31.7'	L = 37.2'	TOTAL Eff. LENGTH $L_s + nL_r$ =		L = 100.4'	L = 50.4'	ft
Eff. DIAMETER LENGTH $\frac{L}{D_r}$ =		f_i = 4.311	Eff. DIAMETER LENGTH $\frac{L}{D_r}$ =		f_i = 4.70	f_i = 5.51	Eff. DIAMETER LENGTH $\frac{L}{D_r}$ =		f_i = 14.9	f_i = 7.47	ft/in.
PIPE MATERIAL (or Spec.)		SA 106 B	PIPE MATERIAL (or Spec.)		SA 106 B	SA 106 B	PIPE MATERIAL (or Spec.)		SA 106 B	SA 106 B	-
SERVICE (or Code Section)		B 31.3	SERVICE (or Code Section)		B 31.3	B 31.3	SERVICE (or Code Section)		B 31.3	B 31.3	-
HOT (max) Metal TEMP.		T_h = 400 °F	HOT (max) Metal TEMP.		T_h = 400 °F	T_h = 400 °F	HOT (max) Metal TEMP.		T_h = 400 °F	T_h = 400 °F	°F
COLD (min) Metal TEMP.		T_c = 70 °F	COLD (min) Metal TEMP.		T_c = 70 °F	T_c = 70 °F	COLD (min) Metal TEMP.		T_c = 70 °F	T_c = 70 °F	°F
Table 5	Read opposite T_h	S_A = 29,300	Table 5	Read opposite T_h	S_A = 29,300	S_A = 29,300	Table 5	Read opposite T_h	S_A = 29,300	S_A = 29,300	psi
	Read opposite T_h	f_{eh} = 63,000		Read opposite T_h	f_{eh} = 63,000	f_{eh} = 63,000		Read opposite T_h	f_{eh} = 63,000	f_{eh} = 63,000	psi
	Read opposite T_c	f_{ec} = 0		Read opposite T_c	f_{ec} = 0	f_{ec} = 0		Read opposite T_c	f_{ec} =	f_{ec} =	psi
EXPANSION FACTOR $f_{eh} - f_{ec}$ =		f_e = 63,000	EXPANSION FACTOR $f_{eh} - f_{ec}$ =		f_e = 63,000	f_e = 63,000	EXPANSION FACTOR $f_{eh} - f_{ec}$ =		f_e = 63,000	f_e = 63,000	psi psi
COMPUTED EXP. STRESS RANGE. $\frac{f_e f_s}{f_i}$ =		S_E = 28,497	COMPUTED EXP. STRESS RANGE. $\frac{f_e f_s}{f_i}$ =		S_E = 53,617	S_E = 14,521	COMPUTED EXP. STRESS RANGE. $\frac{U'}{U} \times \frac{f_e f_s}{f_i}$ = (U'/U) = 1		S_E = 4,609	S_E = 11,639	psi

CALC'D : Herl Wibowo	DATE : 2 - 09 - 2015	TUBE TURNS, LOUISVILLE, KENTUCKY, PIPING FLEXIBILITY CALCULATION FORM SIMPLIFIED CALCULATION OF L-, Z- AND U-BENDS, AND EXPANSION LOOPS	JOB : / SHEET 4.02-
CHECKED : Maurice Stewart	DATE : 3 - 09 - 2015		LINE : / (SINGLE SHEET)

Revised to conform with 1955 Code for Pressure Piping

Figure 10.5 Solution to Example 10.3 using Tube Turns "piping flexibility calculation form."

3	5S	0.083	12.39	10.40
	10S	0.120	9.66	6.70
	40=ST= 40S	0.216	6.23	2.90
	80=XS= 80S	0.300	4.83	1.60
	160	0.438	3.54	0.60
	XX	0.600	3.50	0
3 1/2	5S	0.083	15.36	13.80
	10S	0.120	11.84	8.00
	40=ST= 40S	0.226	7.48	3.80
	80=XS= 80S	0.318	5.76	2.10
4	5S	0.083	18.54	17.80
	10S	0.120	14.36	11.6
	40=ST= 40S	0.237	8.28	4.70
	80=XS= 80S	0.337	6.75	2.60
	120	0.438	5.49	1.5
	160	0.531	4.68	0.80
	XX	0.674	4.50	0.20
5	5S	0.109	21.81	20.50
	10S	0.134	18.91	16.20
	40=ST= 40S	0.258	11.85	7.00
	80=XS= 80S	0.375	8.96	3.90
	120	0.500	7.18	2.20
	160	0.625	5.95	1.20
	XX	0.750	5.56	6.00

Figure 10.6 Enlarged view of Appendix 5, Table 1—effective diameter "D_r" and length "L_r" for long-radius elbows.
(Courtesy of Tube Turns)

Thus, the total expansion factor is

$$\begin{aligned} f_e &= f_{eh} - f_{ec} \\ &= 63{,}000\,\text{psi} - 0\ \text{psi} \\ &= 63{,}000\ \text{psi} \end{aligned}$$

(5) Determine the expansion stress range, S_E:

$$\begin{aligned} S_E &= \frac{f_e f_s}{f_L} \\ &= \frac{(63{,}000\ \text{psi})(1.95)}{4.311} \\ &= 28{,}497\ \text{psi} \end{aligned}$$

Comparing the allowable stress with the stress due to expansion, the piping configuration will withstand the thermal stresses. If the thermal stress is greater than the allowable stress, two options exist:

- Layout modification
- Cold spring

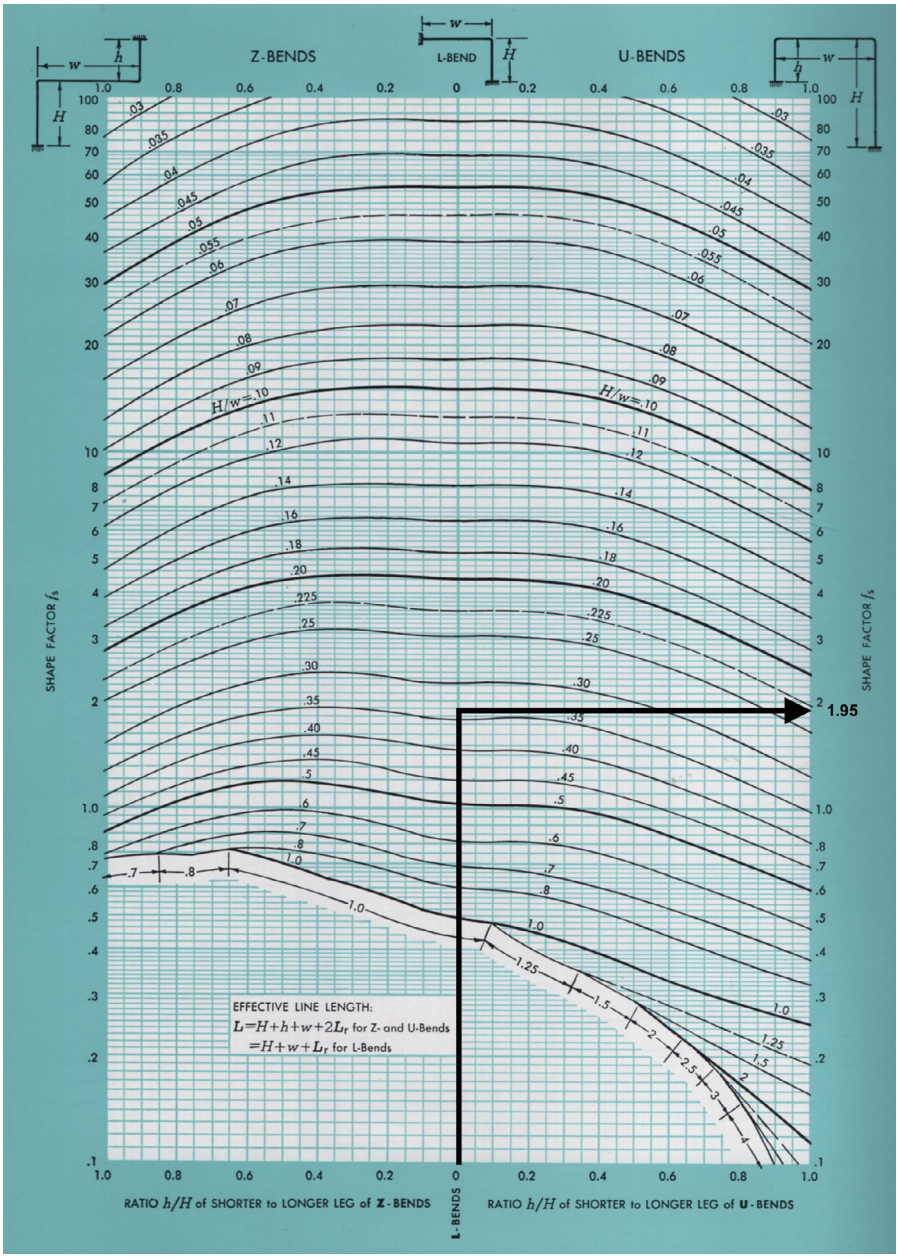

Figure 10.7 Appendix 5, Chart 3—shape factor "f_r" for Z-, L-, and U-bends with small H/w ratios.
(Courtesy of Tube Turns)

10.4.4 Layout modification

If the total stress experienced by a section of pipe exceeds the allowable stress, a layout modification may be necessary. There are a number of means on increasing piping flexibility. Figure 10.4 analyzes a "Z" bend and a "U" bend. The increase in the "Z" bend stress is attributable to an increase in the shape factor. "U" bend has a stress range of approximately 50% of the allowable stress.

PLAIN CARBON STEEL

Metal Temp. T (°F)	Expansion Factor f_e (psi)	Allowable Stress Range S_A (psi) Grade A Carbon Steel Power	Grade A Carbon Steel Oil	Grade B Carbon Steel Power	Grade B Carbon Steel Oil
−20	−14,000	18,000	24,000	22,500	30,000
0	−11,000				
32	−6,000				
70	0				
100	5,000		24,000		30,000
150	14,000		23,900		29,900
200	23,000		23,850		29,800
250	33,000		23,750		29,650
300	42,000		23,650		29,550
350	53,000		23,550		29,450
400	63,000		23,450		29,300
450	73,000		23,350		29,200
500	84,000		23,300		29,100
550	96,000		23,200		29,000
600	107,000		23,100		28,900
650	119,000	18,000	23,000	22,500	28,750
700	131,000	17,900	22,900	22,350	28,600
750	143,000	17,700	22,700	22,000	28,250
800	156,000	17,250	22,350	21,450	27,700
850	169,000	16,800	22,000	20,700	27,150
900	182,000	16,250	21,650	20,000	26,650
950	194,000		21,150		26,150
1000	207,000		20,650		25,650
1025	213,000		20,500		25,500
1050	220,000		20,400		25,400
1075	227,000		20,350		25,350
1100	233,000		20,250		25,250
1125	240,000				
1150	246,000				
1175	252,000				
1200	258,000				

CARBON MOLY and LOW (up to 3%) CHROME MOLY

Metal Temp. T (°F)	Expansion Factor f_e (psi)	Allowable Stress Range S_A (psi) Carbon Moly and ½% Cr ½% Mo Power	Carbon Moly and ½% Cr ½% Mo Oil	Low (up to 3%) Chrome Moly Power	Low (up to 3%) Chrome Moly Oil
−20	−15,000	20,650	27,550	22,500	28,150
0	−12,000				
32	−6,000				
70	0				
100	6,000		27,550		28,150
150	15,000		27,450		28,050
200	25,000		27,350		28,000
250	35,000		27,250		27,900
300	45,000		27,200		27,850
350	56,000		27,100		27,750
400	67,000		27,000		27,700
450	79,000		26,950		27,600
500	90,000		26,850		27,550
550	102,000		26,750		27,500
600	114,000		26,650		27,400
650	127,000		26,600		27,350
700	140,000		26,500		27,250
750	154,000	20,650	26,400		27,200
800	167,000	20,550	26,300	22,500	27,100
850	181,000	20,500	26,250	22,350	26,950
900	195,000	20,300	26,050	22,050	26,550
950	208,000	19,700	25,450	21,500	25,950
1000	222,000	18,750	24,500	20,700	25,000
1025	229,000		24,200	20,400	24,750
1050	236,000		23,950	20,150	24,500
1075	243,000		23,750	19,950	24,300
1100	250,000		23,550	19,750	24,150
1125	257,000			19,650	24,000
1150	263,000			19,500	23,900
1175	270,000				23,800
1200	277,000				23,750

Annealed NICKEL

Metal Temp. T (°F)	Expansion Factor f_e (psi)	Allow. S_A (psi) Oil only
−300	−92,000	15,000
−200	−65,000	
−100	−39,000	
−20	−21,000	
0	−15,000	
32	−9,000	
70	0	
100	6,000	
150	20,000	
200	35,000	
250	50,000	
300	66,000	
350	82,000	
400	98,000	
450	114,000	
500	131,000	15,000

Annealed MONEL

Metal Temp. T (°F)	Expansion Factor f_e (psi)	Allow. S_A (psi) Oil only
−300	−62,000	25,800
−200	−47,000	
−100	−31,000	
−20	−18,000	
0	−13,000	
32	−8,000	
70	0	
100	6,000	25,800
150	16,000	25,700
200	26,000	25,600
250	36,000	25,500
300	47,000	25,400
350	58,000	25,300
400	70,000	25,200
450	81,000	25,200
500	93,000	25,150

Girth or Seam-Welded ALUMINUM

Metal Temp. T (°F)	Expansion Factor f_e (psi)	Allowable Stress Range S_A (psi) 3003-H112 (M1A)	5154-H112 (Gr40A)	6061-T6 (GS11A)	6063-T6 (GS10A)
		Suggested for Power and Oil			
−300	−39,000	5,050	11,000	9,000	6,400
−200	−32,000				
−100	−22,000				
−20	−13,000				
0	−10,000				
32	−5,000				
70	0				
100	4,000	5,050		9,000	6,400
150	11,000	5,000		8,950	6,350
200	18,000	4,900	11,000	8,900	6,300
250	25,000	4,850	10,950	8,850	6,250
300	32,000	4,800	10,800	8,750	6,150
350	39,000	4,700		8,550	6,000
400	47,000	4,650		8,300	5,750
450	55,000				
500	63,000				

Figure 10.8 Appendix 5, Table 5—expansion factor "f_s" and allowable stress range. (Courtesy of Tube Turns)

Continued

MEDIUM (5 to 9%) CHROME MOLY			
Metal Temp. T (°F)	Expansion Factor f_e (psi)	Allowable S_A (psi) 5, 7 and 9% Chrome Moly	
		Power	Oil
− 20	− 14,000	22,500	28,150
0	− 11,000		
32	− 5,000		
70	0		
100	5,000		28,150
150	13,000		28,000
200	21,000		27,900
250	30,000		27,800
300	39,000		27,700
350	48,000		27,600
400	57,000	22,500	27,500
450	67,000	22,450	27,350
500	77,000	22,400	27,250
550	87,000	22,300	27,150
600	97,000	22,250	27,050
650	107,000	22,200	26,950
700	117,000	22,100	26,850
750	128,000	22,050	26,700
800	139,000	21,950	26,550
850	150,000	21,850	26,300
900	161,000	21,500	25,800
950	173,000	21,000	25,200
1000	184,000	20,150	24,700
1025	190,000	19,900	24,550
1050	195,000	19,650	24,300
1075	201,000	19,500	24,200
1100	207,000	19,400	24,050
1125	212,000	19,300	24,000
1150	217,000	19,200	23,900
1175	223,000	19,150	23,800
1200	228,000	19,050	23,750

AUSTENITIC (18 Cr 8 Ni) STAINLESS			
Metal Temp. T (°F)	Expansion Factor f_e (psi)	Allowable S_A (psi) Types 304, 316, 317, 321, and 347	
		Power	Oil
− 20	− 22,000	28,150	28,150
0	− 16,000		
32	− 11,000		
70	0		
100	8,000		28,150
150	21,000		27,850
200	33,000	28,150	27,600
250	46,000	27,900	27,400
300	60,000	27,700	27,200
350	73,000	27,550	27,000
400	87,000	27,400	26,850
450	101,000	27,300	26,700
500	114,000	27,250	26,550
550	128,000	27,200	26,450
600	142,000	27,150	26,350
650	157,000	27,150	26,250
700	171,000	27,150	26,150
750	186,000	27,100	26,050
800	201,000	27,100	25,950
850	216,000	27,000	25,850
900	231,000	26,950	25,800
950	247,000	26,900	25,700
1000	262,000	26,800	25,650
1025	270,000	26,750	25,600
1050	278,000	26,700	25,550
1075	285,000	26,250	25,450
1100	293,000	26,000	25,300
1125	301,000	25,700	25,100
1150	309,000	25,350	24,900
1175	316,000	25,000	24,700
1200	324,000	24,700	24,550

Notes to Allowable Stress Range:

1. *For cyclic services*, i.e. where more than 7000 cycles of major temperature change are anticipated during the life of the system (this corresponds to a daily cycle for a 20-year life), the values of S_A tabulated must be corrected by the stress reduction factors f listed below:

Total Number of Cycles Expected	Reduction factor f
7,000 or less	1.0
14,000	0.9
22,000	0.8
45,000	0.7
100,000	0.6
250,000 or more	0.5

2. *For low-pressure services* or, more strictly, where the sum of the longitudinal stresses caused by pressure, weight, and other sustained loadings remains below the hot allowable stress S_h, the difference may be added to S_A.
3. *For aluminum alloys*, the Code lists S-values only for Alloy 3003-0, and these only in Table 12 applying to oil refinery piping. The allowable stress ranges shown here for Alloys 5154-0 and 6061-T6 are based on S-values given in Cases 1174-2 and 1185 of the ASME Boiler Code Interpretations; those for Alloy 6063-T6 have been similarly derived from across-weld tensile tests and hydrostatic tests of welded assemblies. All values listed may be used for welded piping; they strictly apply to power piping, but it is suggested that they be used equally for other services until more experience has accumulated.
4. *Related alloy steels* have been assigned the same allowable stress ranges where the precisely calculated values differ only by a few percent, a justifiable simplification in the case of an approximate method such as the present.
5. *Specifications and grades* covered by the individual subtables are listed below:

Title of Subtable	ASTM Specifications and Grades
Grade A Carbon Steel	A53, A83, A106, and A139, Gr.A A161 and A192 also API-SL, Gr.A
Grade B Carbon Steel	A53, A106, and A139, Gr.B also API-SL, Gr.B
Carbon Moly and 1/2%Cr1/2%Mo	A209, Gr.T1 A335, Gr.P1 and P2
Low (up to 3%) Chrome Moly	A335, Gr.P3, P3b, P11, P12 and P22
5, 7, and 9% Chrome Moly	A335, Gr.P5, P5b, P5c, P7 and P9
Types 304, 316, 317, 321, 347	A213, A249, A312 (Types as at left) A269 (Types 316 and 317)
Nickel, annealed	B161
Monel, annealed	B165
Aluminum Alloy —	
3003-H112	B241 and B274, Alloy M1A
5154-H112	B274, Alloy GR40A
6061-T6	B241 and B274, Alloy GS11A
6063-T6	B241 and B274, Alloy GS10A
Copper, annealed	B42
Red Brass, annealed	B43
Wrought Iron	A72; also API-SL

Annealed COPPER			
Metal Temp. T (°F)	Expansion Factor f_e (psi)	Allowable Stress Range S_A (psi)	
		Power	Oil
−300	−55,000	9,000	10,050
−200	−40,000		
−100	−27,000		
− 20	−15,000		
0	−12,000		
32	− 7,000		
70	0		
100	5,000	9,000	10,050
150	13,000	8,950	10,000
200	22,000	8,850	10,000
250	31,000	8,800	9,800
300	40,000	8,700	9,600
350	49,000	8,450	9,300
400	58,000	8,250	9,000
450	67,000		
500	76,000		

Annealed RED BRASS			
Metal Temp. T (°F)	Expansion Factor f_e (psi)	Allowable Stress Range S_A (psi)	
		Power	Oil
−300		12,000	12,000
−200			
−100			
− 20	−13,000		
0	−10,000		
32	− 6,000		
70	0		
100	4,000		
150	11,000		
200	18,000	12,000	
250	25,000	11,850	
300	32,000	11,750	12,000
350	39,000	11,250	11,400
400	47,000	10,750	10,750
450	55,000		10,500
500	63,000		

WROUGHT IRON			
Metal Temp. T (°F)	Expansion Factor f_e (psi)	Allowable Stress Range S_A (psi)	
		Power	Oil
− 20	− 19,000	15,000	21,000
0	− 15,000		
32	− 8,000		
70	0		
100	6,000		21,000
150	17,000		20,900
200	28,000		20,800
250	39,000		20,700
300	51,000		20,600
350	62,000		20,550
400	74,000		20,450
450	86,000		20,350
500	98,000		20,250
550	111,000		20,200
600	123,000		20,100
650	136,000	15,000	20,000

Figure 10.8 Continued.

Figure 10.4 also shows an evaluation of thermal stresses experienced by expansion loops. Appendix 5, Chart 2, indicates that the greatest reduction in stress can be accomplished by lengthening the loop legs, but some stress reduction can be realized by increasing the width of the loop. Natural piping configuration should be used to minimize stresses caused by expansion. Anchor points should be carefully located. Expansion loops increase piping pressure loss and material cost, neither of which are desirable.

10.4.5 Cold spring

10.4.5.1 Definition

A cold spring is the deliberate deformation (cutting) of pipe during assembly to offset thermal expansion. Figure 10.9 is a schematic illustrating the cold spring principle. A cold spring may be beneficial in that it serves to balance the magnitude of stress under initial and extreme displacement conditions. When applied properly, there is less likelihood of overstress during initial operation. It is used to reduce loads on equipment; however, it does not affect the strain range. The cold spring does not affect the calculation of the displacement stress range, S_E, or the allowable stress range, S_A.

A cold spring should be avoided if an alternate method can be used. A line may be "cold-sprung" to reduce the amplitude of movement from thermal expansion or contraction in order to

- reduce stress on connections,
- avoid an interference.

10.4.5.2 Application

The cold spring offers another option to altering the desired piping configuration by reducing the stress due to thermal expansion by a specified factor. The cold spring applies to piping systems for four basic reasons:

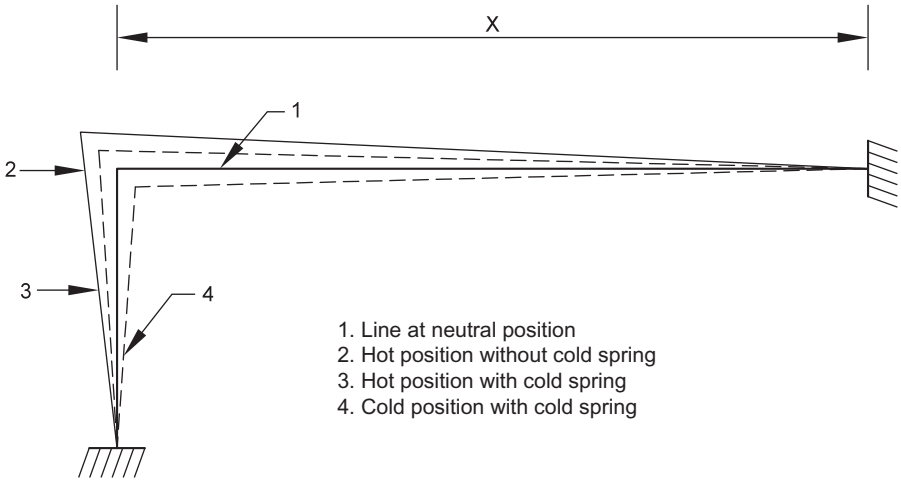

Figure 10.9 Definition of a cold spring.

- When required by detailed stress analysis
  Note: While a cold spring can be used as a result of the detailed stress analysis to reduce the real magnitude of loading on equipment nozzles during operation, it should not be used because the analysis identified that the expansion stresses in the piping system were too large.
- To improve resultant forces and moments although not required by stress analysis
- To maintain adequate spacing
- To correct misalignment

Any small amount of cold spring may be required by stress analysis. Drawings must show the specified amount to the closest 1/16 in. ASME B31.3 permits the use of a cold spring to reduce thrusts and moments; it does not permit credit for cold stress range calculations (i.e., flexibility analysis).

A cold spring may be specified when not mandatory to improve resultant forces and moments such as hot lines connecting to rotating equipment. Cold springs are not specified for less than ¼ in. To maintain adequate pipe spacing in pipe racks and pipe groups, cold spring of 1 in. or more is specified. Normal pipe spacing will allow for more than 2 in. expansion, so cold spring of less than 1 in. is seldom justified. Misalignment correction cold spring is used to improve physical appearances and should never be allowed for less than ¾ in. Normally, this would be used when a line would grow as much as 4-6 in. and might appear out of line with a parallel line.

Cold springs of lines should be avoided if an alternate method can be used. A line may incorporate a cold spring to reduce the amplitude of movement from thermal expansion or contraction in order to reduce stress on connections or to avoid an interference.

The following example illustrates the use of a cold spring to reduce pipe stress: A pipe is connected by a 90° elbow and flange to a nozzle at ambient conditions. Assume, during start-up, the heated process fluid causes an expansion of 1 in. in the pipe, which is in excess of that recommended. As a result, a lateral load of 800 lbs is put onto the nozzle. If 0.5 in. of the pipe expansion length was removed before making the connection, it would result in about 400 lbs (instead of zero), and the hot load would be reduced to about 400 lbs. The fraction of the expansion taken up can be varied. A cold spring of 50% of the expansion between the temperature extremes yields the most benefit in reducing stress. A cold spring is not recommended if an alternate solution can be used. Refer to ASME B31 §319.5.1 Code for guidance.

Example 10.4 *Cold spring on an "L"-shaped pipe section*

Given:

Data presented in Example 10.1
Stress determined in Example 10.3
Assume that the pipe section connects to a centrifugal pump

Determine:

Determine the reduced stress if a 50% cold spring is applied.

Solution:

(1) Determine the growth of the pipe.
The expansion of pipe due to temperature is determined from the following equation:

$$E = \alpha L \Delta T \tag{10.8}$$

where

$E =$ expansion in pipe length due to temperature (ft.),
$\alpha = 6.9 \times 10^6$/°F, coefficient of thermal expansion for carbon steel,
$L =$ length of pipe (ft.),
$\triangle T =$ temperature change experienced by the pipe (°F).

$$E = \left(6.9 \times 10^{-6}\right)(26.5)(400 - 70)$$
$$= 0.06 \text{ ft.}$$
$$= 0.72 \text{ in.}$$

(2) Apply the cold spring.

$$(0.72)(0.50) = 0.36 \text{ in.}$$

This means that the pipe section will be cut 0.36 in. short and the section will be stretched for assembly.

(3) Using Figure 10.10, determine the cold spring factor, $C_e = 0.67$.

(4) Apply the cold spring factor to the stress calculation in Example 10.3.

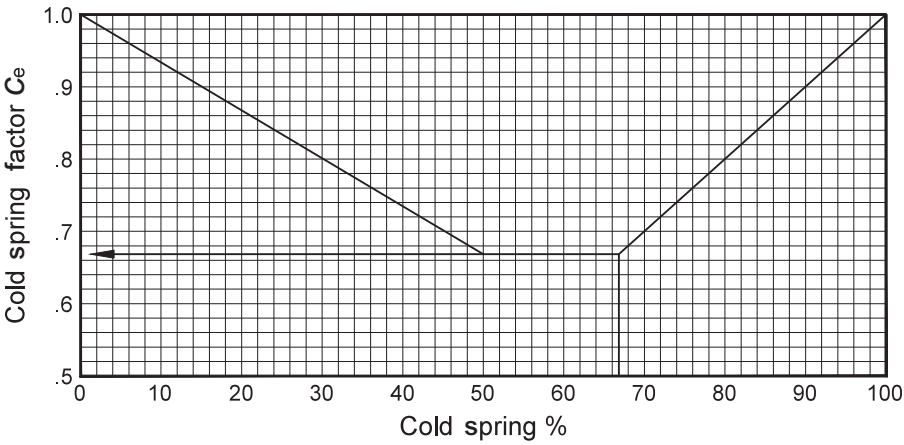

Figure 10.10 Cold spring factor graph.

$$(28{,}497)(0.67) = 19{,}093 \text{ psi}$$

This means that if a 50% cold spring is applied, the stress due to thermal expansion is now reduced to 19.093 psi.

10.5 Requirements for stress analysis

10.5.1 Basic considerations

The requirement for stress analysis should be examined carefully by experienced piping designers. Hot piping that connects to strain-sensitive equipment such as pumps, compressors, and turbines should be closely reviewed for full stress analysis. The ASME B31.3 Code does not indicate when computer stress analysis is required. It is difficult to generalize when a specific piping flexibility problem should be analyzed by computer methods as it depends on the

- type of service,
- actual layout and size,
- severity of temperature.

Some generally agreed upon criteria include the following:

- General piping systems with the following line size/temperature criteria:
  - All DN 50 (NPS 2) and larger lines with a design differential temperature over 500 °F (260 °C)
  - All DN 100 (NPS 4) and larger lines with a design differential temperature exceeding 400 °F (205 °C)
  - All DN 200 (NPS 8) and larger lines with a design differential temperature exceeding 300 °F (150 °C)
  - All DN 300 (NPS 12) and larger lines with a design differential temperature exceeding 200 °F (90 °C)
  - All DN 500 (NPS 20) and larger lines at any temperature
- All DN 75 (NPS 3) and larger lines connected to rotating equipment
- All DN 100 (NPS 4) and larger lines connected to fin fan heat exchangers
- All DN 150 (NPS 6) and larger lines connected to tankage
- Double-wall piping with a design temperature differential between the inner and the outer pipe greater than 40 °F (20 °C)

10.5.2 ASME B31.3 piping code exemptions

B31.3 Code requires a formal flexibility analysis unless certain exemption criteria are met, as provided in §319.4.1. A formal analysis may be performed by using simple graphs or detailed computer stress analysis of the piping system.

A formal flexibility analysis is not required on piping systems that meet one of the following three exemptions:

- A system that duplicates successfully operating installations or replacements without significant change of systems with a satisfactory service record
- A system that can be readily judged adequate by comparison with previously analyzed systems
- A system that is of uniform size and has no more than two points of fall within the limitations of code equation (16):

$$\frac{Dy}{(L-U)^2} \leq K \tag{10.9}$$

where

$D =$ outside diameter of pipe (in. (mm)),
$y =$ resultant of total displacement strains to be absorbed by the piping system (in. (mm)); displacements of equipment to which the pipe is attached (end displacement of the piping system), which should be included,
$L =$ developed length of piping between anchors (ft. (m)),
$U =$ anchor distance, straight line between anchors (ft. (m)),
$K_1 = 30S_A/E_\alpha$ (in./ft.)^2 field units,
$= 208{,}000S_A/E_\alpha$ (mm/m)^2 SI units,
$E_\alpha =$ reference modulus of elasticity at 70 °F (21 °C) ksi (MPa),
$S_A =$ allowable displacement stress range per Equation (1a) of ASME B31.3 ksi (MPa).

The first exemption "grandfathers" a successful design. The problem is trying to determine how long a system must operate successfully in order to demonstrate that the design is acceptable. This is a judgment call left to the designer. The second exemption also relies on the judgment of the designer and is based on his experience. The third exemption uses a very conservative equation. There are a number of warning statements within the code regarding limits to its applicability.

10.5.3 ASME B31.3 Code warning

Warning: "No general proof can be offered that this equation will yield accurate or consistently conservative results. It is not applicable to systems used under severe cyclic conditions. It should be used with caution in configurations such as unequal leg U-bends ($L/U > 2.5$) or near-straight sawtooth runs, or for large thin-wall pipe ($L \geq 5$), or when extraneous displacements (not in the direction connecting anchor points) constitute a large part of the total displacement. There is no assurance that terminal reactions will be acceptably low, even if a piping system falls within the limitation of the equation."

The quick method discussed later in this chapter is a better screening calculation.

Example 10.5 *Determine if formal stress analysis is required using code equation*

Given:

Piping layout in Figure 10.11

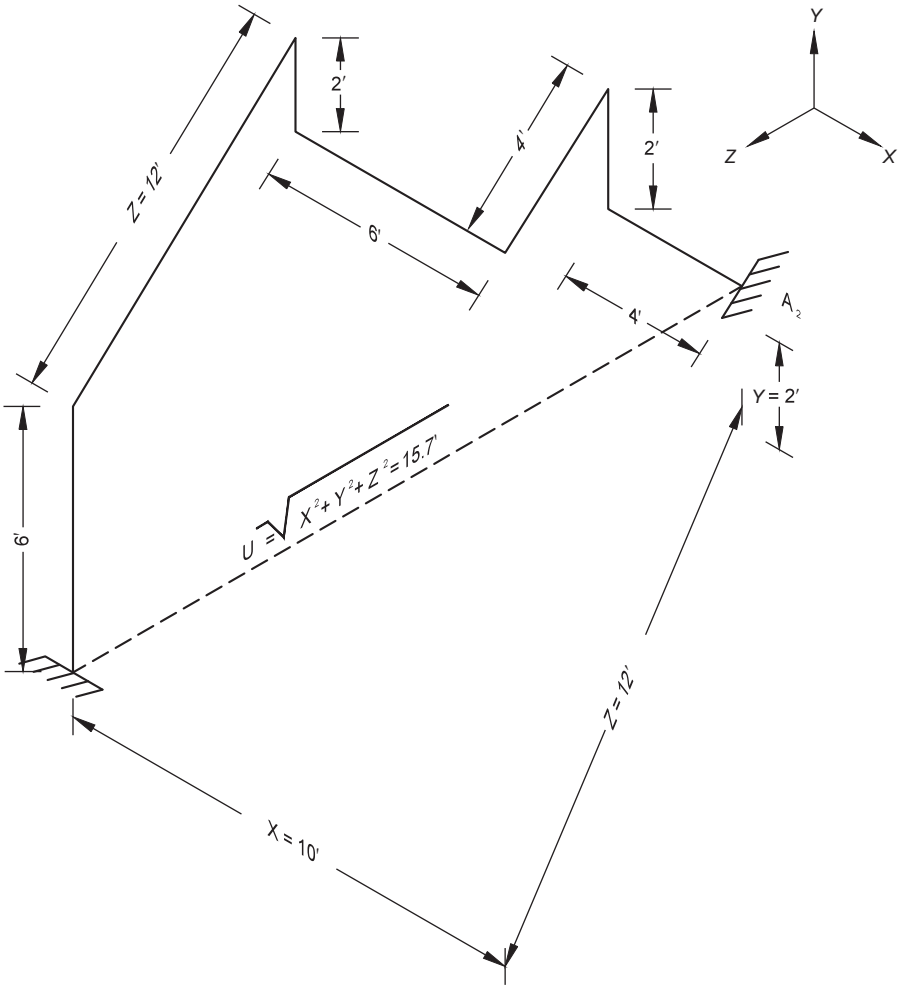

Figure 10.11 Stress analysis requirement.

Determine:

Determine if a formal stress analysis is required for 5 in. Schedule 40 carbon steel pipe. The design temperature is 350 °F.

Solution:

(1) Determine the distance between the anchors:

$$\begin{aligned} X &= \text{total line length to } A_2 \\ &= 6' + 4' \\ &= 10' \end{aligned}$$

$$Y = \text{change in vertical elevation}$$
$$= 6' - 2' - 2'$$
$$= 2'$$
$$Z = \text{Total line length away from } A_1$$
$$= 8' + 4'$$
$$= 12'$$

(2) Determine the length of U, which is the straight-line distance between A_1 and A_2:

$$U = \left(X^2 + Y^2 + Z^2\right)^{1/2}$$
$$= \left(10^2 + (2)^2 + (12)^2\right)^{1/2} \tag{10.10}$$
$$= (248)^{1/2}$$
$$= 15.7 \text{ ft. or } 16 \text{ ft.}$$

(3) Determine the value for Y:

$$Y = Ue \tag{10.11}$$

From Figure 10.12 (Appendix 5, Table 6),

$$E = 2.26 \text{ in. per } 100 \text{ ft.}$$
$$= 0.0226 \text{ in./ft.}$$

Thus,

$$Y = (16 \text{ ft.})(0.0226 \text{ in./ft.})$$
$$= 0.36 \text{ in.}$$

(4) Determine the total length of the piping:

$$L = 6' + 8' + 2' + 6' + 4' + 2' + 4'$$
$$= 32 \text{ ft.}$$

(5) Solve for the stress analysis requirement equation.

$$\frac{Dy}{(L-U)^2} \leq K$$
$$\frac{(5 \text{ in.})(0.36 \text{ in.})}{(32 \text{ ft.} - 16 \text{ ft.})^2} \leq 0.03$$
$$0.007 \leq 0.03$$

Therefore, the piping layout is satisfactory.
When the piping connects to equipment nozzles that expand and contract as temperature changes, the nozzle movement must also be considered and included in the expansion (y) calculations in the direction they occur.

Temperature deg F	Carbon Steel Carbon Moly Low Chrome (thru 3 Cr Mo)
–325	–2.37
–300	–2.24
–275	–2.17
–250	–1.98
–225	–1.85
–200	–1.71
–175	–1.58
–150	–1.45
–125	–1.30
–100	–1.15
–75	–1.00
–50	–0.84
–25	–0.68
0	–0.49
25	–0.32
50	–0.14
70	0
700	0.23
125	0.42
150	0.61
175	0.80
200	0.99
225	1.21
250	1.40
275	1.61
300	1.82
325	2.06
350	2.26
375	2.48
400	2.70
425	2.93
450	3.16
475	3.39
500	3.62
525	3.86
550	4.11
575	4.35
600	4.60
625	4.86
650	5.11

Figure 10.12 Coefficients of expansion.

Example 10.6 *Determine if a formal stress analysis is required for nozzle expansion using code equation*

Given:

Data presented in Example 10.5.
Assume that anchor point A_1 represents an equipment nozzle.
Circumferential expansion (upward) is 5/16 in., and the expansion towards A_2 is 1¾ in.

Determine:

Determine if formal stress analysis is required in this case.

Solution:

(1) Determine the expansion in the X direction:

$$\begin{aligned} e &= 0.0226\,(\text{from Example 10.5}) \\ \sum X &= (10\text{ ft.})(0.0226\text{ in./ft.}) \\ &= 0.226\text{ in.} \end{aligned}$$

(2) Determine the expansion in the Y direction:

$$\begin{aligned} \sum Y &= (2\text{ ft.})(0.0226\text{ in./ft.}) \\ &= 0.0452\text{ in.} \end{aligned}$$

Since A is expanding upward 5/16 in. (0.3125 in.),

$$\begin{aligned} \sum Y &= 0.045\text{ in.} - 0.3125\text{in.} \\ &= -0.2673 \end{aligned}$$

Use 0.2673 in. as this is the net anchor movement.

(3) Determine the expansion in the Z direction:

$$\begin{aligned} \sum Z &= (12\text{ ft.})(0.0226\text{ in./ft.}) \\ &= 0.2712\text{ in.} \end{aligned}$$

Since A is expanding 1.75 in. in the direction of Z,

$$\begin{aligned} \sum Z &= 0.2712\text{ in.} + 1.75\text{ in.} \\ &= 2.0212\text{ in.} \end{aligned}$$

(4) Determine the expansion in direction U:

$$\begin{aligned} y &= \left[\left(\sum X\right)^2 \left(\sum Y\right)^2 \left(\sum Z\right)^2\right]^{\frac{1}{2}} \\ &= \left[(0.226\text{ in.})^2 + (0.2673\text{ in.})^2 + (2.0212\text{ in.})^2\right]^{\frac{1}{2}} \\ &= 2.05\text{ in.} \end{aligned} \tag{10.12}$$

(5) Solve for the stress analysis requirement equation using the new value for y.

$$\begin{aligned} &\frac{Dy}{(L-U)^2} \le 0.03 \\ &\frac{(5\text{ in.})(2.05\text{ in.})}{(32\text{ ft.} - 16\text{ ft.})^2} \le 0.03 \\ &0.04 \ne 0.03 \end{aligned} \tag{10.13}$$

Thus, a formal stress analysis is required.

10.6 Quick check method

10.6.1 General considerations

The quick check method determines whether a piping system is adequately flexible to withstand thermal stress without conducting a full stress analysis. It was presented in the book entitled "Process Piping Vol. 2" by Rip Weaver and complies with industry standards. This method is ultraconservative; thus, when the analysis falls within guidelines, no further analysis is required. It is normally used as a screening calculation and thus can be used with confidence; however, when any questions concerning the adequacy of the analysis exist, the more rigorous computer programs should be used.

10.6.2 Application

This quick check method determines the minimum lengths for various piping shapes. Piping shapes have unique equations for determining whether a particular piping shape meets the required flexibility. The terms and their definitions are included in Figure 10.13.

Symbol Definition*
F = force = pounds
x = the axis parallel to equipment shaft centerline
y = the axis perpendicular to equipment shaft centerline
i = the horizontal axis perpendicular to equipment shaft
r = resultant
w = weight of equipment = pounds
s = suction or intake
d = discharge or exhaust
F_r = resultant shear force parallel to the flange face
D = diameter, nominal diameter = I.P.S. = iron pipe size. in inches
M = moment (foot pounds)
M_x = moment in y-z plane
M_y = moment in x-z plane
M_z = moment in x-y plane
S_h = basic allowable stress for the material of construction at maximum operating temperature (see ANSI B3I.3)
D_c = pipe size (I.P.S.) of the connection, in inches up to 8 in. in diameter. For 10 in. and larger use (16 + D) ÷ 2
D_e = diameter of a circular opening equal to the total areas of the inlet, extraction and exhaust openings up to a value of 9 in. in diameter. For values beyond this use a value of (18 + Equivalent diameter) ÷ 2.
D_o = Outside diameter of pipe, in inches, rounded up to the nearest greater ½ in.
h = Length of shortest leg in feet
L = Maximum length in feet (90° to the short leg)
T = Temperature difference. Design °F – Installation °F
A = Coefficient for determining minimum leg permitted at design temperature in °F

Figure 10.13 Piping stress equation symbol definitions.

To use this method, several factors must be established. The anchor points must be known or assumed. The design pressure and temperatures, expansion coefficients, and any ranch or equipment restraints must be included. Any special design considerations such as start-up and cyclic conditions must be known. The length of pipe is based on standard weight (Std.) carbon steel pipe. When pipe wall thickness is different than the standard weight, a correction factor of rationing the moments of inertia must be applied. For example,

$$\text{Minimum } h = \left(\frac{\text{Moment of Inertia, Pipe Specified}}{\text{Moment of Inertia, Std, Weight Pipe}}\right) \times (\text{Minimum } h \text{ in the Shape Formula}) \tag{10.14}$$

Moment of inertia (I^4), for various pipe wall thicknesses, can be found in the piping tables of Appendix 4, Table 1. The anchor expansion adds to the thrust from the L leg correction. For example,

$$\text{Minimum } h\,(\text{Adjusted}) = \left(\frac{\text{Anchor Movement} + \text{Leg } L \text{ Movement}}{\text{Leg } L \text{ Movement}}\right) \times (\text{Minimum } h \text{ in the Shape Formula}) \tag{10.15}$$

The minimum length of the h leg required to provide an adequately flexible member must be tested by applying a factor, "A," that corrects for design temperature. The coefficients for "A" are included in Table 10.1.

The formula is expressed as

$$\text{Minimum } h = AD \tag{10.16}$$

Example 10.7 *Calculation of minimum length "*h*" for the short leg and the maximum length "*L*" for a L-shaped configuration*

Given:

Piping configuration in Figure 10.14.
Pipe is 8 in., Schedule 60.
Design temperature is 420 °F and the ambient temperature at installation is 60 °F.

Table 10.1 Coefficient "A" for carbon steel pipe

Coefficient "A" for carbon steel pipe			
Design		**Design**	
Temp °F	**A**	**Temp °F**	**A**
150	0.4	600	2.2
200	0.6	700	2.5
300	1	800	2.8
400	1.4	900	2.95
500	1.8	1000	3.15

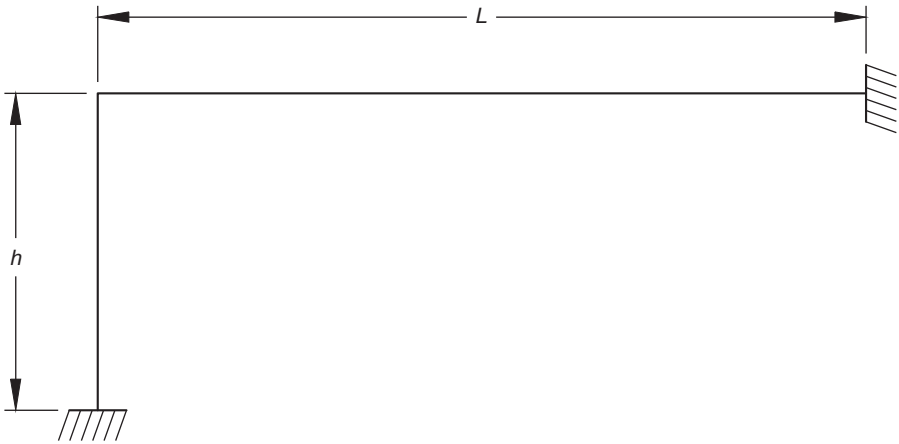

Figure 10.14 Example 10.7 piping configuration.

Determine:

Calculate the minimum length for the short leg and the maximum length for the long leg.

Solution:

(1) Test for the minimum h.
Interpolating Table 10.1 for a design temperature of 420 °F,

$$A = 1.48$$
$$D_o = 8.265 \text{ in.}$$
$$= 9.0 \text{ in. (rounded up to nearest ½ – in.)}$$
$$h = AD_o$$
$$= (1.48)(9)$$
$$= 13.3 \text{ ft.}$$
$$= 14 \text{ ft. (rounded up to the nearest integer)}$$

(2) Adjust the value of h for nonstandard pipe weight.

$$\text{Schedule 60, } I = 88.8$$
$$\text{Schedule 40, } I = 72.5$$
$$\text{Factor Adjustment} = \frac{88.8}{72.5} = 1.22$$

Then,

$$\text{“}h\text{”} = (h)(\text{Factor Adjustment})$$
$$= (14)(1.22)$$
$$= 17.08$$
$$= 17 \text{ ft. (round to nearest integer)}$$

(3) Determine the value for "L":

$$L = \frac{400(h)^2}{D_o T} = \frac{(400)(17)^2}{(9)(360)} = 35.7 \text{ or } 36 \text{ ft.}$$

Thus, the piping configuration is acceptable.

Example 10.8 *Calculation of the minimum length* "h" *for the short leg and the maximum length* "L" *for a single plane configuration*

Given:

Piping configuration in Figure 10.15, which is an adaptation of Figure 10.14.
Pipe is 5 in., Schedule 40.
Design temperature is 325 °F and the ambient temperature at installation is 70 °F.

Determine:

Calculate the minimum length for the short leg and the maximum length for the long leg.

Solution:

(1) Determine L, the major length of line at right angles between the anchors: $a+c+e$ is greater than $b-d+f$. Thus,

$$\begin{aligned} L &= a+c+e \\ &= 6\text{ ft.} + 7\text{ ft.} + 5\text{ ft.} \\ &= 18\text{ ft.} \end{aligned} \tag{10.17}$$

(2) Solve for the minimum "h."

$$\begin{aligned} D_o &= 5.563 \text{ in.} \\ &= 6.0 \text{ in. (rounded up to the nearest ½-in.)} \end{aligned}$$

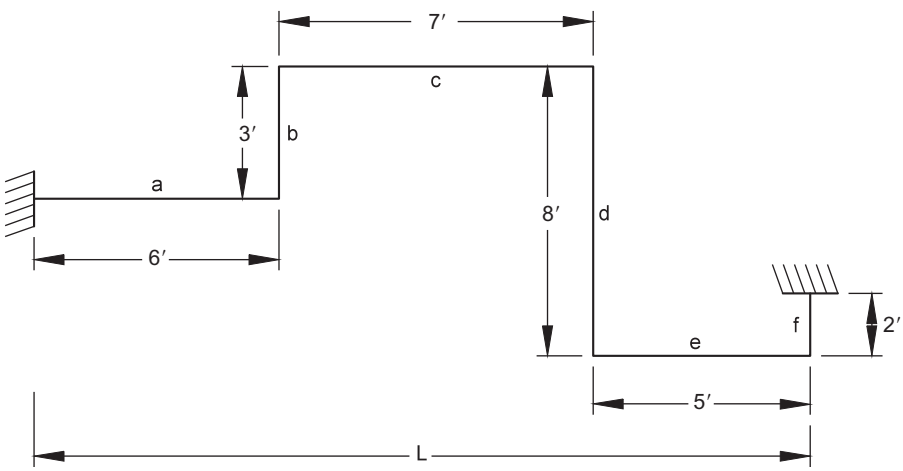

Figure 10.15 Example 10.8 adaptation of L-shaped configuration, single plane.

$$\Delta T = 325\ °\text{F} - 70\ °\text{F}$$
$$= 255\ °\text{F}$$

Interpolating Table 10.1 for a design temperature of 325 °F,

$$A = 1.1$$
$$\text{Minimum } h = \left((0.0025)(D)_o(L)(\Delta T)\right)^{1/2}$$
$$= [(0.0025)(6)(255)]^{1/2} \tag{10.18}$$
$$= 8.3\ \text{ft.}$$
$$= 9\ \text{ft. (rounded up to the nearest integer)}$$

(3) Test the minimum "*h*":

$$h = AD_o$$
$$= (1.1)(6)$$
$$= 6.6\ \text{ft.}$$
$$= 7\ \text{ft. (rounded to the nearest integer)}$$

Use the larger of the two values (9 ft.).

(4) Compare the minimum *h* required with

$$= \left(b^2 + d^2 + f^2\right)^{1/2}$$

If the square root of the sum of the squares equals or exceeds the required minimum h, the flexibility is sufficient.

$$= \left((3)^2 + (8)^2 + (2)^2\right)^{1/2}$$
$$= 8.77\ \text{ft. or } 9\ \text{ft.}$$

Thus, the piping configuration is acceptable.

Example 10.9 *Calculation of the minimum length* "h" *for the short leg and the maximum length* "L" *for a three-plane configuration*

Given:

Piping configuration in Figure 10.16, which is an adaptation of Figure 10.15.
Pipe is 8 in., Schedule 40.
Design temperature is 450 °F and the ambient temperature at installation is 80 °F.

Determine:

Determine if the flexibility is satisfactory.

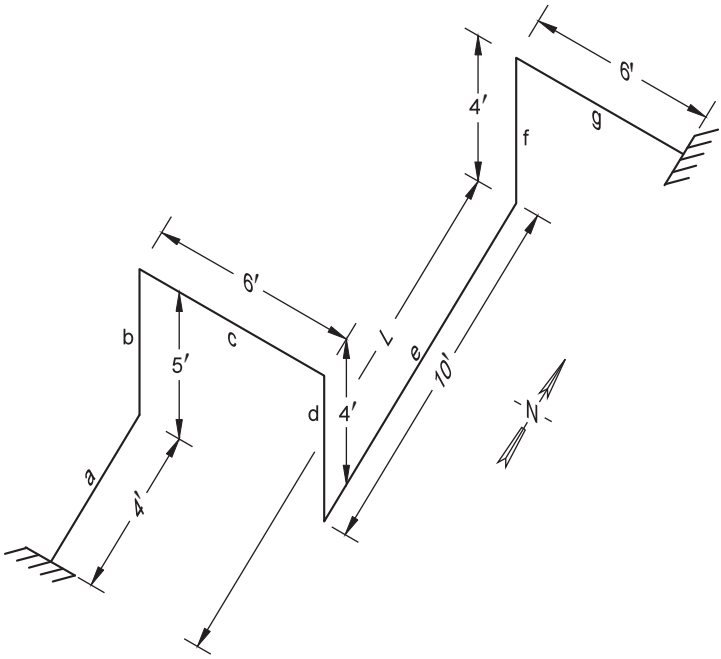

Figure 10.16 Example 10.9 adaptation of L-shaped configuration, three plane.

Solution:

(1) Determine the distances between anchors in the horizontal plane at right angles:

$$\text{North-south distance} = a + e = 14\,\text{ft.} \tag{10.19}$$

$$\text{East-west distance} = c + g = 12\,\text{ft.} \tag{10.20}$$

$$\text{Vertical distance} = b - d + f = 5\,\text{ft.} \tag{10.21}$$

Thus, the longest distance is $a + e = 14$ ft.

(2) Solve for the minimum "h."

$$D_o = 8.625\,\text{in.} = 9.0\,\text{in. (rounded up to the nearest ½-in.)}$$

$$\Delta T = 450\ °\text{F} - 80\ °\text{F} = 370\ °\text{F}$$

Interpolating Table 10.1 for a design temperature of 450 °F,

$A = 1.6$

(3) Determine the minimum "h":

$$\begin{aligned}\text{Minimum } h &= (0.0025D_o(L)(\Delta T))^{1/2}\\ &= [(0.0025)(9)(14)(370)]^{1/2}\\ &= 10.8\text{ ft.}\\ &= 11\text{ ft. (rounded to the nearest integer)}\end{aligned} \tag{10.22}$$

(4) Test the minimum h:

$$\begin{aligned}h &= AD_o\\ &= (1.6)(9)\\ &= 14.4\text{ ft.}\\ &= 15\text{ ft. (rounded to the nearest integer)}\end{aligned}$$

Use the larger value (15 ft.).
The sum of the legs

$$b + c + d + f + g \geq h$$

substituting

$$\begin{aligned}&5\text{ ft.} + 6\text{ ft.} + 4\text{ ft.} + 6\text{ ft.} \geq 15\text{ ft.}\\ &25\text{ ft.} \geq 15\text{ ft.}\end{aligned}$$

Thus, the piping configuration is acceptable.

10.6.3 Z-shaped configuration

The basic equations for determining the minimum h and maximum L for Z-shaped configurations are

$$\text{Minimum } h^2 = 0.0025D_oLT \tag{10.23}$$

$$\text{Minimum } h = (0.0025D_oLT)^{1/2} \tag{10.24}$$

$$\text{Maximum } L = \frac{400(h)}{D_oT} \tag{10.25}$$

To test the minimum h, the following ratio must apply (see Figure 10.17):

$$\frac{b}{c} \geq 4 \tag{10.26}$$

Test both the minimum h, and leg b, as equal to $A\ D_o$.

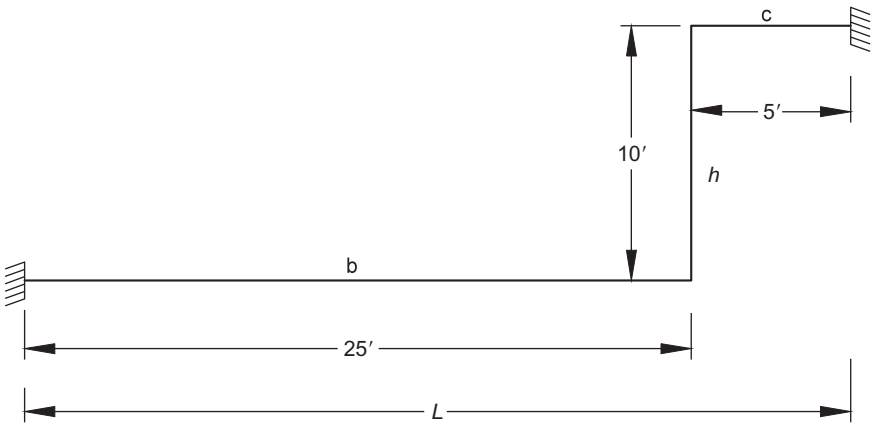

Figure 10.17 Example 10.10 Z-shaped configuration.

Example 10.10 *Determining the flexibility in a Z-shaped configuration*

Given:

Piping configuration in Figure 10.17.
Pipe is 6 in., Schedule 40.
Design temperature is 275 °F and the ambient temperature at installation is 25 °F.

Determine:

Determine if the flexibility is satisfactory.

Solution:

(1) Solve for the minimum h:

$$\begin{aligned} h &= (0.0025 D_o L T)^{1/2} \\ &= [(0.0025)(7)(30)(250)]^{1/2} \\ &= 11.4\,\text{ft.} \\ &= 12\,\text{ft. (rounded to the nearest integer)} \end{aligned}$$

(2) Solve for the minimum "h."

$$\begin{aligned} D_o &= 6.625\ \text{in.} \\ &= 7.0\,\text{in. (rounded up to the nearest ½-in.)} \end{aligned}$$

$$\begin{aligned} \Delta T &= 275\ °\text{F} - 25\ °\text{F} \\ &= 250\ °\text{F} \end{aligned}$$

Interpolating Table 10.1 for a design temperature of 275 °F,

$$A = 0.8$$

(3) Test for the minimum h:

$$\begin{aligned} h &= AD_o \\ &= (0.8)(7) \\ &= 5.6 \text{ ft.} \\ &= 6 \text{ ft. (rounded to nearest integer)} \end{aligned}$$

6 ft. is also a minimum for b.

(4) Test b/c ratio:

$$25/5 > 4$$
$$5 > 4$$

Thus, the piping configuration is satisfactory.

$$\begin{aligned} L &= b + c \\ &= 30 \text{ ft.} \end{aligned}$$

10.6.4 U-shaped configuration, equal legs

The basic equations for determining the minimum h and maximum U-shaped configuration are

$$\text{Minimum } h^2 = 0.0016 D_o L T \tag{10.27}$$

$$\text{Minimum } h = (0.0016 D_o L T)^{1/2} \tag{10.28}$$

$$\text{Maximum } L = \frac{625(h)^2}{D_o T} \tag{10.29}$$

To test for the minimum h,

$$h = \frac{AD_o}{1.25} \tag{10.30}$$

Example 10.11 *Determining the flexibility U-shaped configuration, equal legs*

Given:

Piping configuration in Figure 10.18.
Pipe is 10 in., Schedule 40.
Design temperature is 450 °F and the ambient temperature at installation is 50 °F.

Determine:

Determine if the flexibility is satisfactory.

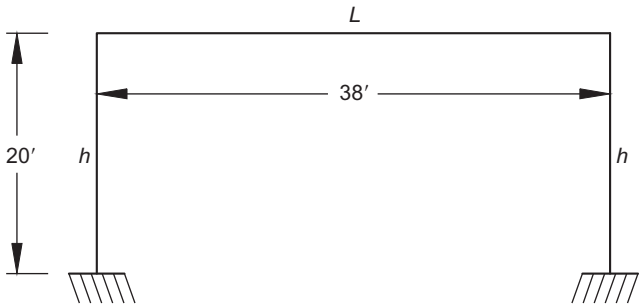

Figure 10.18 Example 10.11 U-shaped configuration, equal legs.

Solution:

(1) Solve for the minimum h:

$$h = [(0.0016)(D_o)LT]^{1/2}$$
$$= [(0.0016)(11)(38)(400)]^{1/2}$$
$$= 16.35 \text{ ft.}$$
$$= 17 \text{ ft. (rounded to the nearest integer)}$$

(2) Solve for the minimum "h."

$$D_o = 10.750 \text{ in.}$$
$$= 11.0 \text{ in. (rounded up to the nearest ½-in.)}$$
$$\Delta T = 450\ °\text{F} - 50\ °\text{F}$$
$$= 400\ °\text{F}$$

Interpolating Table 10.1 for a design temperature of 450 °F,

$$A = 1.6$$

(3) Test for the minimum h.

$$h = \frac{AD_o}{1.25}$$
$$= \frac{(1.6)(11)}{1.25}$$
$$= 14.08 \text{ ft. or } 14 \text{ ft.}$$

The piping configuration is acceptable.

10.6.5 U-shaped configuration, unequal legs

The basic equations for determining the minimum h and maximum L for U-shaped piping configurations with unequal legs are

$$\text{Minimum } h^2 = 0.0021 D_o (L_1 - L_2) T \tag{10.31}$$

$$\text{Minimum } h = [0.021 D_o (L_1 - L_2) T]^{1/2} \tag{10.32}$$

$$\text{Maximum } L_1 - L_2 = \frac{500(h)^2}{D_o T} \tag{10.33}$$

To test for minimum $h + L_2$

$$h + L_2 = A D_o \tag{10.34}$$

Example 10.12 *Determining the flexibility of a U-shaped configuration, unequal legs*

Given:

Piping configuration in Figure 10.19.
Pipe is 12 in., Schedule 40.
Design temperature is 375 °F and the ambient temperature at installation is 75 °F.

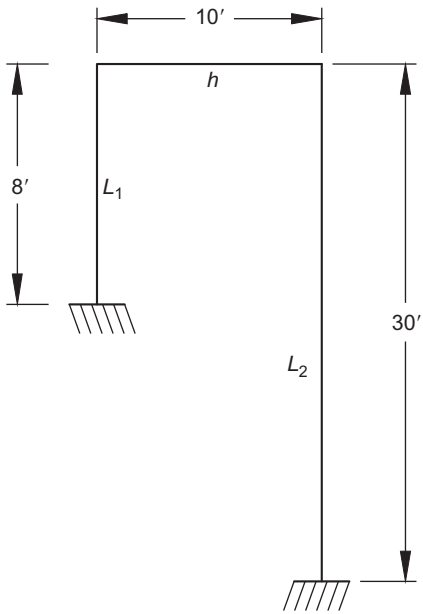

Figure 10.19 Example 10.12 U-shaped configuration, unequal legs.

Determine:

Determine if the flexibility is satisfactory.

Solution:

(1) Solve for the minimum h:

$$\begin{aligned} h &= [0.0021 D_o (L_1 - L_2) T]^{1/2} \\ &= [0.0021(13)(30-8)(300)]^{1/2} \\ &= 13.42 \text{ ft.} \\ &= 14 \text{ ft. (rounded to the nearest integer)} \end{aligned}$$

(2) Solve for minimum $h + L_2$.

$$\begin{aligned} D_o &= 12.750 \text{ in.} \\ &= 13.0 \text{ in. (rounded up to the nearest ½-in.)} \end{aligned}$$

$$\begin{aligned} \Delta T &= 375\ ^\circ\text{F} - 75\ ^\circ\text{F} \\ &= 300\ ^\circ\text{F} \end{aligned}$$

Interpolating Table 10.1 for a design temperature of 375 °F,

$A = 1.3$

(3) Test for minimum $h + L_2$:

$$\begin{aligned} h + L_2 &= A D_o \\ &= (1.3)(13) \\ &= 16.9 \text{ ft.} \\ &= 17 \text{ ft. (rounded to the nearest integer)} \end{aligned}$$

Minimum L_1 also equals $h + L_2$ or 17 ft.
Thus, the piping configuration is satisfactory.

10.7 Expansion piping

10.7.1 General considerations

Movement due to thermal expansion and contraction may be resolved by suitable pipeline geometry or may require the use of flexible sections called expansion joints. Simple geometric treatment can take the form of straight runs interrupted by looped bends (expansion loops) or sections of flexible pipe (expansion bellows). In severe conditions or for protection of mounted equipment, thrust loads resulting from expansion or contraction are best resolved by expansion joints.

10.7.2 Expansion loops

Expansion loops consist of rectangular loops formed by using 90° angle bends (Figure 10.20). In most cases, the cold spring technique is applied. The primary advantage of an expansion loop is that it is pressure-balanced. However, there are disadvantages such as increased frictional loss (usually negligible), size (especially in large-diameter pipe), and dead weight, which may have to be supported and may create a problem in crowded facilities. A typical expansion loop for use in hot piping systems is shown in Figure 10.21.

The basic equations for determining the minimum h, maximum L, minimum W, and preferred W for expansion loops are

$$\text{Minimum } h = [0.02 D_o L T]^{1/2} \tag{10.35}$$

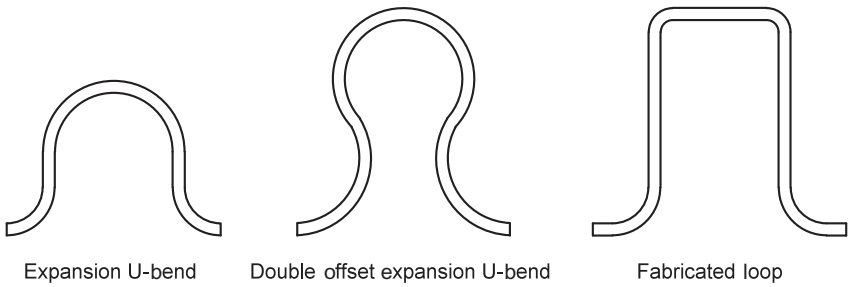

Figure 10.20 Expansion loops.

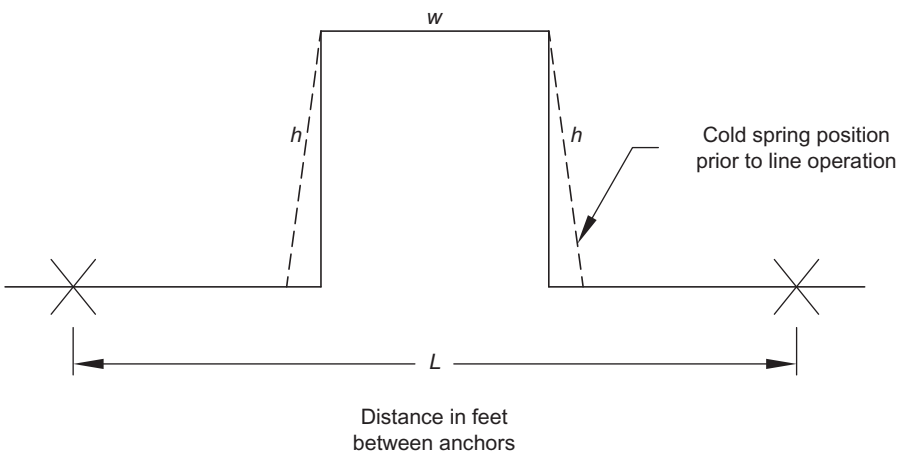

Figure 10.21 Typical expansion loop.

$$\text{Minimum } h^2 = 0.0004 D_o L T \tag{10.36}$$

$$\text{Maximum } L = \frac{2500(h)^2}{D_o T} \tag{10.37}$$

$$\text{Minimum } W = 0.5h \tag{10.38}$$

$$\text{Preferred } W = 1.5h \tag{10.39}$$

To test for minimum h:

$$h = \frac{AD_o}{1.25} \tag{10.40}$$

Example 10.13 *Expansion loop design*

Given:

Expansion loop in Figure 10.22.
Pipe loop is 8 in., Schedule 40.
Design temperature is 385 °F and the ambient temperature at installation is 60 °F.

Determine:

Determine if the design is satisfactory.

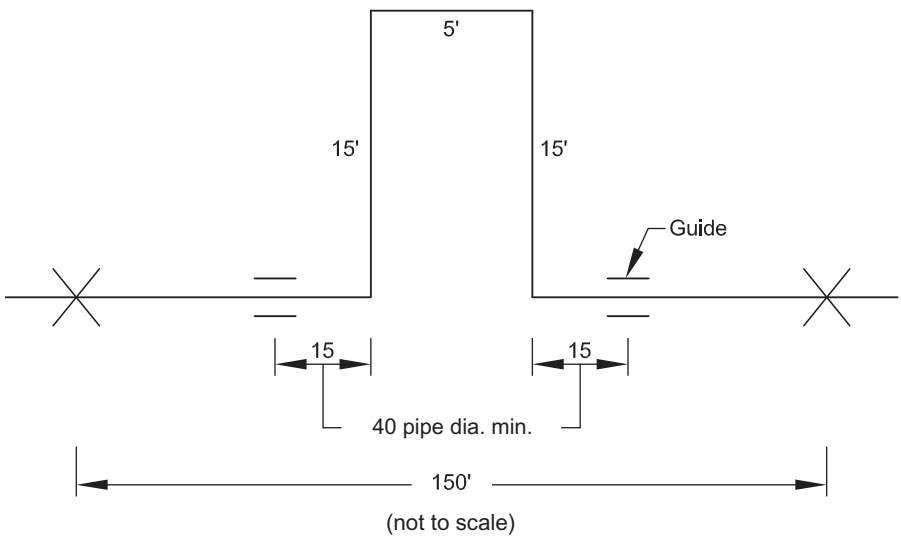

Figure 10.22 Expansion loop design.

Solution:

(1) Solve for the minimum h.

$$D_o = 8.625 \text{ in.}$$
$$= 9 \text{ in. (rounded to nearest integer)}$$
$$\Delta T = 385\ ^\circ\text{F} - 60\ ^\circ\text{F}$$
$$= 325\ ^\circ\text{F}$$
$$L = 150 \text{ ft.}$$
$$h = 0.02(D_o L T)^{1/2}$$
$$= 0.02[(9)(150)(325)]^{1/2}$$
$$= 13.25 \text{ ft.}$$
$$= 14 \text{ ft. (rounded to the nearest integer)}$$

Thus, the value of h (15) in Figure 10.22 is acceptable.

(2) Solve for the minimum W:

$$\text{Minimum } W = 0.5h$$
$$= (0.5)(15 \text{ ft.}) \tag{10.41}$$
$$= 7.5 \text{ ft.}$$

Thus, the length of W (5) as shown in Figure 10.22 is not adequate. Thus,

$$\text{Preferred } W = 1.5h$$
$$= (1.5)(15 \text{ ft.}) \tag{10.42}$$
$$= 22.5 \text{ ft.}$$

(3) Test for the minimum h.

$$h = \frac{AD_o}{1.25} \tag{10.43}$$

From Figure Table 10.1, at a design temperature of 385 °F, interpolate

$$A = 1.1$$
$$h = \frac{(1.1)(9)}{1.25}$$
$$= 7.92 \text{ ft. or } 8 \text{ ft.}$$

Thus, W should be 7.5-22.5 ft.

Note: The technique is used to determine the location of the pipe guides (see Figure 10.22).

10.7.3 Anchor force considerations

As an expansion loop expands, forces are transmitted to the two anchor points. The anchor force is expressed as

$$F = CEI \tag{10.44}$$

and the maximum pipe stress experienced by the loop is expressed as

$$S = KED_o \tag{10.45}$$

where

F = anchor force (lbs),
C = constant from Table 10.2,
E = expansion to be absorbed by the loop (limited to 10 in.) (in.),
I = moment of inertia (in.^{4}),
S = maximum pipe stress of the loop (psi),
D_o = outside pipe diameter (in.),
K = constant from Table 10.3.

The equation assumes the use of long-radius elbows and is restricted to line sizes between 4 and 14 in.

Example 10.14 *Expansion loop stress and anchor force*

Given:

Expansion loop in Figure 10.23.
Pipe is 12 in., standard weight, grade B carbon steel.
Design temperature is 370 °F and the ambient temperature at installation is 70 °F.

Determine:

Determine the maximum stress.

Table 10.2 Values for constant *C*

Values for constant *C*						
Length of *H* in feet	20	1.64	1.54	1.46	1.39	1.33
	19	1.92	1.80	1.70	1.61	1.56
	18	2.20	2.06	1.95	1.84	1.78
	17	2.47	2.31	2.19	2.08	2.00
	16	2.75	2.57	2.44	2.31	2.22
	1	3.03	2.83	2.68	2.55	2.44
	14	3.41	3.18	3.02	2.88	2.74
	13	4.02	3.76	3.54	3.36	3.20
	12	4.83	4.51	4.25	4.04	3.84
	11	5.86	5.45	5.51	4.89	4.66
	10	7.10	6.60	6.23	5.91	5.65
		10	15	20	25	30
Length of *W* in feet						

Table 10.3 Values for constant *K*

Values for constant *K*						
r	20	337	295	270	248	230
	19	361	318	290	267	246
	18	385	341	310	285	263
	17	409	364	330	304	279
	16	433	387	350	322	296
	15	457	410	372	340	313
	14	487	437	396	362	330
	13	528	475	428	391	361
	12	582	521	471	429	395
	11	647	577	520	474	436
	10	725	642	578	526	484
		10	15	20	25	30

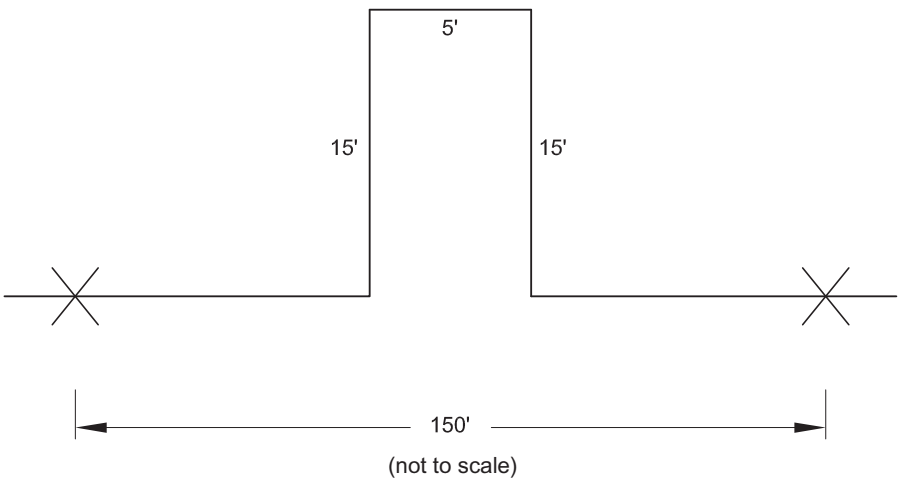

Figure 10.23 Expansion loop stress and anchor force.

Solution:

(1) Determine the growth of the pipe:

$$E = \alpha L \Delta T \tag{10.46}$$

$$L = 150\,\text{ft.} + 15\,\text{ft.} + 15\,\text{ft.}$$
$$= 180\,\text{ft.}$$
$$\Delta T = 370\ ^\circ\text{F} - 70\ ^\circ\text{F}$$
$$= 300\ ^\circ\text{F}$$
$$E = \left(6.9 \times 10^6/^\circ\text{F}\right)(180\,\text{ft.})(300\ ^\circ\text{F})$$
$$= 0.37\,\text{ft.}$$
$$= 4.5\,\text{in.}$$

Determine the force at each anchor:

$C = 3.03$, from Table 10.2

$E = 4.5$

$I = 279$, from Appendix 4, Table 1

$$\begin{aligned} F &= CEI \\ &= (3.03)(4.5)(279) \\ &= 3804\,\text{lbs} \end{aligned} \tag{10.44}$$

(2) Determine the maximum stress experienced by the loop:

$K = 457$, from Table 10.3

$E = 4.5$, from Step 1

$D_o = 12.75$ in., from Appendix 4, Table 1

$$\begin{aligned} S &= KED_o \\ &= (457)(4.5)(12.75) \\ &= 26,220\,\text{psi} \end{aligned} \tag{10.45}$$

10.7.4 Expansion joints

10.7.4.1 General considerations

The two types of expansion joints are bellows type and sleeve or slip type. It is important that the movement of piping systems, which incorporate these manufactured expansion joints, is restricted to the joint. The best way to restrict movement to the joint is through the use of properly located pipe anchors and alignment guides.

10.7.4.2 Bellows-type expansion joint

The bellows-type expansion joint is used on engine exhausts, steam exhausts, low-pressure fuel gas and lube oil, and fuel gas services (Figure 10.24). The joints will allow some offset normal to the longitudinal axis but, if overextended, will crack in the crevice of the convolution.

10.7.4.3 Slip-type expansion joint

The slip-type expansion joint is used to accommodate pipe expansion and contraction where low-pressure hot water is transported, such as in engine jacket water line (Figure 10.25). The pipe is slipped inside the body (sleeve) with a gap left for thermal expansion. Clamps compress the packing between the body and slip pipe seal against leakage.

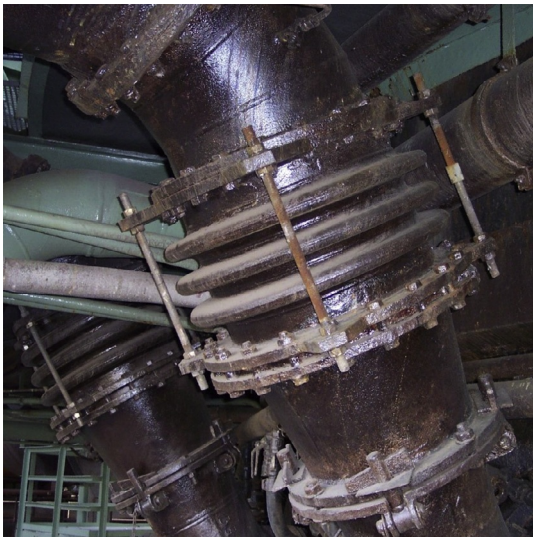

Figure 10.24 Bellows-type (convoluted) expansion joint.

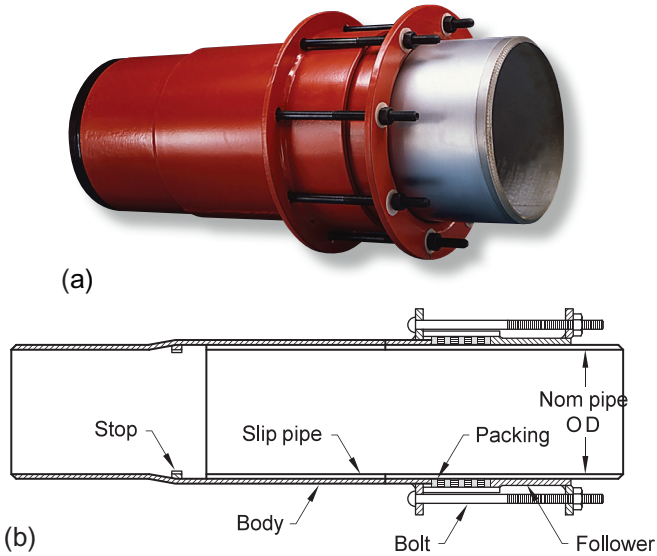

Figure 10.25 Slip-type expansion joint. (Courtesy of Dresser Industries)

10.8 Pipe dynamics

10.8.1 Introduction

10.8.1.1 What does pipe dynamics cover?

Pipe dynamics covers all the forces that may cause pipe motion and pipe response.

108.1.2 What does pipe dynamics include?

Pipe dynamics includes the forces transmitted to the pipe as a result of machine case motion from mechanical imbalance and the forces and resultant motion induced by pulsation. Pipe dynamics also covers the tendency of the pipe to amplify motion when the frequency of the applied force is close to the pipe's natural frequency.

10.8.1.3 What is a pipe's natural frequency?

A pipe's natural frequency is the frequency at which it will vibrate when excited by a single blow and is the mechanical resonant frequency of the pipe.

10.8.1.4 What does this section cover?

This section provides specific actions that may be used to minimize problems associated with piping dynamics. In addition, it places emphasis on problems associated with reciprocating compressors and pumps as complex piping systems require either analog or digital computer modeling to predict and eliminate problem areas.

10.8.1.5 Some techniques used to reduce pipe motion

Surge bottles are used in piping, which reduces the amplitude of the pulse entering the pipe. Acoustic filters are used for controlling the frequencies applied to piping and reduce the complexity of the waveform. Restraints are also used to change the natural frequency of piping. Special piping configurations are used to detune piping segments, thus controlling natural frequencies.

10.8.2 Mechanical induced vibration

10.8.2.1 Basic considerations

Unless reciprocating machine parts are balanced by parts of equal weight moving in the opposite direction, forces will be applied to the machine case through the bearings. These forces result in vibration, and even a perfectly balanced compressor will vibrate if connected to an internal combustion engine that is not balanced. An oscillating force is applied to the piping through connections to the machine.

10.8.2.2 Pipe's natural frequency

Every object has a natural frequency at which it will vibrate. If excited at this frequency, the motion that results is amplified. Being excited, pipe vibrates much like a guitar string, and the bending moment applied to the pipe by motion may cause a stress that exceeds the pipe's cyclic endurance stress. In other words, the pipe stress is greater than the endurance limit of the pipe material, and the pipe will eventually fail from fatigue.

10.8.2.3 Vibration analyzer

In analyzing a vibration to determine the source, a mechanically resonant motion can sometimes be identified by the fact that a relatively small force on the center of the pipe span will reduce the motion. This occurs because the force changes the natural frequency of the span. If the vibration is caused solely by pulsation or acoustic pressure waves, the forces necessary to restrain the motion would usually be great because the excitation force is located at coupling points in the pipe and is not externally controllable. A vibration analyzer is essential to determine forces, frequency, and displacements of vibrating equipment.

10.8.3 Machine-induced pressure waves

10.8.3.1 General considerations

Since piping response to applied forces can result in failure, the generation of these excitation forces becomes an important concern for the engineer. Pressure excitation forces and piping response can be predicted.

10.8.3.2 Analog analysis

Analog analysis of compressors and piping systems can electrically duplicate the dynamics of reciprocating pumps and compressors, thus providing the engineer with a preview of the operating conditions of the piping.

10.8.3.3 Digital analysis

Computer models can also be generated, which make predictions of machine-induced waves.

10.8.3.4 Hand calculations

Simple systems are generated by hand calculations.

10.8.3.5 Pulse waves

Each time the crankshaft of a machine converts rotary motion into reciprocating motion, discontinuities occur. The reciprocating part must accelerate from zero velocity to the speed of the crank at its maximum distance from the axis of the reciprocating motion and immediately begin to decelerate to zero in 1/4 turn of the crank. On the suction

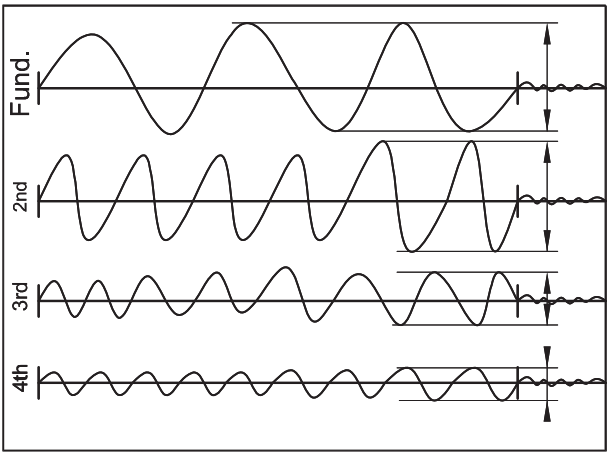

Figure 10.26 Fundamental valve harmonics.

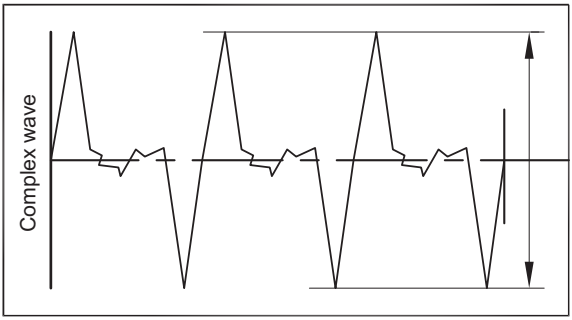

Figure 10.27 Complete wave.

and discharge of each cylinder, this action generates a pulse. The pulse pressure impressed on the static pressure of the system is negative on the suction side and positive on the discharge side of the cylinder. Without the use of some type of suppression pulse, waves of 30-100 psi or more peak-to-peak amplitude pressure change of the suction or discharge stroke may be generated. If the discharge pulse frequency is equal to the natural acoustic frequency of the piping system, the pulse will be amplified 10 to 30 times the amplitude of the input signal. Since the pressure pulse constitutes a sound wave, the pulse travels in the media at the speed of sound. Figure 10.26 shows a fundamental wave and its second, third, and fourth harmonic. In actual operation, all of these waves combine to produce a complex wave similar to the one shown in Figure 10.27.

10.9 Reciprocating compressors

When a sonic wave impinges on a surface, it produces a force. This force is equal to the product of surface area and pressure differential between the high and low pressures being applied. This is force is shown as below:

Figure 10.28 Suction and discharge surge bottles for a reciprocating compressor.

$$F = \Delta PA \tag{10.47}$$

where

F = force due to pressure pulse (lbs),
ΔP = peak-to-peak pressure (psi),
A = cross-sectional area (in.^{2}).

10.10 Surge bottle

10.10.1 General considerations

A surge bottle (Figure 10.28) provides capacitance for pulsating flow. Capacitance refers to the ability of a device to contain more material with an increase in pressure. The pressure rise in the container depends on the size of the container and the amount of material injected per stroke. The amplitude of the pulse in the pipe is affected by the rate at which the pulse enters the piping system or by the amount of the total compressed material that enters the piping system in a given period of time. The rate is controlled by the design of the outlet nozzle. The nozzle entrance acts as a resistance to transmission of the sonic wave. The pipe acts as an impedance to provide both capacitance and resistance. The amount of energy transmitted into the pipe depends on the area of passage at the entry. A small entry into a large pipe will act as a resistance and provides a stage of pulse amplitude reduction. A surge bottle reduces the pressure drawdown on the suction stroke and the horsepower requirements when suction pressures are very low.

10.10.2 Design considerations

The design of surge bottles should result in a vessel that is of practical size. The vessel footprint and weight must be such that the bottle will not interfere with maintenance and will excessively increase the load on the compressor cylinder and associated

supports. The bottle must provide adequate pulse suppression and be nonresonant to generated frequencies. Successful design includes

- determining the acceptable pulse level;
- sizing the surge bottle so as not to exceed the calculated allowable pulse;
- judging the acceptability of surge bottle size, shape, and weight;
- calculating the maximum shaking forces that could result in the surge bottle and to minimize the effect;
- determining the nozzle sizing and locations and any baffling required; and
- calculating the required mechanical strength for the design conditions.

10.10.3 Calculation of acceptable pulse level

10.10.3.1 General considerations

Each manufacturer has a preference for bottle sizing techniques and many have developed their own proprietary method. Any equation may be used as a starting point and is dependent on the engineer's judgment. API Standard 618 Equation 1 is not acceptable in most applications because pulse levels are excessive above 200 psia. API Standard 618 Equation 2 provides excellent pulse suppression but yields very large bottles for low-compression ratio designs. The 2% rule gives very large bottles at pressure of 100 psia or less and high pulse levels at high pressures.

The ExxonMobil Equation provides a good compromise as it results in large bottles when compression ratios are below 1.5 or when gas pressures exceed 3000 psig.

10.10.3.2 ExxonMobil Equation

The ExxonMobil Equation expresses the allowable pressure rise as a function of the design pressure. This provides acceptable sizes between 20 and 2000 psig unless in low ratio service (below 1.5). The equation is as follows:

$$\%\Delta P_{\mathrm{A}} = \left(\frac{3375}{P}\right)^{\frac{1}{3}} \tag{10.48}$$

where

$\%\Delta P_{\mathrm{A}}$ = allowable peak-to-peak pulse expressed as a percent of the design pressure (psia),
3375 = empirical constant,
P = design pressure (psia).

Example 10.15 *Calculation of acceptable pulse level*

Determine:

Determine the pulse level for a surge bottle with a design pressure of 300 psia using the ExxonMobil Equation.

Solution:

$$\begin{aligned}\%\Delta P_A &= \left(\frac{3375}{P}\right)^{\frac{1}{3}} \\ &= \left(\frac{3375}{300}\right)^{\frac{1}{3}} \\ &= 2.24\%\end{aligned} \tag{10.49}$$

10.10.3.3 API Standard 618 Equation 1

The peak-to-peak pulsation levels at the compressor should not exceed the following unless efficiency requirements or other requirements are specified:

$$\%P_A = 8\left(\frac{R-1}{R}\right)^{0.5} \tag{10.50}$$

where

$\%P_A$ = percentage of maximum allowable peak-to-peak pulsation,
R = stage pressure ratio.

For compression of gas to 1000 psia, Equation 1 allows a 69 psi pulse for a compression ratio of 4 and a 46 psi pulse for a compression ratio of 1.5. For 250 psi compression, the maximum allowable pulse varies between 12 and 17 psi. This results in excessive pressure on the discharge side of the cylinder.

10.10.3.4 API Standard 618 Equation 2

API also presents the following equation:

$$\%P_A = \frac{10}{(P_L)^{\frac{1}{3}}} \tag{10.51}$$

or 2% of P_L, whichever is less for pressures over 1000 psi and 500 BHP or higher. where

$\%P_A$ = percentage of maximum allowable peak-to-peak pulsation,
P_L = average absolute line-side pressure (psia).

Equation 2 limits the pulse to 1.02% compared with 1.49% for the ExxonMobil Equation and 6.93% for the API Equation 1.

10.10.4 Bottle sizing

Many methods are used for sizing compressor surge bottles.

10.10.4.1 GPSA method

GPSA uses the general rule of 5 to 7 swept volumes of the cylinder to which the bottle is attached. This method yields a bottle size that has a narrow application, because it does not directly relate to the actual volume of gas discharged to the bottle in one stroke of the piston.

Example 10.16 *Discharge surge bottle sizing*

Given:
Using the pulse level of 2.24% calculated in Example 4.16, determine the size of a surge bottle given the following conditions:

Cylinder capacity = 4 MSCFD
Operating pressure = 300 psia
Operating temperature = 242 °F
Operating speed = 900 rpm
Compression ratio = 3.2
Gas gravity = 0.6
Pressure base = 14.65 psia

Solution:

(1) Determine the strokes per day:

$$Strokes/Day = \left(1440\frac{Min}{Day}\right)\left(1800\frac{Strokes^*}{Min}\right)$$

*2 strokes per revolution

(2) Determine the amount of standard cubic feet of gas discharged per stroke:

$$Q_S = \frac{4 \times 10^6 SCFD}{2.592 \times 10^6 Strokes/Day} = 1.543 SCF/Stroke$$

(3) Convert standard cubic feet per stroke of actual cubic feet of gas per stroke.
This requires using the following equation to correct for actual operating pressure and temperature:

$$Q_A = Q_S\left(\frac{P_0}{P_A}\right)\left(\frac{T_A}{T_0}\right)Z \tag{10.52}$$

where

Q_A = actual cubic feet per stroke (ft.^{3}/stroke),
Q_S = standard cubic feet per stroke (SCF/stroke),
P_0 = pressure base at standard condition (psia),
P_A = actual operating pressure (psia),
T_0 = temperature at standard conditions (°R),
T_A = actual operating temperature (°R),

$Z =$ super compressibility factor, dimensionless.

Thus,

$Q_S = 1.543$ SCF/strokes

$P_0 = 14.65$ psia

$P_A = 300$ psia

$$T_0 = 460\ °F + 60\ °F$$
$$= 520\ °F$$

$$T_A = 460\ °F + 242\ °F$$
$$= 702\ °F$$

$Z = 0.984$ (see below)

From GPSA Engineering Data Book (Figure 16.6 "Pseudo-Critical Properties of Natural Gases") for a gas gravity of 0.6

$$P_C = 672 \text{ psia}; \quad T_C = 358^{\circ}R$$
$$P_r = \frac{P}{P_C} = \frac{300}{672} = 0.446$$
$$T_r = \frac{T}{T_r} = \frac{702}{358} = 1.96$$

From GPSA Engineering Data Book (Figure 16.3 "Compressibility Factors of Natural Gas"), $Z = 0.984$.

Thus,

$$Q_A = 1.543\left(\frac{14.65}{300}\right)\left(\frac{702}{520}\right)0.984$$
$$= 0.1001 \text{ ft.}^3/Stroke$$

(4) Calculate the surge volume required.

If the volume of the vessel and temperature remain constant and by definition of the ideal gas law, the pressure in the vessel will vary directly with the quantity of gas that the vessel contains; therefore, the 0.1001 ft.^{3}/stroke of gas injected into the surge bottle must raise the design pressure 2.24%.

For surge bottle design, 0.1001 ft.^{3} represents 0.0224 fraction of the total bottle volume; thus,

$$V_T = \frac{0.1001 \text{ ft.}^3}{0.0224}$$
$$= 4.47 \text{ ft.}^3$$

(5) Determine the surge bottle dimensions.

To determine the actual surge bottle dimensions, it is generally easier to convert the total volume required to cubic inches.

Thus,

$$V_t = (4.47\ \text{ft.}^3)\left(\frac{12\ \text{in.}}{1\ \text{ft.}^3}\right)^3$$

$$= 7724\ \text{in.}^3$$

The best length-to-diameter ratio for a surge bottle is generally considered to be 2. Thus, for $L/D = 2$,

$$V = 1.5708D^3$$

or

$$D = \left(\frac{V\ \text{in.}^3}{1.5708}\right)^{\frac{1}{3}}$$

$$= \left(\frac{7724\ \text{in.}^3}{1.5708}\right)^{\frac{1}{3}}$$

$$= 17.005\ \text{in. or } 18\ \text{in.}$$

and

$$L = 2(17.005\ \text{in.})$$
$$= 34.01\ \text{in. or } 36\ \text{in.}$$

If there is inadequate space available to use a bottle with an $L/D = 2$, an increase in diameter is allowable because the best force balanced bottle is the sphere; the equation then becomes

$$V = 2.3562D^3 \tag{10.53}$$

Verify that the bottle does not interfere with the removal of valves or other parts requiring maintenance and that bottle length will not interfere with cylinders.

10.10.4.2 Sizing and location of nozzles

As shown in Figure 10.29, the location of the compressor cylinder to surge bottle nozzle should be at the center of the bottle if an analog is not used. If this is not possible, internal baffling may be required to create balance if the analog shows a serious imbalance. The use of large-diameter, short bottle-to-cylinder nozzles tends to minimize pulse amplitude. To reduce high-frequency sonic waves to an acceptable level, low-pass filters may be used.

10.10.4.3 Mechanical strength

The wall thickness equation for a cylindrical surge bottle is the same as the ones used for a separator or scrubber made of pipe.

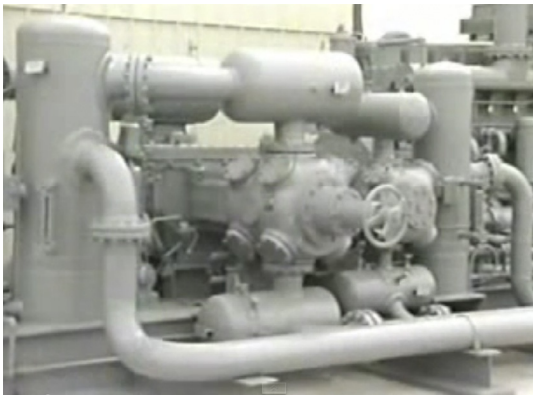

Figure 10.29 Surge bottle centered on a compressor cylinder.

Cylindrical shell:

$$t = \frac{PD}{2(SE + 0.4P)} + CA \tag{10.54}$$

2:1 Ellipsoidal head:

$$t = \frac{PD}{2SE + 1.8P} + \mathrm{CA} \tag{10.55}$$

where

T = metal wall thickness (in.),
P = operating or maximum allowable pressure (psi),
D = diameter (in.),
S = tensile strength (psi),
E = joint efficiency,
CA = corrosion allowance (in.).

Nozzles should be one schedule heavier than required to allow for resistance to mechanical stress.

10.10.4.4 Fabrication

10.10.4.4.1 Nozzle considerations

10.10.4.4.1.1 Nozzle breaks Nozzle breaks usually occur in the heat-affected zone adjacent to a weld. Residual stresses created as metal cools condition this metal to failure at lower applied stress levels than stress-relieved welds could sustain. ASME pipe code requires stress relieving (low-temperature heating to relieve internal stress) of all welded pipes 3/4 in. and greater in thickness. ASME pressure vessel code does not require stress relieving unless the metal is 1½ in. in thickness or greater. To allow for mechanical stress, the designer should always use nozzles one schedule higher than required. The designer should also use a fabrication method that requires the

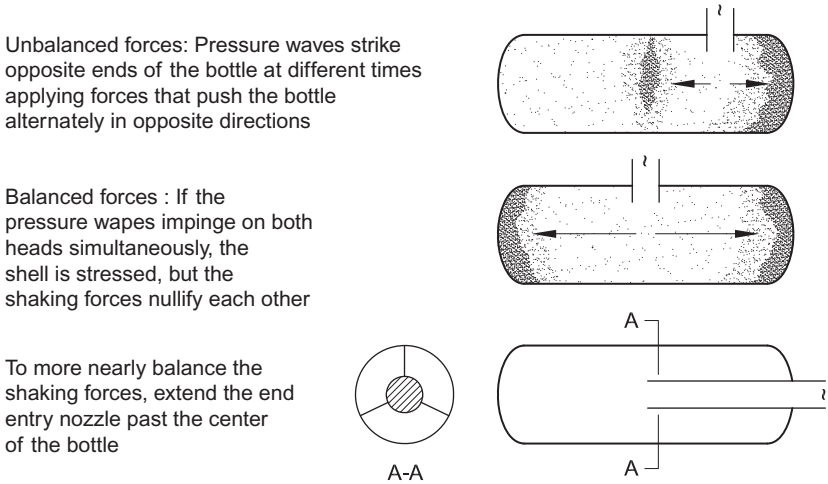

Figure 10.30 Surge bottle nozzle configurations.

nozzle to penetrate the bottle wall. A pad or saddle should be used to reinforce the bottle wall to compensate for metal removed to insert the nozzle.

10.10.4.4.1.2 Nozzle reinforcement When calculating the reinforcement required, one should not use the excess metal in the nozzle as it is used to strengthen the nozzle and not the shell. It is good practice to always replace the net metal removed from the bottle wall without using credit for weld metal. If the bottle is 20 in. or larger in diameter, nozzles flush with the shell internal diameter require back welding. This procedure cannot be accomplished satisfactorily in smaller diameter shells.

Figure 10.30 shows various methods for connecting nozzles to bottles. ASME Boiler and Pressure Vessel Code, Section VIII, Division 1, Appendix L provides guidance on the calculation of reinforcement for vessel openings.

The metal replaced in surge bottle design by the reinforcing pad is the product of (t_r) (d)

where

t_r = thickness required (in.),
d = nozzle internal diameter (ID) (in.).

10.11 Reciprocating pumps

10.11.1 General considerations

Suppression of acoustic waves is more difficult in liquids than in gases. This is due to the near incompressibility of liquids. Equipment through which these waves pass

influences the character of the waves. Time response characteristics of the system, when applied to liquid flow, are governed by the following dimensions:

- Quantity (ft.^{3})
- Potential (pressure) (lbs/ft.^{2})
- Time (s)
- Flow (ft.^{3}/s)
- Capacitance (ft.^{5}/lb)
- Resistance (lb-s/ft.^{5})
- Inductance (lb-s/ft.^{5})

10.11.2 Pulsation dampeners

Pulsation dampeners are used to suppress low-frequency pulses (Figure 10.31). Pulsation dampeners consist of a gas chamber separated from the liquid by an elastic bladder (Figure 10.32). Very high frequencies are not attenuated very well because of the bladder inertia and tuning difficulties. Failure of diaphragms and leakage of the gas charge can result in an installation that requires excessive maintenance. High frequencies are best controlled by acoustic filters (Figure 10.33).

10.11.3 Acoustic filters

Acoustic filters are best applied when designing piping for simplex, duplex, and triplex pumps with a stroke of 4 in. or more and operating at speeds exceeding 300 rpm. They are normally used to solve acoustic problems observed after start-up.

Figure 10.31 Pulsation dampener on the discharge line of a reciprocating pump.

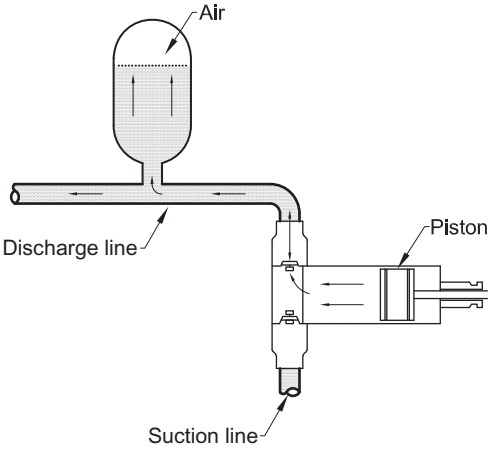

Figure 10.32 Pulsation dampener on the discharge line.

Figure 10.33 Acoustic filter for a reciprocating pump.

10.11.3.1 Acoustic filter design

10.11.3.1.1 Excitation frequencies

Vibration that takes place under excitation of external forces is called forced vibration. Vibration is caused by forces applied at regular time intervals or at a regular frequency. When the frequency is coincident with the systems' natural frequencies, a marked amplification of vibration occurs.

10.11.3.1.2 Effects of pump type and operating speed

Pump type and operating speed determine the characteristics pulse waveform and excitation frequency. Positive displacement pumps generate volume and pressure-pulse variation, which are strong sources of excitation frequency.

10.11.3.1.3 Single-acting piston pump

Each revolution of the crank produces one volume or pressure profile of approximately sinusoidal shape. Actual pulse duration and shape are influenced by the effects of fluid valves, crank, and connecting rod lengths. Figure 10.34 shows a pressure plot (volume flow rate) versus crank angle for a simplex single-acting pump.

10.11.3.1.4 Double-acting piston pump

The double-acting piston pump produces approximately two sinusoidal volume and pressure-pulse variations with each revolution of the crank. When properly phased, this gives a wave frequency of two pulses per revolution (Figure 10.35). The volume difference between the head and crank ends could be responsible for a frequency of one time per revolution and the two-per-revolution frequency.

10.11.3.1.5 Duplex double-acting pump

The duplex double-acting pump generates four pulses per revolution. Due to the differences in volume of the head and crank ends, this type of pump usually generates a strong two-per-revolution frequency.

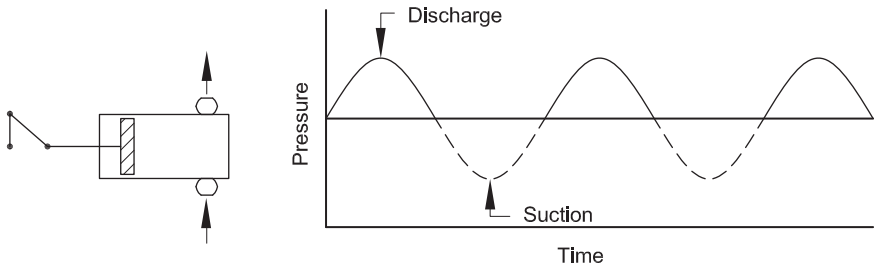

Figure 10.34 Simplex single-acting piston pump pressure versus time plot.

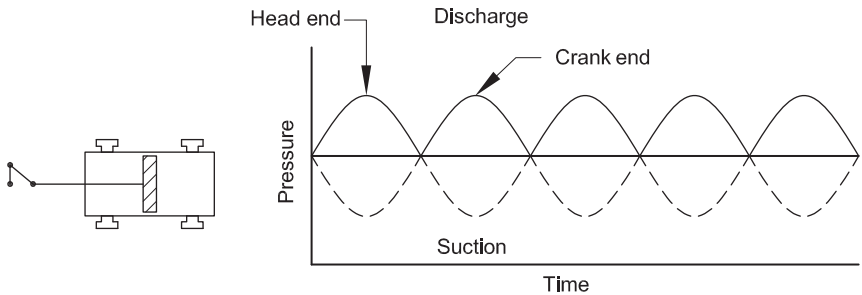

Figure 10.35 Simplex double-acting piston pump pressure versus time plot.

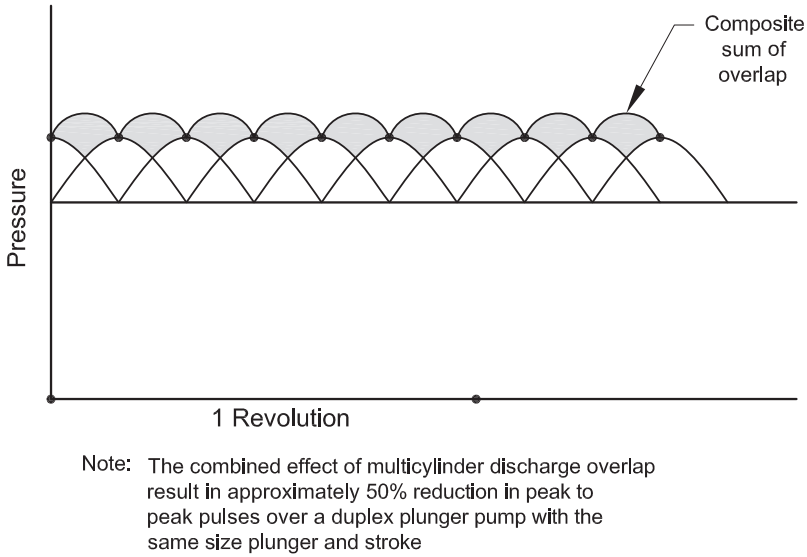

Figure 10.36 Quintuplex plunger pump pressure versus time plot.

10.11.3.1.6 Quintuplex plunger pump

Figure 10.36 illustrates the quintuplex plunger pump pulsation in which the shaded area represents the sum of the overlapping discharges. *Note:* The resulting peak-to-peak pulse is less than is experienced without overlap and explains the lower tendency of the quintuplex to vibrate when compared with simplex, duplex, and triplex plunger pumps.

10.11.3.1.7 Summary

The waveform from a pump with a number of cylinders, as received by the piping, can be determined by adding the positive parts of a series of sinusoidal waves. Each sinusoid would correspond to the frequency displacement and phase relationship of the individual piston or plunger strokes. Design of pulsation control for a pumping system must consider the fundamental frequency for the particular type of pump used. For an existing system, a direct measurement of pressure pulsation and frequency is helpful in designing pulsation control.

10.11.4 Acoustic wave transmission

10.11.4.1 General considerations

In an elastic medium, the velocity at which a pressure wave travels is retarded because of the distance that molecules must move to impart the pressure pulse to adjacent molecules. In solids, the transfer is almost instantaneous and sound velocities

are extremely high (5000 ft./s). In liquids, the transmission rate is lower (1800-4500 ft./s). In gases, the acoustic velocity is relatively low (1000-1500 ft./s). Liquid mediums, normally thought of as incompressible, have a certain amount of compressibility, which is measured in terms of bulk modulus.

10.11.4.2 Bulk modulus

Bulk modulus is the measure of the decrease in volume with an increase in pressure. The "modulus of elasticity" of a liquid varies widely, depending on the specific gravity and temperature of the liquid. Typical values are less than 30,000 psi to greater than 300,000 psi, depending upon the liquid.

Pipe containing liquid has an ability to expand under pressure, which will retard transmission of the pressure wave. The stretching of the pipe has the effect of making the bulk modulus slightly less, giving an effective bulk modulus with a greater ability to reduce pulse.

10.11.4.3 Effective bulk modulus

The effective bulk modulus K' can be calculated from the following equation:

$$K' = \frac{K}{\left[1 + \left(\frac{KD}{Et}\right)(1 - \mu^2)\right]} \tag{10.56}$$

where

K = bulk modulus uncorrected for pipe elasticity (psi),
D = pipe internal diameter (in.),
E = modulus of elasticity (psi),
$= 29.5 \times 10^6$ psi for steel pipe,
T = pipe wall thickness (in.),
M = Poisson's ratio (0.3 for steel).

Note that bulk modulus is normally given in psi units, but, for acoustic filter calculations, it is most conveniently used in psf units. A finite time is required for a sound (pressure) wave to travel a certain distance through a compressible medium. The velocity of this wave is an important factor in the design of pulsation control systems and for studies involving the dynamics of the system.

10.11.4.4 Acoustic velocity

The value of the acoustic c for the elasticity of the liquid and pipe is given as follows:

$$c = \left(\frac{K'g}{\rho}\right)^{\frac{1}{2}} \tag{10.57}$$

where

c = acoustic velocity (ft./s),
K' = effective bulk modulus as previously defined (psf),
g = gravitational constant,
=32.3 ft./s^2,
ρ = fluid density (lb/ft.^{3}).

The range when dealing with liquid pumping systems will vary from less than 2000 ft./s to more than 4000 ft./s. Sources on bulk modulus "K" are rare. Two sources that have been used with good success for hydrocarbon and water are shown in Figures 10.37 and 10.38. These curves will handle 95% of the design problems involved in upstream operations.

10.11.4.5 Dynamics analogies

Dynamic analogies are useful when it is desired to compare an unfamiliar system with one that is better known. Cybernetics relates the common characteristics of all dynamic systems to one another in a manner that establishes dimensions that allow electrical, thermal, liquid, and gas systems to become analogous, one to the other. In the conversion of alternating current to direct current, the flow is first rectified (made to flow in one direction) and then filtered to eliminate the variation in voltage. The pump discharge is unidirectional so that a rectifier is not needed; however, a filter is needed to reduce the potential (pressure) variations that have been generated. Filters consist of elements of impedance, capacitance, and resistance.

10.11.4.6 Capacitance

Bottles are analogous to condensers, choke tubes analogous to inductance coils, and acoustic resistance analogous to electrical resistance. A condenser, mechanical spring, or bottle stores energy and releases slowly after the peak input is reached. Acoustic capacitance of a volume in terms of mass density is

$$C = \frac{Vg}{\rho c^2} \tag{10.58}$$

where

C = acoustic capacitance (ft.^{5}/lb),
V = volume of bottle (ft.^{3}),
g = gravitational constant,
=32.2 ft./s^2,
ρ = fluid density (lb/ft.^{3}),
c = acoustic velocity (ft./s).

Knowing the equation for the acoustic velocity, the capacitance of the bottle can be given as follows in terms of the effective bulk modulus:

$$C = \frac{V}{K'} \tag{10.59}$$

where the terms of the equation are the same as defined earlier.

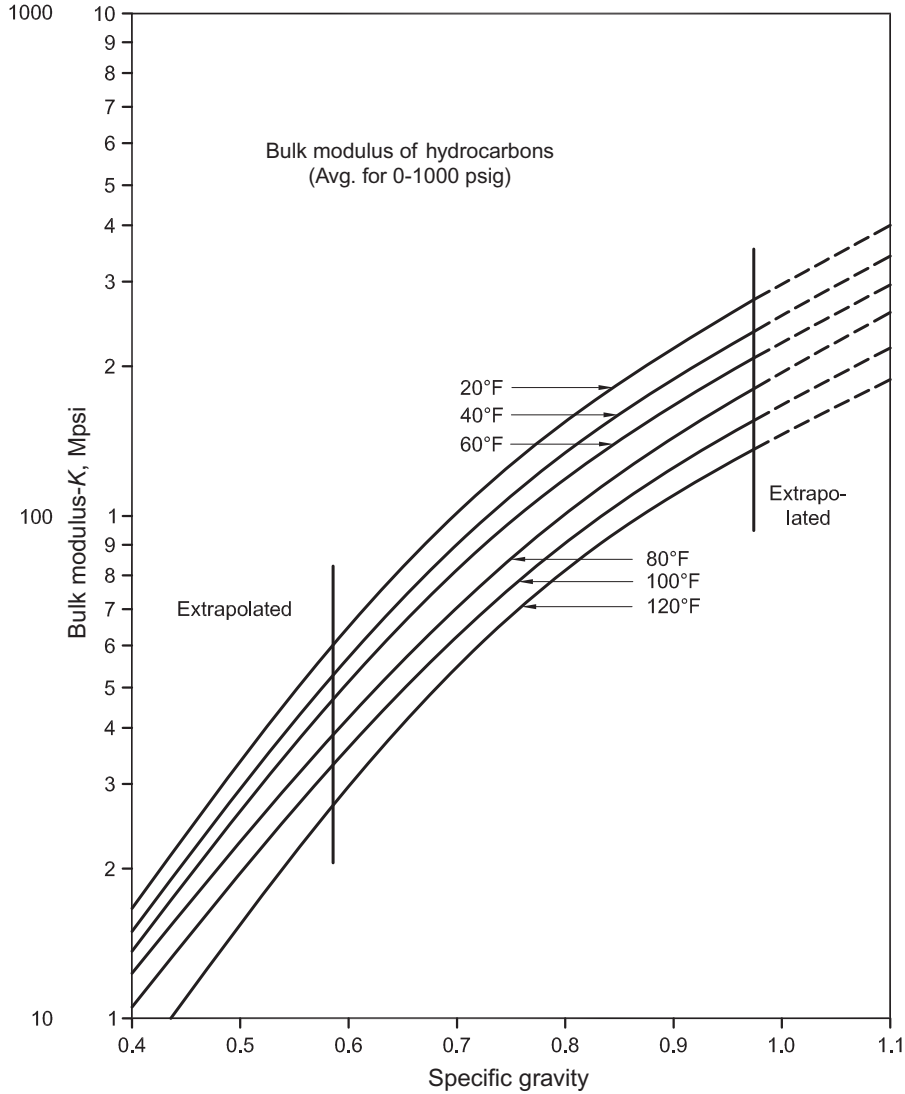

Figure 10.37 Bulk modulus of hydrocarbons.
(Replotted data from Petroleum P.O. Meter Code #1101, API)

10.11.4.7 Inductance

A second unit in the design of an acoustic filter is a choke tube. A choke tube or reduced pipe section is analogous to electrical inductance. Such an element opposes a change in flow rate. Electrical inductance is the element that opposes a change in current. Mechanical and acoustic inductance opposes changes in velocity. Once a mechanical mass is in motion, its inertia opposes a change in direction or velocity. Inductance delays and decreases a pressure or voltage rise or drop or, in effect, a

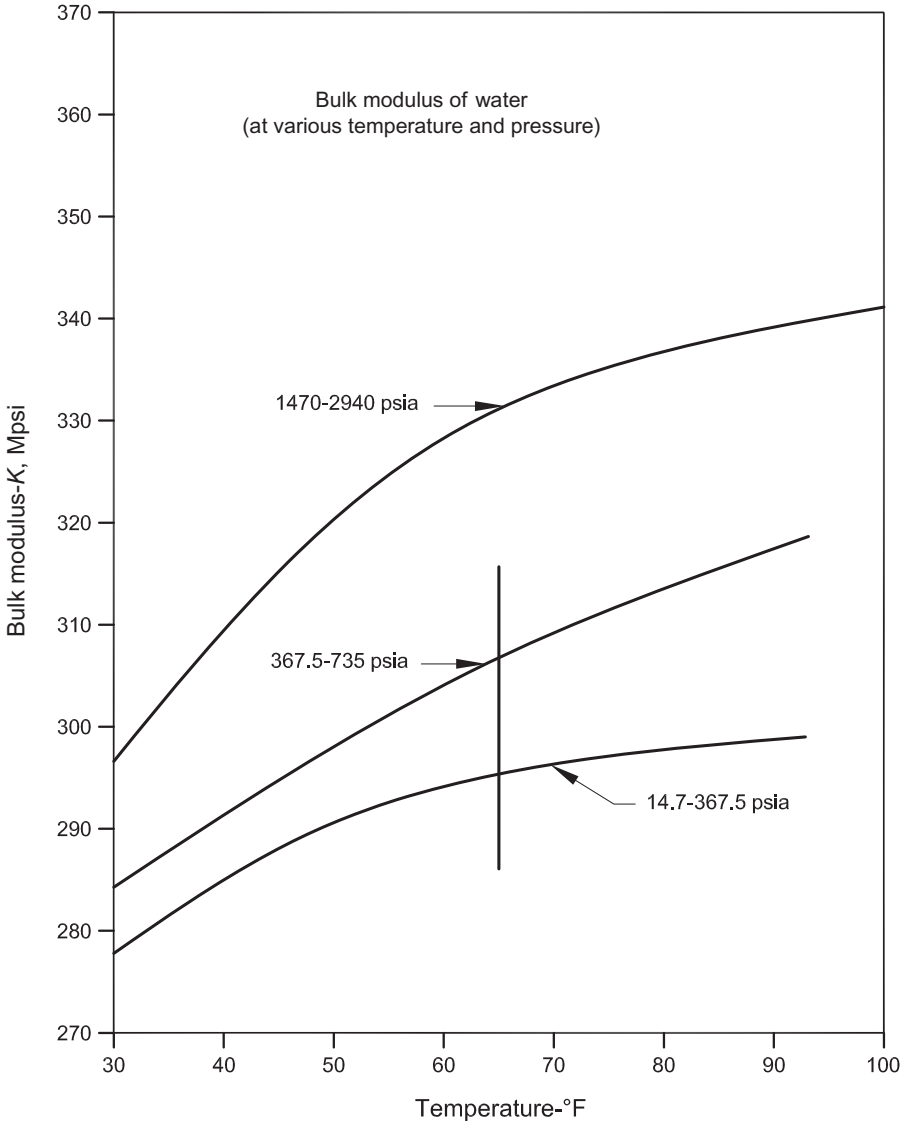

Figure 10.38 Bulk modulus of water.
(Replotted data from Handbook of Chemistry and Physics and Fluid Meters, Part 1, Figure 59, ASME)

change in flow velocity. Acoustic inductance of a circular tube in terms of the mass density is defined as follows:

$$L = \frac{\rho'}{gB} \tag{10.60}$$

where

L = acoustic inductance (lb-s^2/ft.^{5}),
ρ = fluid density (lb/ft.^{3}),
I = tube length (ft.),
g = gravitation constant,
=32.2 ft./s^2,
B = cross-sectional area of tube (ft.^{2}).

It would be possible, but not practical, to reduce a pressure pulsation to acceptable limits by throttling action alone. Examination of the acoustic inductance equation shows that the above could be accomplished by

- reducing the area B,
- increasing the length I,
- combination of both.

This has the desired effect of reducing the dynamic component of flow but could cause excessive pressure drop based on the steady-state component of the flow.

10.11.4.8 Resistance

A pipeline has a certain ability to impede the pressure buildup or surge in the line. This surge impedance is a pure resistance since the flow and pressure changes are in plane. Acoustic resistance is defined as follows:

$$R_A = \frac{P}{U} \tag{10.61}$$

where

R_A = acoustic resistance (lb-s/ft.^{5}),
P = pressure (lb/ft.^{2}),
U = volume flow (ft.^{3}/s).

The surge resistance of the pipeline can be obtained from the water hammer equation. In water hammer calculations, when considering rapid valve closure, the maximum pressure rise above the flow pressure is given as follows:

$$\rho = \frac{\rho c U}{g A} \tag{10.62}$$

where

P = pressure (lb/ft.^{2}),
ρ = fluid density (lb/ft.^{3}),
c = acoustic velocity (ft./s),
U = volume flow (ft.^{3}/s),
g = gravitational constant (ft./s^3),
A = cross-sectional area of pipe (ft.^{2}).

The acoustic resistance can then be stated as follows:

$$R_A = \frac{\rho c}{gA} \tag{10.63}$$

where the terms are previously defined.

10.11.4.9 Filter

A low-pass filter is a combination of capacitance, inductance, and resistance that passes pulsation with very little attenuation at all frequencies from zero to a certain design frequency, beyond which the pulsation is significantly reduced. Ludwig, in his paper, "Design of Pulsation Dampeners for High-Speed Reciprocating Pumps," combines the elements, acoustic capacitance, inductance, and resistance, into a low-pass filter equation that gives the amount of pulsation passed at different frequencies.

Ludwig's equation is expressed as

$$\frac{P_L}{P_0} = \left[\frac{1}{\left[\left(\frac{WL}{R_A}\right)^2\left(\frac{CR_A}{L}\right)^2 - 1\right] + \left(\frac{WL}{R_A}\right)^2\left(\frac{CR_A^2}{L}\right)^2}\right]^{0.5} \tag{10.64}$$

where

P_L = peak pulsating pressure at the line with volume chamber, choke tube, and resistance considered (psf),
P_0 = peak pulsating pressure without volume chamber and choke tube (psf),
$W = 2\pi f$,
f = frequency of pulsation being evaluated (cps).

All other terms are as previously defined.

This equation is in the form of the classical equation for vibration isolation. The ratio P_L/P_0 defines the transmission. A value of 1.0 means that 100% of the pulsation is passing through the filter. A value of 0.1 would mean that 10% is passing through the filter.

The equation reflects that transmission varies with frequency; thus, a transmission curve can be drawn by plotting P_L/P_0 against frequency. A proper choice of the elements making up the filter, the transmission of pulsation can be controlled to a desired value at the fundamental frequency. This may require evaluating several filter configurations. Design criterion generally used is to have the transmission P_L/P_0 equal to or less than 0.20 at the fundamental frequency of the pump. However, many successful filters have been designed with the transmission as high as 0.30% or 30%.

10.11.4.10 Pressure drop considerations

The major pressure drop that occurs in an acoustic filter is that which is attributable to the choke tube. Pressure losses considered are the summation of those due to flow through the choke tube, flow through bends or elbows that might be included in the

choke tube, entrance loss due to change in diameter between capacitance volume and choke tube, and exit loss due to change in diameter between choke tube and pipeline.

Consideration is given only to the steady-state component of the pulsation flow. This is analogous to considering only the electrical resistance of DC component in the AC system. Physical limitations, which can affect pressure drop, should be considered in the design of an acoustic filter. One is the physical size of the filter.

Since there is usually space or geometric limitations, in addition to higher cost for large capacitance volumes, it may be desirable to use smaller volumes if the contribution of the inductive element can be increased. The inductive effect can be increased by reducing flow area in the choke tube and/or lengthening the choke tube. Both of these changes contribute to a larger pressure drop.

Another way of decreasing capacitance volume is to increase the acoustic resistance, R_A, of the pipeline. This is done by making the pipeline smaller. Since it is desirable to have a good mismatch in diameter between the choke tube and flow line (a 1-to-2 ratio is a usual goal), a smaller choke tube will usually result in a larger pressure drop than desired. Usually decreasing the pipeline size for the purpose of increasing the acoustic resistance is a practical option only when the extra pressure drop can be tolerated and for a new installation where the designer has control over the pipeline size.

Example 10.17 *Acoustic filter design*

Given:
An acoustic filter is required for the discharge side of a 2×3.33 in. stroke, triplex pump.

Design data: Figure 10.39
Fluid: Hydrocarbons

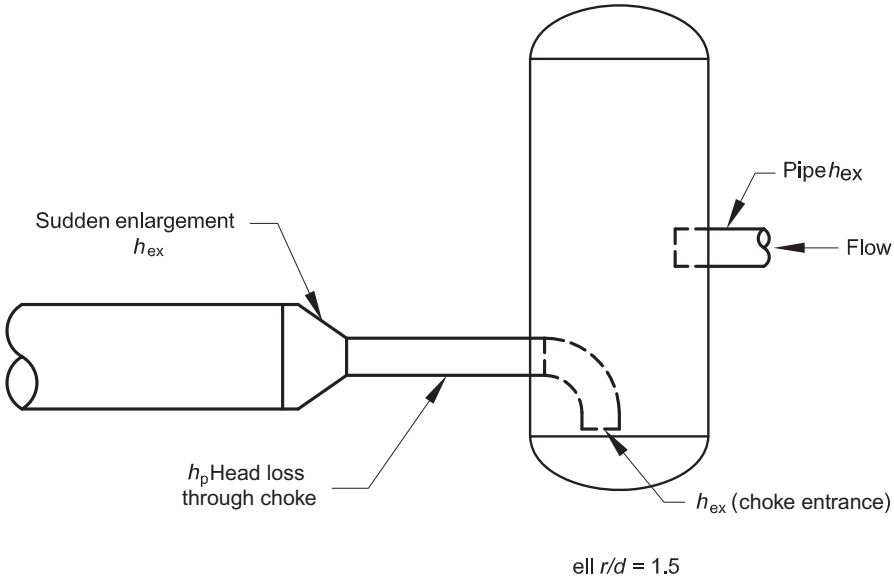

Figure 10.39 Example 10.17 acoustic filter design.

Specific gravity: 0.53
Viscosity: 0.09 cp at 1270 psia and 60 °F
Pipe size: 1½ in. (nominal)
Pipe schedule: 40
Pressure: 1270 psig
Pump efficiency: 90%
Pump speed: 274 rpm
Temperature: 60 °F
Choke tube: 1 in. (nominal) Schedule 40

Determine:
Design an acoustic filter that will attenuate the fundamental frequency to 20% or less of the input amplitude.

Solution:

Note: A list of terms is provided at the end of the solution.

(1) Determine the flow area of the pipe:

$$A = \frac{\pi D^2}{4}$$
$$= \frac{\pi(1.61 \text{ in.})^2}{4}$$
$$= 2.04 \text{ in.}^2$$

or

0.0141 ft.

(2) Determine the flow area of the tube:

$$B = \frac{\pi D^2}{4}$$
$$= \frac{(1.049 \text{ in.})^2}{4}$$
$$= 0.864 \text{ in.}^2$$

or

0.0060 ft.^{2}

Note: The choke tube flow area is approximately ½ of the pipe area. Experience indicates that this is a good and acceptable relationship between the choke tube and the pipeline flow areas for small-diameter lines.

(3) Determine the bulk modulus of the fluid.
From Figure 10.40

$$K = 35{,}000 \text{ psi}$$

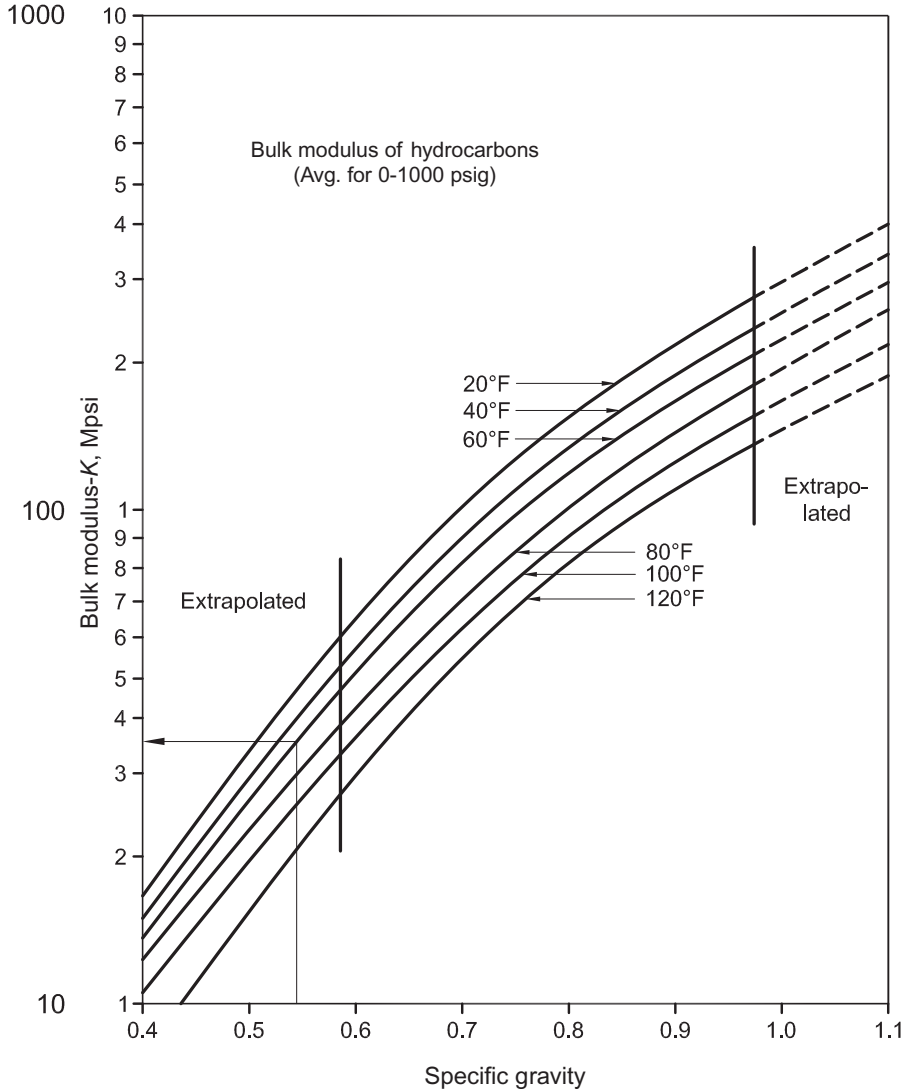

Figure 10.40 Bulk modulus of hydrocarbons.
(Replotted data; see Figure 10.37)

(4) Determine the "effective bulk modulus," K':

$$K' = \frac{K}{\left[1 + \left(\frac{KD}{Et}\right)(1-\mu)^2\right]} = 34{,}585 \text{ lb/in.}^2 \tag{10.65}$$

or

$$4.98 \times 10^6 \text{ in./ft.}^2$$

(5) Assume the dimensions for the filter and determine the volume.
For this example, choose a vessel that is 3 ft. long by 1 foot ID.

$$\begin{aligned} V &= \frac{\pi d^2}{4} \\ &= \frac{\pi(1 \text{ ft.})^2(3 \text{ ft.})}{4} \\ &= 2.356 \text{ ft.}^3 \end{aligned} \tag{10.66}$$

(6) Determine the density of the fluid:

$$\begin{aligned} \rho_n &= \rho_w \gamma_h \\ &= (62.4 \text{ lb/ft.}^3)(0.53) \\ &= 33.07 \text{ lb/ft.}^3 \end{aligned} \tag{10.67}$$

(7) Determine the acoustic velocity in the media:

$$\begin{aligned} c &= \left(\frac{K'g}{\rho}\right)^{0.5} \\ &= \left[\frac{(4.98 \times 10^6 0 \text{ lb/ft.}^2)(32.3 \text{ ft./}s^2)}{33.07 \text{ lb/ft.}^3}\right]^{0.5} \\ &= 2202 \text{ ft./}s \end{aligned}$$

(8) Determine the fundamental frequency for the pump:

$$\begin{aligned} f &= \frac{(rpm)(\#plungers)}{60s/\text{min}} \\ &= \frac{(274)(3)}{60} \\ &= 13.7 \text{ cps or hertz} \end{aligned} \tag{10.68}$$

(9) Determine the wavelength of the fundamental frequency.
This calculation is necessary to make sure that the choke tube will not resonate at the fundamental frequency or one of the lower order harmonics.

$$\begin{aligned} \lambda &= \frac{c}{f} \\ &= \frac{2202 \text{ ft./s}}{\text{cps}} \\ &= 160.7 \text{ ft.} \end{aligned} \tag{10.69}$$

(10) Choose a choke tube length.
The choke tube length must be much shorter than the wavelength and should seldom be longer than 4 ft. Assume a length of 2 ft.

Since the tube is open at both ends, it will resonate at 1/2 wavelength or to a sound wave 4 ft. long. The tube would resonate near the 40th harmonic (160.7/40), and there is little chance that a frequency at this level would generate enough energy to resonate.

If the tube resonated to a lower frequency, the length would be adjusted to detune it. For instance, a 2.25 foot tube would not resonate at any of the fundamental's harmonics. Therefore, the two foot high length is acceptable, but the 2.25 foot tube would be better.

$L = 2$ ft.

(11) Determine the flow rate capability of the pump (gpm):

$$Q = \frac{(90\%)(\textit{plunger area})\ (\textit{stroke})\ (\textit{rpm})(\textit{\#Plungers})}{231\ \text{in.}^3/\text{gal}}$$

$$= \frac{(0.90)\left(\frac{\pi(2\ \text{in.})^2}{4}\right)(3.33\ \text{in.})(274\ \text{rpm})(3)}{231\ \text{in.}^3/\text{gal}} \tag{10.70}$$

$$= 33.5\ \text{gpm}$$

(12) Determine the capacitance of the filter:

$$C = \frac{V}{K'}$$

$$= \frac{2.356\ \text{ft.}^2}{4.98 \times 10^6\ \text{lb/ft.}^2} \tag{10.71}$$

$$= 0.473 \times 10^{-6}\ \text{ft.}^5/\text{lb}$$

(13) Determine the inductance of the choke tube:

$$L = \frac{\rho L}{gB}$$

$$= \frac{(33.07\ \text{lb/ft.}^3)(2\text{ft.})}{(32.2\ \text{ft.}/s^2)(0.006\ \text{ft.}^2)} \tag{10.72}$$

$$= 342.3\ \text{lb} - s^2/\text{ft.}^5$$

(14) Determine the surge resistance of the pipe:

$$R_A = \frac{\rho C}{gA}$$

$$= \frac{(33.07\ \text{lb/ft.}^3)(2202\ \text{ft.}/s)}{(32.2\ \text{ft.}/s^2)(0.0141\ \text{ft.}^2)} \tag{10.73}$$

$$= 160{,}390\ s/\text{ft.}^5$$

(15) Determine the value of CR_A^2/L:
This is a term that appears in the low-pass filter equation.

$$\frac{CR_A^2}{L} = \frac{\left(0.473 \times 10^{-6}\ \text{ft.}^5/\text{lb}\right)\left(1.604 \times 10^5\ \text{lb} - s/\text{ft.}^5\right)^2}{342.3\ \text{lb} - s^2/\text{ft.}^5}$$

$$= 35.55$$

(16) Determine the value of w at the fundamental frequency:

$$w = 2\pi f$$
$$= 2\pi(3.7 \text{ hertz})$$
$$= 86.1 \text{ hertz}$$

(17) Sketch a frequency response curve using the low-pass filter equation and by changing the frequency intervals. This sketch will analyze the percent of pulsation passing through the filter for the various frequencies.

For the following example, the fundamental frequency (13.7 hertz) is used:

$$\frac{P_L}{P_0} = \left[\frac{1}{\left[\left(\frac{WL}{R_A}\right)^2\left(\frac{CR_A^2}{L}\right) - 1\right] + \left(\frac{WL}{R_A}\right)^2\left(\frac{CR_A^2}{L}\right)^2}\right]$$
$$= \left[\frac{1}{\left[\left(\frac{(86.1)(342.3)}{160.390}\right)^2(35.55) - 1\right]^2 + \left(\frac{(86.1)(342.3)}{160.390}\right)^2(35.55)^2}\right] \tag{10.74}$$
$$= 0.153$$

Tabulated values of frequency versus P_L/P_0 are

f	P_L/P_0
5	0.40
10	0.209
13.7 (fundamental)	0.153
15	0.140
20	0.104
25	0.081
30	0.066

Figure 10.41 shows that at 5 hertz, 40% of the pulsations are passing through the filter, whereas at the fundamental frequency, only 15.3% of the pulsations are passing through the filter. Thus, the fundamental pulse level is acceptable.

(18) Determine the pressure drop through the filter. This calculation is accomplished to avoid an excessive pressure drop:

$$\Delta P_T = h_p + h_{ent} + h_{en} + h_{ex} \tag{10.75}$$

(a) Determine the flow rate in ft.^{3}/s through the system:

$$U = \left(\frac{35.5 \text{ gal/min}}{60 \text{ s/min}}\right)\left(\frac{1}{7.45 \text{ gal/ft.}^2}\right)$$

(b) Determine the choke tube flow velocity:

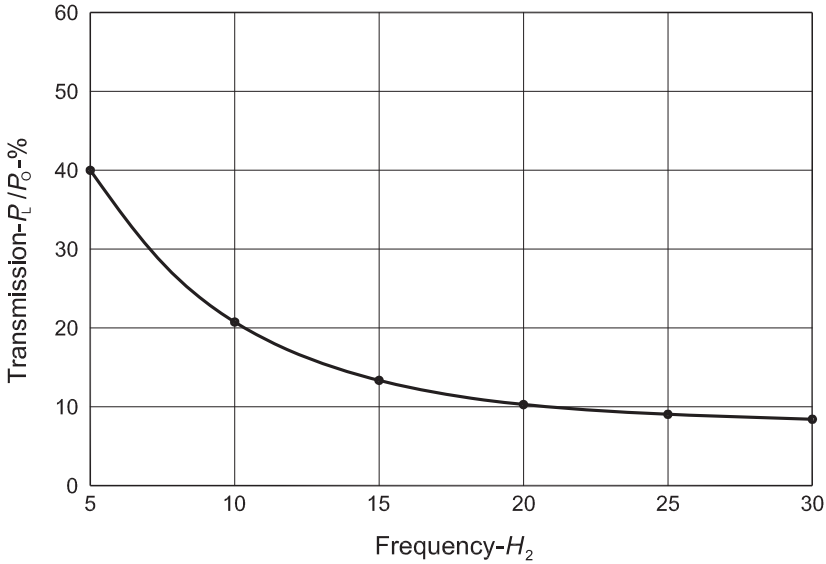

Figure 10.41 Pulsation transmission plot.

$$V = \frac{U}{B} = \frac{0.0746\ \text{ft.}^3/s}{0.0141\ \text{ft.}^2} = 5.29\ \text{ft.}/s \tag{10.76}$$

(c) Determine the friction factor for the choke tube.
First, the Reynolds number should be determined.

$$N_R = \frac{\rho V d}{ug} = \left(33.07\ \text{lb/ft.}^3\right)\ (5.29\ \text{ft.}/s)(1.049\ \text{in.})\left(\frac{1\ \text{ft.}}{12\ \text{in.}}\right) \tag{10.77}$$

Note: To convert centipoise to lb-s/ft.^{2}, multiply by 2.09×10^{-5}.
(a) Using Figure 10.42, determine friction factor:

$$f_f = 0.0235$$

(b) Determine head loss in choke tube pipe (h_p):

$$h_p = \frac{f_f v^2}{2gD} = \frac{(0.0235)\ (5.29\ \text{ft.}/s)^2(2\ \text{ft.})}{2(32.2\ \text{ft.}/s^2)(0.0874\ \text{ft.})} = 0.2337\ \text{ft.} \tag{10.78}$$

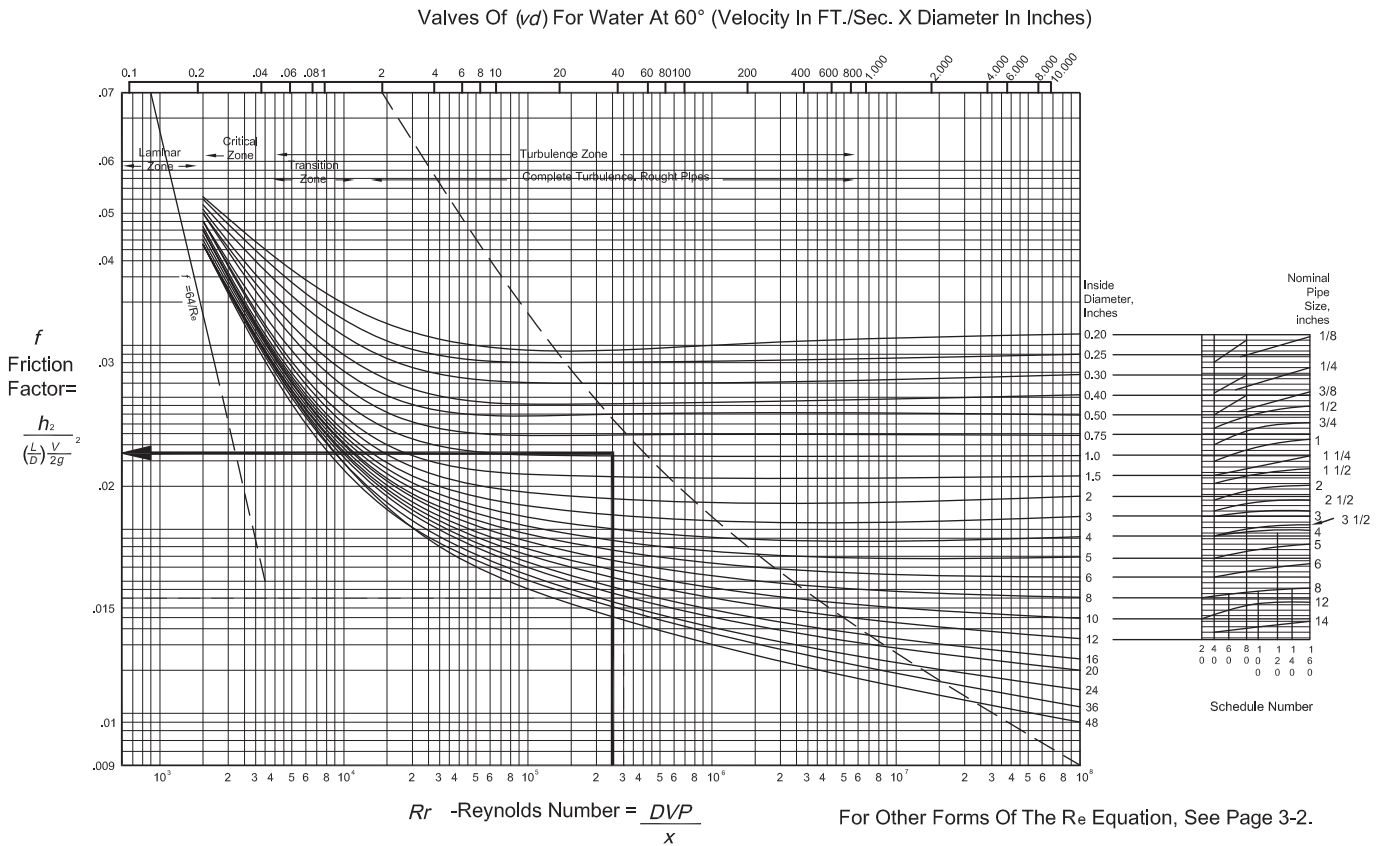

Figure 10.42 Friction factors for clean commercial steel pipe.
(Courtesy of Crane Company)

90° Pipe bends and
flanged or but welding 90° elbows

r/d°	K	r/d°	K
1	20 fr	8	24 fr
1.5	14 fr	10	30 fr
2	12 fr	12	34 fr
3	12 fr	14	38 fr
4	14 fr	16	42 fr
6	17 fr	20	50 fr

Figure 10.43 K-factor for ell fitting on choke tube.
(Courtesy of Crane Company)

(c) Determine head loss on the choke tube entrance since an ell is used on the choke tube entry:

From Figure 10.43 (page A-29 in Crane Technical Bulletin 410),

$$h_{\text{ent}} = \frac{14 f_{\text{f}} v^2}{2g} = \frac{(14)(0.0235)\ (5.29\ \text{ft.}/s)^2}{2(32.2\ \text{ft.}/s^2)} = 0.1430\ \text{ft. (each)} \tag{10.79}$$

Note: If a straight piece is used as a choke tube entrance, then

Determine the head loss of the entry pipe (h):

$$h_{\text{en}} = kv^2 \tag{10.80}$$

From Figure 10.44 (page A-29, Crane Technical Bulletin 410),

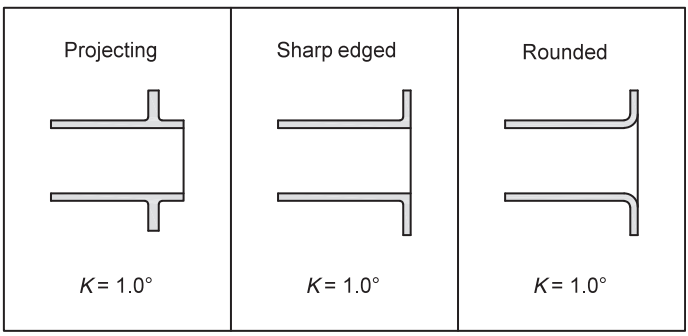

Figure 10.44 *K*-factor for pipe entering the filter chamber.
(Courtesy Crane Company)

$$
\begin{aligned}
k &= 1.0 \\
h_{en} &= \frac{kv^2}{2g} \\
&= \frac{(1.0)(52.9\,\text{ft.}/s)^2}{(2)(32.2\ \text{ft.}/s^2)} \\
&= 0.4345\ \text{ft.}
\end{aligned}
\tag{10.81}
$$

Determine the head loss of the exit pipe (h_{ex}):

$$
h_{ex} = \frac{kv^2}{2g} \tag{10.82}
$$

From Figure 10.45 (page A-29, Crane Technical Bulletin 410) (assume flush sharp-edge pipe),

$$
\begin{aligned}
h_{ex} &= \frac{kv^2}{2g} \\
&= \frac{(0.5)\ (5.29\ \text{ft.}/s)^2}{(2)\ (32.2\ \text{ft.}/s^2)} \\
&= 0.217\ \text{ft.}
\end{aligned}
\tag{10.83}
$$

Thus,

$$
\begin{aligned}
H_t &= 0.2337\ \text{ft.} + 0.1430\ \text{ft.} = 0.4345\ \text{ft.} + 0217\ \text{ft.} \\
&= 1.028\ \text{ft.}
\end{aligned}
$$

Pressure loss through the filter is

$$
\begin{aligned}
\Delta P &= H_T P_h \\
&= (1.028\ \text{ft.})\left(32.07\ \text{lb/ft.}^3\right)\left(\frac{1\ \text{ft.}^2}{144\ \text{in.}^2}\right) \\
&= 0.236
\end{aligned}
\tag{10.84}
$$

Since the pressure drop is very small, the filter design is satisfactory (Figure 10.46).

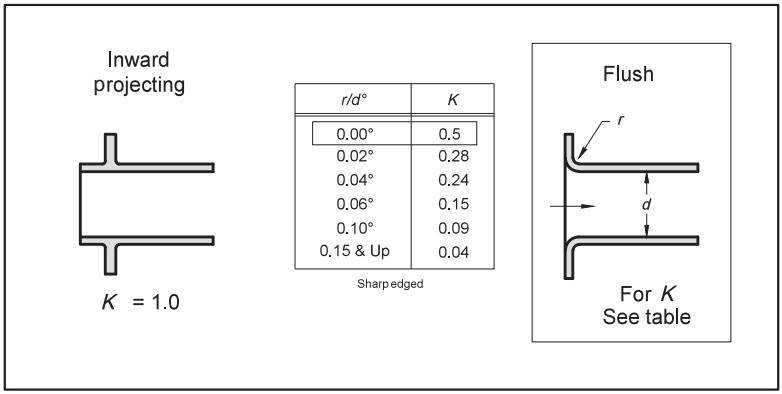

Figure 10.45 *K*-factor for pipe exiting the filter chamber.
(Courtesy Crane Company)

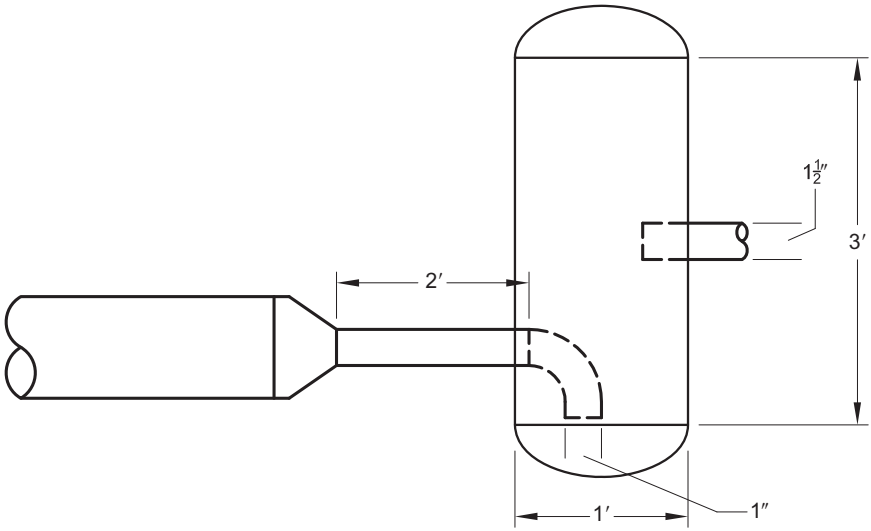

Figure 10.46 Acoustic filter dimensions.

10.12 Symbols and units

A = flow area of the pipeline (ft.^{2})
B = flow area of the choke (ft.^{2})
C = filter bottle capacitance (ft.^{5}/lb)
c = acoustic velocity (ft./s)
D = pipe inside diameter (ft. or in)
£ = modulus of elasticity (psi)
f = frequency (cps or hertz)
f_f = coefficient of friction (dimensionless)
g = acceleration of gravity (ft./s^2)
h_L = pipeline friction loss (ft.)
h = fitting head loss (ft.)
H_T = total head loss (ft.)
h_p = head loss in choke tube pipe (ft.)
h_{en} = entry pipe head loss (ft.)
h_{ent} = choke tube entrance head loss (ft.)
h_{ex} = exit pipe head loss (ft.)
K = liquid bulk modulus (psi)
K' = effective bulk modulus (psi or psf)
K = resistance coefficient (K_R in Crane Handbook)
L = choke tube inductance (lb-s^2/ft.^{5})
I = choke length (ft.)
N_R = Reynolds number (dimensionless)
P = pressure (psf)
P_L = pulse amplitude in pipeline
P_0 = input pulse level without filter
p = pressure (psi)

Q = flow rate (gpm)
R_A = pipeline surge resistance (lb-s/ft.^{5})
S = length of stroke (in.)
f = pipe wall thickness (in.)
U = flow volume (ft.^{3}/s)
u = viscosity (lb-s/ft.^{2})
V = bottle volume (ft.^{3})
v = choke tube velocity (ft./s)
p = fluid density (lb/ft.^{3})
ω = a factor = 2nf in cps used to evaluate frequency response to an inductance
A = wavelength (ft.)
Y = specific gravity (dimensionless)
μ = Poisson's ratio (dimensionless)

10.13 Review questions

1. (True/false) To determine the stress experienced by a given piping configuration, it is normally necessary to combine only the effects of internal pressure and thermal and weight stresses.
2. Given Figure 10.47, what is the stress due to weight? The pipe is 10 ft. above the ground.
3. Using the Tube Turn Method, what is the stress due to thermal expansion of the piping configuration in Figure 10.47? The pipe material is SA 106B. The maximum temperature of the oil is 350 °F and the minimum temperature is 70 °F. The piping code is ANSI B31.3.
   a. 3841 psi
   b. 16,946 psi
   c. 23,522 psi
   d. 37,683 psi
   e. 61,821 psi
4. Given Figure 10.48 and an allowable stress of 29,753 psi, what will be the stress if a 30% cold spring is applied and how much pipe will be cut?
   a. 8926 psi; 0.500 in.
   b. 11,981 psi; 0.350 in.
   c. 21,642 psi; 0.250 in.
   d. 23,802 psi; 0.468 in.
   e. 26,813 psi; 0.265 in.
5. Given Figure 10.49, determine if a formal stress analysis is required.
6. Given Figure 10.50 and using the quick check method, determine if the piping configuration is adequately stressed for flexibility.
   a. Yes
   b. No
   c. Need more information
7. Given Figure 10.51 and using the quick check method, what is the minimum length of equal legs?
   a. 6 ft.
   b. 10 ft.
   c. 12 ft.
   d. 18 ft.
   e. 24 ft.

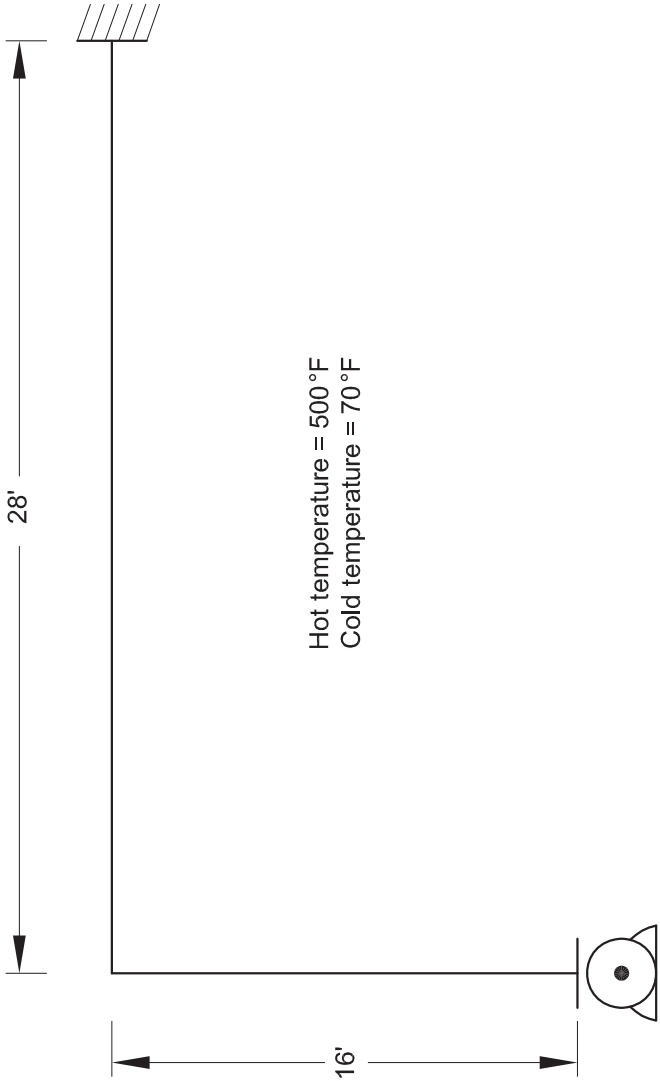

Figure 10.47 Question 2.

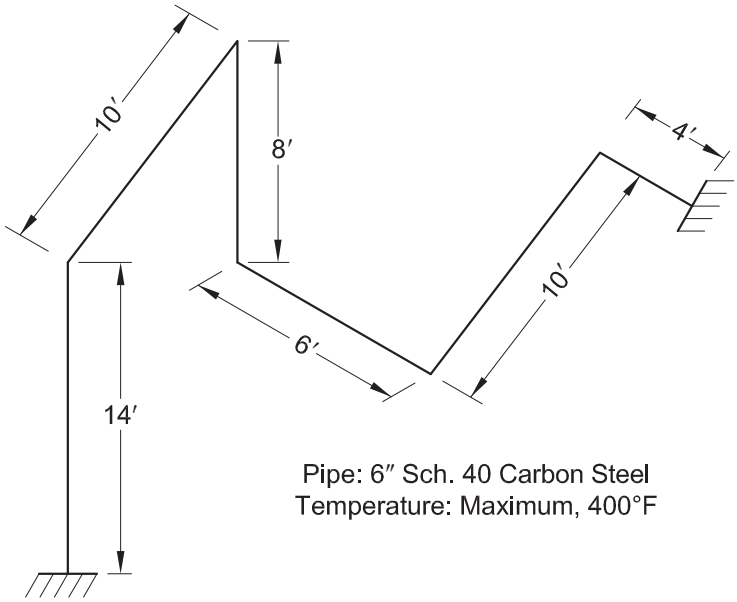

Figure 10.48 Question 4.

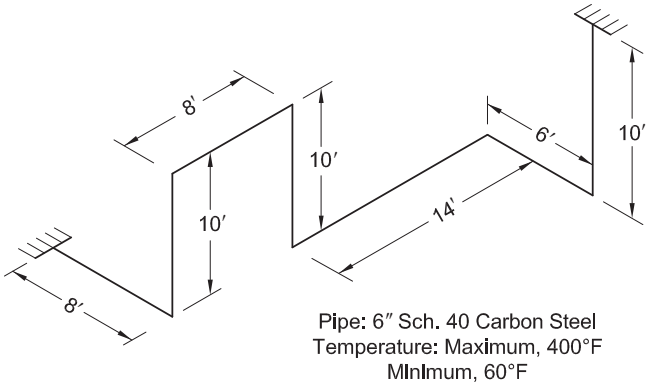

Figure 10.49 Question 5.

8. What would be the maximum length of L for the minimum length of the equal legs in Question 7?
a. 25.61 ft.
b. 31.85 ft.
c. 39.91 ft.
d. 42.86 ft.
e. 53.73 ft.

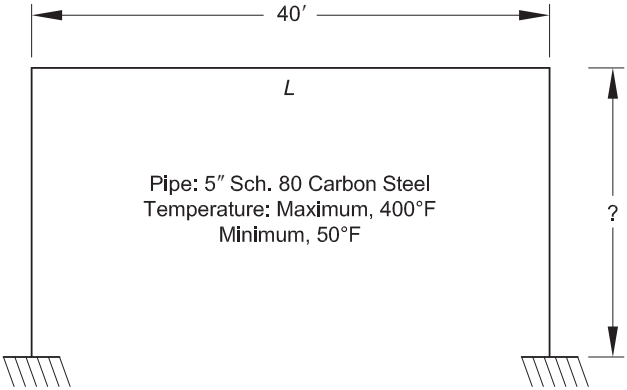

Figure 10.50 Question 6.

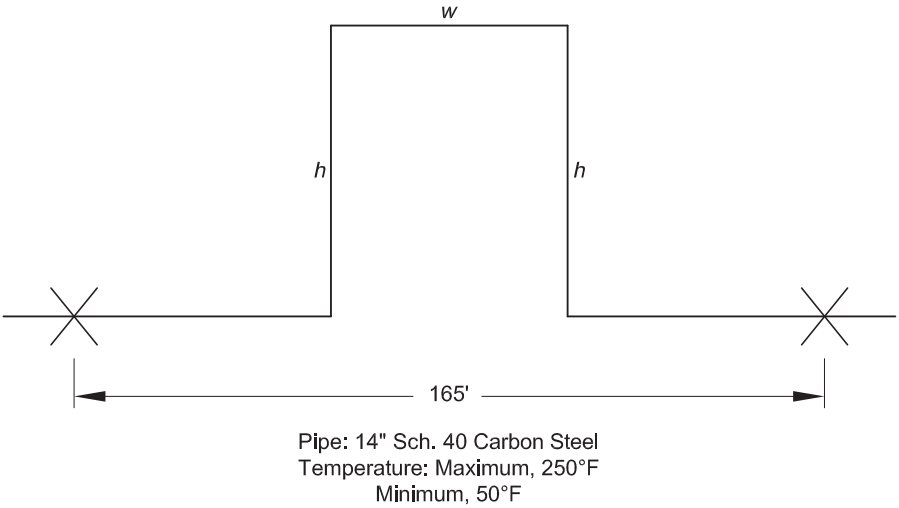

Figure 10.51 Question 7.

9. Given the expansion loop in Figure 10.52 and using the quick check method, what will be the minimum lengths for W and h?

W	***h***
a. 6 ft.	21 ft.
b. 9 ft.	35 ft.
c. 10 ft.	20 ft.
d. 18 ft.	40 ft.
e. 7 ft.	14 ft.

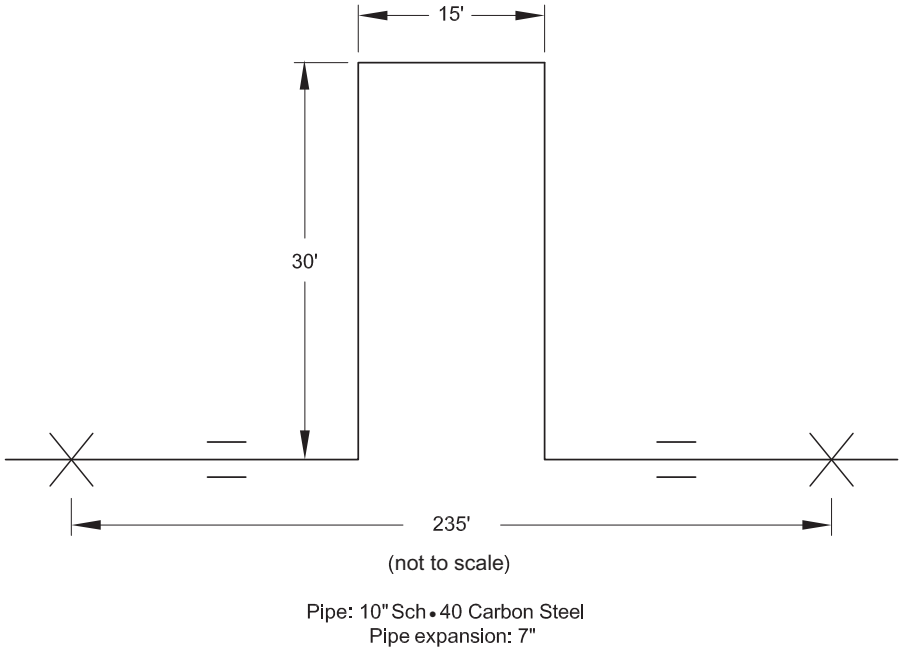

Figure 10.52 Question 9.

10. Given Figure 10.52, what is the force, F, and the maximum stress, S, at each anchor?

F	*S*
a. 6014 lbs	3784 lbs/in.^{2}
b. 2746 lbs	23,553 lbs/in^2
c. 3512 lbs	39,413 lbs/in^2
d. 6049 lbs	31,051 lbs/in^2
e. 10,071 lbs	21,302 lbs/in^2

11. A reciprocating compressor surge bottle
- **a.** reduces the back pressure against which the compressor must discharge
- **b.** provides capacitance for pulsation control
- **c.** reduces the horsepower required for compression
- **d.** should be centered on the compressor cylinder, if possible
- **e.** All of the above

12. (True/false) The ExxonMobil Equation, without modification, should not be used for calculating an acceptable pulse level for a reciprocating compressor ratio is very low.

13. List four methods of reducing pipe motion in reciprocating pump and compressor systems.
- **a.**
- **b.**
- **c.**
- **d.**

14. What is the acceptable pulse level for a reciprocating compressor with a design pressure of 450 psia using the ExxonMobil Equation?
a. 4.61%
b. 3.02%
c. 2.53%
d. 1.96%
e. 0.85%

15. Given the following data, what would be the dimensions for a reciprocating compressor surge bottle?
Operating temperature = 285 °F
Operating speed = 1100 rpm (2 strokes per revolution)
Operating pressure = 450 psia
Gas compressibility factor = 0.942
Compression ratio = 3.6
Cylinder capacity = 6.5 MSCFD
Pressure base = 15.025 at 60 °F

D	*L*
a. 1.00 ft.	2.0 ft.
b. 1.25 ft.	2.5 ft.
c. 1.50 ft.	3.0 ft.
d. 2.00 ft.	4.0 ft.
e. 2.50 ft.	5.0 ft.

16. (True/false) To allow for mechanical stress, always use nozzles one schedule higher than required for pressure in reciprocating compressor surge bottle fabrication.

17. A gas-filled chamber that is used to suppress pulsation in reciprocating pump piping is called a _____
a. surge bottle
b. liquid acoustic filter
c. pulsation dampener
d. liquid absorber
e. chamber filter

18. The general design criterion for the liquid acoustic filter is to have the transmission ratio equal to or less than _____
a. 1.0 at the peak amplitude
b. 0.2 at the fundamental frequency
c. 0.1 at the complex frequency
d. 0.5 at the 5th harmonic
e. 0.1 at the peak-to-peak amplitude

19. Given the following data, what is the transmission ratio (P_L/P_0) for the water acoustic filter?
Given:
Pump = triplex
Pump capacity (90%) = 50 gpm
Water temperature = 80 °F
Operating pressure = 500 psia

Pump speed = 350 rpm
Water density = 65.5 lb/ft.^{3}
Pipe diameter = 2.067 in.
Wall thickness = 0.154 in.
Pipe area = 0.023 ft.^{2}
Area of choke tube = 0.006 ft.^{2}
Choke tube length = 3 ft.
Filter volume=7.88 ft.^{3}

a. 0.5832
b. 0.1162
c. 0.2000
d. 0.0986
e. 0.1701

20. If you wanted to use the maximum recommended transmission ratio for liquid acoustic filters calculated in Question 19, you would _____.

a. decrease the size of the filter
b. increase the size of the filter
c. not do anything because the ratio is already out of limits
d. increase the filter diameter
e. none of the above

Further Reading

[1] K.E. Arnold, M.I. Stewart, Surface production operations, in. Design of Gas-Handling Systems and Facilities, vol. 2, Elsevier, Boston, Mass, 1999. Chapter 13-Pressure Relief.
[2] K.E. Arnold, M.I. Stewart, Petroleum Engineering Handbook, in: Facilities and Construction Engineering, vol. III, Society of Petroleum Engineers, Houston, Texas, 2007, Chapter 10-Safety Systems.
[3] API Standard 574, Standard Specification for Inspection Practices for Piping System Components, second ed., API, Washington, DC, 1999.
[4] B. Wilson, Detail Engineering and Layout of Piping Systems, second ed., Titles on Demand, Norwich, 2010. ISBN 928-1-926633-18-3.
[5] R.A. Parisher, B.A. Rhea, Pipe Drafting and Design, third ed., Gulf Professional Publishing, Houston, Texas, 2012.
[6] C. Becht IV, Process Piping: The Complete Guide to ASME B31.3, third ed., ASME Press, New York, 2009.
[7] D.R. Sherwood, D.J. Whistance, The Piping Guide, Syentek Book Company, San Francisco, CA, 1991.
[8] Piping Engineering, Tube Turns Inc., sixth ed., Boston, Mass, 1986.
[9] L.C. Peng, T.-L. Peng (Alvin), Pipe Stress Engineering, ASME Press, New York, 2009.
[10] B. Silowash, Piping Systems Manual, McGraw Hill, New York, 2010.

Pipeline systems

11

11.1 Overview

Pipelines in the oil and gas industry are used for a variety of purposes such as

- gathering two-phase flow from individual wells and delivering the production to a central gathering station for processing;
- transporting crude from fields to tank farms for tanker transportation;
- moving crude from field processing facilities and supply points to refineries and other end users;
- moving gas from gas conditioning and processing plants and from these plants to LNG, LPG, and other facilities;
- distributing petroleum products from refineries and petrochemical plants to the distribution centers.

Pipelines are generally classified as either gathering or transmission pipeline systems.

The gathering pipeline system is a series of pipelines that flow from the field well production facilities to a gathering "trunk" pipeline. Gathering systems generally fall into one of the following categories:

- Single-trunk systems with "lateral" lines from each well production facility
- Loop systems, in which the main line is in the shape of a loop around the field
- Multiple-trunk system, in which there are several main lines extending from a central point
- Combinations of the above

The selection of the most desirable configuration requires an economic study, which would require one to consider many variables such as

- type of reservoir,
- size and shape of reservoir,
- flowing and shut-in pressure and temperature,
- topography of the location (mountains, offshore, arctic, etc.),
- destination of the product.

Gathering systems are normally small-diameter pipes that run over relatively short distances. The branch lateral lines are commonly in the 2-8 in. (5-20 cm) range. As with all piping systems, an economic analysis should be made between the diameter of the pipeline and the mechanical horsepower (pumps/compressors) required to move the fluid volume through the system. A larger diameter pipe will result in less mechanical horsepower required, while a smaller pipe diameter will require more mechanical horsepower. One should follow the guidelines provided in Chapters 6 and 7 to determine the pressure drop and line size.

Surface Production Operations. http://dx.doi.org/10.1016/B978-1-85617-808-2.00011-0
Copyright © 2016 Elsevier Inc. All rights reserved.

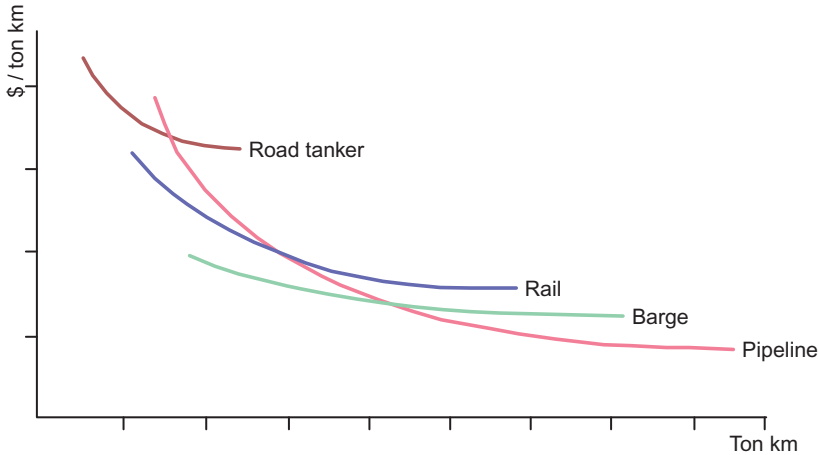

Figure 11.1 Unit cost curves for various transportation methods.

Cross-country transmission pipelines collect product from one or more "supply" sources and "deliver" to the end user. Transmission pipelines are generally classified into the following three general categories: natural gas, crude oil, and "product." Natural gas transmission pipelines can only carry natural gas. Crude oil transmission pipelines carry unrefined crude oil from producing areas to large storage areas or directly to refineries or petrochemical plants. Product transmission pipelines may carry a number of processed or refined petroleum products such as processed natural gas liquids (e.g., butane and propane, gasoline, diesel, and refined fuel oils).

Pipelines can be used over a range of volumes and distances. However, for very short distances and small volume or seasonal demand or for very long distances, a pipeline is usually not cost-effective. Figure 11.1 shows the unit cost curves for various alternatives.

Pipelines are most cost-effective for higher ranges of barrels/mile (ton/km). For small volumes and/or for short distances, pipelines are not very economical; in such cases, other alternatives should be considered. Generally, pipelines have the following advantages over other modes of transportation:

- Low unit cost ($/bbl/mile)($/ton/km)
- High reliability (e.g., immunity to weather conditions)
- Safety (low number of incidents/mile/year)
- Low environmental impact, including low spillage
- High land utilization (e.g., multiple lines in one right-of-way)

Pipelines usually offer the most cost-effective solution for the volumes and distances encountered in upstream oil and gas operations. When compared with other forms of transportation, pipelines are considered one of the safest forms of transporting oil and gas. Figure 11.2 illustrates the relative safety records of pipelines in North America.

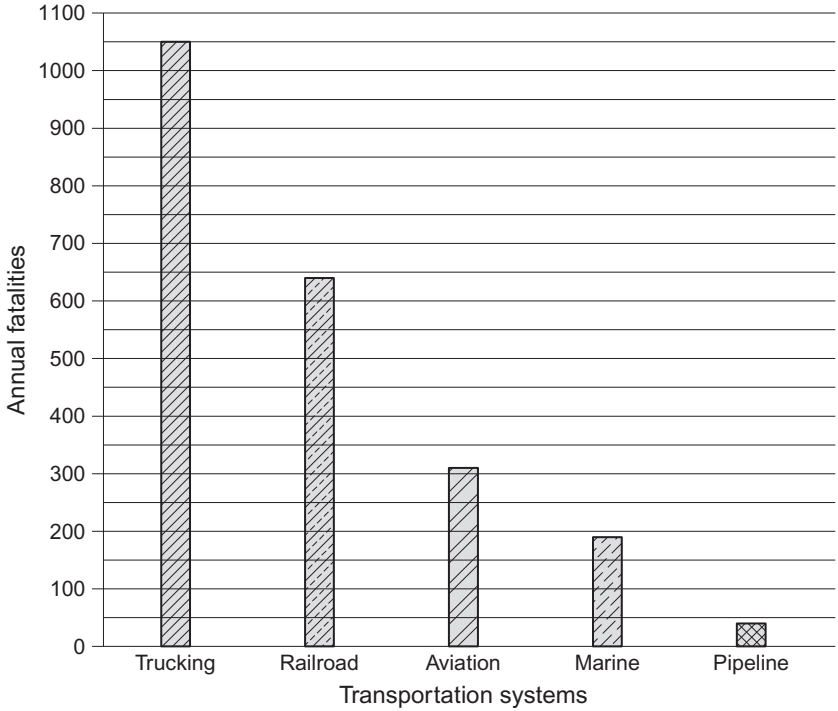

Figure 11.2 Relative safety record of pipelines in North America.

11.2 Phases of pipeline projects

Many factors must be considered when designing, building, and operating a pipeline system. Once installed, a pipeline offers no flexibility to change inlet or outlet point. Although operational expenses (OPEXs) are low, pipelines are relatively expensive to install and usually take 2-3 years to become operational. Furthermore, a pipeline has only limited flexibility with respect to throughput changes.

Due to the high capital cost coupled with long lead time, a pipeline project typically progresses through a series of phases. Each phase requires careful analysis of technical and economical considerations.

A typical pipeline project consists of the following phases:

- Feasibility study phase
- Conceptual design phase
- Detailed design phase
- Construction phase
- Commissioning phase

Figure 11.3 illustrates a typical project schedule. A typical pipeline project takes 2-3 years from the project initiation until the pipeline is commissioned and operational.

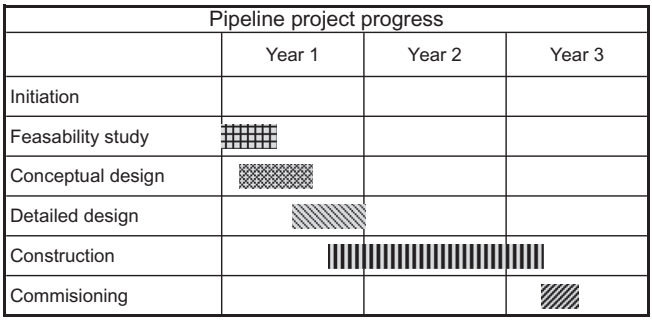

Figure 11.3 Typical pipeline project schedule.

This time frame is dependent upon the magnitude and location of the project. The following is a brief overview of the phases of pipeline projects.

11.2.1 Feasibility study phase

A pipeline project begins with the feasibility study. The objective of the feasibility study is to investigate and establish whether a prospective project merits further consideration. This phase is usually initiated by the sponsor department, with engineering, cost, and market specialists playing significant roles.

Several alternative engineering options are typically developed. Each option is fully evaluated with respect to the following:

- Physical, technical, and regulatory constraints
- Project options
  - Advantages and limitations
  - New/novel techniques required
  - Potential problem areas
  - Resource requirements
- Areas requiring additional data
  - Technical risk evaluation
  - Capital and operating cost estimates (accuracy =/− 30%)

Preliminary design at this level is limited to system layout, capacity requirement, calculation of preliminary pipe diameter and wall thickness, material selection, and corrosion protection. In offshore projects, the method of installation is also identified.

11.2.2 Conceptual design phase

In the conceptual design phase, a detailed cost estimate is developed. It is used to prepare a firm budget proposal that serves as the basis for final investment decision. It is based on an estimate of material, construction, operating, and maintenance costs. At this phase, the estimate for capital cost is refined to ±15% accuracy.

Operating costs are often modeled as a percentage of capital costs plus a variable charge based on per barrels of oil or cubic feet of gas throughput rate.

11.2.3 Detailed design phase

The detailed design phase begins once the final approval is given for the project to proceed. The design of a pipeline is a complicated process involving computer analysis and is usually performed by in-house specialists, engineering design consultants, or pipeline contractors. As a minimum, pipeline design includes the following:

- Route selection and survey
- Environmental impact and risk assessment
- Corrosion and material selection
- Coating selection
- Mechanical pipeline design
- Hydraulic analysis and line sizing

11.2.3.1 Route selection and surveying

Onshore pipeline routes are surveyed by aerial photography and surface mapping, which are performed during the conceptual design phase. The final route is selected to optimize design and construction coupled with being the most cost-effective with minimal environmental impact. The following factors are taken into consideration when selecting a pipeline route:

- Safety of public
- Safety of construction and operations personnel
- Protection of the environment
- Protection of other properties and facilities
- Geothermal and hydrographic conditions
- Requirements for construction, operation, and maintenance
- National and local requirements
- Terrain features, topography, and population centers
- Economic considerations

After the pipeline route has been selected, a detailed site survey is made, and the route is staked with firmly fixed markers.

Offshore pipeline route selection should include the following additional considerations:

- Shore approach
- Nature of the seabed
- Avoidance of obstructed or rocky zones
- Sea traffic
- Undesirable bottom features
- National sovereignty considerations

11.2.3.2 Environmental impact and risk assessment study

Major environmental impact and risk considerations should be assessed when selecting the pipeline route. Both short-term and long-term environmental impacts need to be considered. Short-term impact involves damages during the construction phase, while long-term impact considers the presence of the pipeline during its

operational life and potential loss of fluid as a result of an accident or pipe rupture. The study is normally contracted out to a consulting company that specializes in environmental impact studies.

11.2.3.3 Corrosion and material selection

Material selection is usually decided during the conceptual design phase but revisited during the detailed mechanical design phase.

The most commonly used pipeline material is metallic. Nonmetallic materials, such as GRP/GPE, may be cost-effective for specific low-pressure operations, especially when transporting corrosive fluids.

11.2.3.4 Coating selection

All metallic buried pipelines need to be coated externally by a suitable anticorrosion coating, supplemented by cathodic protection. The type of coating depends on operating temperature. The common coating types are the following:

- Polyethylene (PE) (may be used up to 60 °C).
- Fusion bonded epoxy (FBE) (may be used up to 70 °C).
- Higher temperature coatings are available but at significantly increased cost.

In offshore applications, asphalt enamel corrosion coating is often used, especially in combination with concrete weight coating.

11.2.3.5 Mechanical pipeline design

During the detailed design phase, the same parameters considered in the conceptual study phase are reexamined, but in greater detail. The deliverable of the detailed design phase is the tender documents. These documents contain the following:

- All basic project data
- Design data
- All specifications
- Material list
- All fabrication and construction phase drawings
- Company requirements, such as
  - operational philosophies,
  - know-how,
  - standards,
  - practices,
  - procedures,
  - contractual information.

11.2.4 Pipeline construction phase

Once the detailed design is completed and approved, and a contractor is selected and mobilized, the construction phase begins. Since material procurement and certain

other project requirements have long lead times, some activities usually commence before the design is complete. These jobs may include the following:

- Material procurement
- Permits for right-of-way
- Site preparation
- Civil works

During the pipeline construction phase, the contractors carry out all the activities associated with the construction and precommissioning of the pipeline.

The scope of the construction varies, depending on the magnitude of the project and upon whether it is onshore or offshore. Typical onshore pipeline construction follows a sequence of activities, which include the following:

- Right-of-way clearing
- Topsoil stripping
- Trenching and rock blasting
- Stringing and pipe bending
- Welding and inspection
- Pipeline coating
- Lowering in
- Backfilling and cleanup
- Water, road, or rail crossings
- Testing and precommissioning

Typical offshore construction projects include the following activities:

- Landfill construction/shore approach
- Pipe laying by barge or other methods
- Riser installation
- Tie-in
- Submarine protection
- Testing

11.2.5 Pipeline commissioning phase

The pipeline commissioning phase follows the completion of pipeline construction. Commissioning is the initial start-up period, during which the pipeline system is checked and tested. Performance of the entire system is checked against all specified operating conditions per the pipeline specifications and design. Depending on the product to be transported, several operating parameters are monitored during the commissioning period to ensure, for example, that no hydrate formation takes place in gas pipelines or that the corrosion rate will remain within the design limit.

11.3 Pipeline mechanical design

11.3.1 Pipe selection and wall thickness

Steel pipe is required in the majority of oil and gas production and pipeline applications. ASME A53 and A106 and API 5L seamless, electric resistance welding (ERW),

and submerged arc welding (SAW) steel pipe are commercially available and most commonly used in pipeline systems. PVC, fiberglass, polypropylene, and other materials may be used in low-pressure and utility applications. ASME B31.4 and B31.8 allow the use of alternate materials in very restricted applications. Seamless pipe is seldom used in pipeline applications because of the higher cost and limited availability. From a design and regulatory perspective, pipe made with ERW and SAW seams is equivalent to seamless pipe and is less costly. Note: This is not true for piping systems designed in accordance with ASME B31.3.

For high-pressure pipeline, high-grade pipe, such as API 5L grades X42, X52, X60, and X65, is selected because much thinner wall pipe can be used, which significantly reduces pipe costs. Construction cost savings also are realized, as the welding time is reduced and material shipping/handling costs are reduced.

11.3.2 Material selection

Pipe fittings, flanges, valves, and appurtenances must meet the specification and pressure class of the pipe selected for each pipeline application. The materials used in pipelines conform to the following industry codes and standards: ASME standard B16.5, ASME standard B16.9, ASME B31.4, ASME B31.8, ASME standard A105, ASME A106, ASTM standard A234, ASTM standard A420, and MSS SP-75. Pipe fittings can be matched to the higher grade API 5L, X grade pipe. Detailed material information is discussed in Chapter 4.

11.3.3 Route selection and survey

Route selection is a very important aspect in successful pipeline design. To make a proper selection, one must carefully study the terrain, any natural obstacles such as mountains, swamps, marshland, streams, rivers, and mudslide areas; manmade barriers such as highways, roads, railroads, and buildings; and projected population density in the vicinity of pipeline route. Topographic maps, aerial photography, and satellite imagery coupled with physical inspection of the site are all required when choosing the route.

Another important consideration when selecting the pipeline route is the constructability of the pipeline. For example, the minimum pipeline construction working right-of-way (ROW) for a 2 in. (50 mm) pipeline is 35-40 ft. (11.5-13 m) in width, and the area should be somewhat level. Larger diameter pipe requires wider ditches and wider ROW because the larger pipe requires larger pipe-handling equipment and wider ditches. Typically, 80-100 ft. (24-30 m) wide construction working ROWs are typical for 12 in. pipe (300 mm) and 200 ft. (61 m) plus construction ROW widths for pipe up to 30-36 in. (760-915 mm). Once the proposed route has been determined, it must be surveyed to determine the exact length, physical terrain, natural and manmade barriers located, and verification of property boundaries. Once a proposed route is confirmed, the acquisition of the ROW and regulatory permits can begin.

Gathering and transmission pipelines have to purchase the ROW, or right of use and easement, that is required for the pipeline system. In most instances, easements,

which grant the pipeline owner the right to operate and maintain the pipeline and appurtenant facilities, are purchased. In some cases, the ROW may be purchased "in fee" where the easement is acquired as a property.

11.3.4 Regulatory permits

Permits must be acquired from the authorities having jurisdiction to install pipelines across public highways, roads, streets, and any other public conveyance. Special permits from railroads and other pipelines may also be required.

ASME B31.4 and B31.8 stipulate specific design requirements for pipe installed across highways, roads, streets, and railroads. Heavier wall pipe (required because of lower design factors), casing, hydrostatic testing, nondestructive testing, and other special requirements are stipulated in the applicable industry codes and standards.

11.3.5 Environmental considerations

Many countries have laws and regulations that protect the natural resources. Significant sites, archaeological sites, endangered species, etc., require investigation before finalizing the route selection. Special permits must be acquired to work in and around sensitive areas. Generally, pipelines cannot be constructed in certain defined wetlands, marshes, swamps, rivers, creeks, or streams where the pipeline installation and operation could affect sensitive ecologies and environments.

11.3.6 Corrosion prevention and coatings

Pipelines and pipeline facilities must be protected from the effects of both internal and external corrosion. Industry codes and standards require that pipelines, appurtenances, and facilities be protected from the effects of corrosion. NACE has standards prescribing the corrosion protection required for pipelines, specifically, NACE Standard MR01-76, RP-200, and RP-572. Nonferrous piping materials, such as fiberglass, PVC, and polypropylene, do not undergo the same corrosive effects and require little attention.

Internal corrosion can be caused by CO_2 in the presence of water and H_2S in the presence of water, completion fluids, acids, and oxygen. Certain types of bacteria found in producing formations can also cause internal corrosion. A chemical analysis will identify if corrosion will be a problem.

External corrosion affects both aboveground and belowground (buried) pipe.

Aboveground pipe is subjected to atmospheric corrosion and galvanic actions. Bare steel exposed to moisture, salt, chemicals, heat, cold, and oxygen will corrode rapidly. Piping and equipment exposed daily to the elements must be protected with coatings. Good paint coating systems, such as epoxies, and regular maintenance will normally provide adequate protection to the aboveground facilities. Facilities exposed to severe service, such as offshore, may require more extensive protection systems.

Buried pipe is subjected to cathodic actions and galvanic actions. Ferric soils have small electrical potentials. In the natural process of converting metals back to their elemental or native state, electrolytic conduction takes place. Unprotected, the steel pipe becomes an anode (positively charged) and transfers material, by means of electrons, to the cathode (negatively charged) material, which is the soil or surrounding medium. The pipe metal literally flows away by means of the electric current between the anode and cathode. Water contained in the soils and other media serve as the electrolytic to help promote the electron transfer.

To counteract cathodic actions, pipe is coated with anticorrosive materials and cathodic protection, which are placed on the pipelines. The coating must provide an effective "insulation" against the environment but must be tough enough to withstand the operating temperatures, be resistant to the soil, and withstand physical handling. There are a number of coating systems that are commercially available, such as extruded systems (polyethylene or polypropylene over asphalt mastic or butyl adhesives), tape coats (polyethylene, polyvinyl, or coal tar over butyl mastic adhesive), FBE (thin film), and coal tar epoxy. FBE coatings are the most popular coating systems because they

- are excellent insulators;
- are hydrocarbon-, acid-, and alkali-resistant;
- unaffected by temperature;
- do not require a primer;
- can be applied over finished welds (field joint).

Tape coating systems and coal tar systems are becoming used less frequently. Tape coating is difficult to apply and is difficult to use on large-diameter pipe. A number of tape-coated systems have experienced failures over relatively short spans of time because of improper application. Coal tar epoxy is becoming less desirable because of some health and environmental concerns caused during application.

In addition to coatings, cathodic protection systems are also used to protect the pipeline where breaks in the coating system may occur. Cathodic protection systems use either sacrificial anodes or impressed current to protect the underground pipe. Cathodic protection reverses the electrolytic conduction process by using either a metal object (sacrificial anode) or impressed current to make the pipe a cathode.

In the sacrificial anode system, sacrificial anodes are made of a higher potential metal, such as magnesium or zinc, that is in contact with the pipe and the surrounding medium. The anode gives up its electrons (metal) in place of the steel pipe. Onshore pipelines normally use magnesium, while offshore pipelines use zinc or aluminum anodes. Sacrificial anode systems are simpler and are less expensive than impressed current systems.

In the impressed current system, impressed current reverses the natural flow of electrons from the pipe to the surrounding medium to prevent the loss of metal ions. Impressed current systems are much complex and require external power sources and AC/DC power inverters or rectifiers to provide the current to the pipe.

11.4 Additional design considerations

11.4.1 General considerations

After a pipeline route is selected and surveyed, hydraulic analysis is performed, and other design studies, such as environmental impact assessment, corrosion, material, and coating selections, are completed, the final step in pipeline design is the pipeline mechanical design. The purpose of mechanical design is to ensure that the pipeline has the mechanical strength to withstand its expected load. These normally include the following:

- Functional loads, such as pressure and temperature
- Environmental loads, such as waves, current, wind, and earthquake
- Construction loads, such as laying and testing, which may arise during the installation

Pipeline mechanical design covers differences between pipeline and piping, pipeline codes and standards, major design considerations, pipe properties, and determination of pipeline wall thickness.

11.4.2 Pipeline versus facilities piping

Pipelines and facilities piping have essentially the same purpose, that is, to transport fluid from a source to a delivery point. Beyond this, they exhibit some fundamental differences.

Facilities piping are normally confined to privately owned areas and are usually secured, while pipelines (except for their start and end points) are often built in the public domain. This introduces additional risks due to the potential of third-party activities. It also requires additional planning and negotiations to obtain the necessary permits.

Pipelines are usually buried and are not readily accessible for inspection. On the other hand, facilities piping is normally installed aboveground and thus are much easier to access and inspect.

Pipelines are usually allowed to operate at higher stress levels than facilities piping. The process piping code (ASME B31.3) is much more conservative in allowable stress levels (ASME B31.4/ASME B31.8), primarily because process piping is not buried and is located in a facility (plant), thus creating a greater process hazard potential.

Pipelines do not have a standard pressure rating system. Unlike facilities piping, pipelines do not use standard piping classes (e.g., Classes 150, 300, and 600). Instead, pipelines are designed according to a specific design pressure and design temperature.

There is also a difference in the relationship between the design pressure (DP) and the maximum allowable operating pressure (MAOP). Figure 11.4 illustrates the differences between pipelines and facilities piping. As can be seen from Figure 11.4, piping design codes do not permit any pressure above the DP. In facilities piping, the process trip pressure is usually set at 90% of the DP, and the process alarm and maximum operating pressure are set at 85% of the DP. In pipelines, the MAOP is allowed

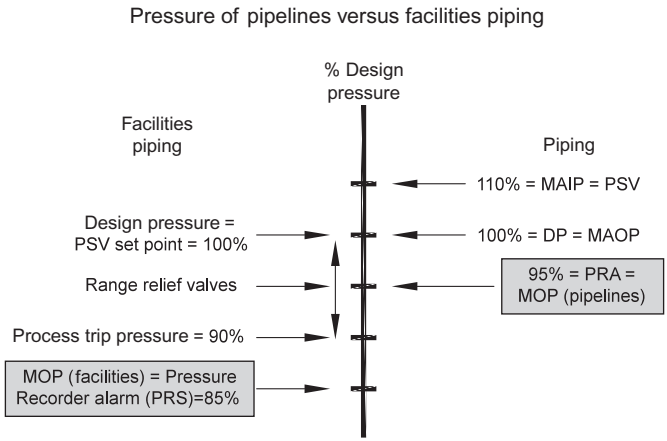

Figure 11.4 Differences between pipeline and facilities piping.

to be set equal to the DP, with incidental pressures allowed up to a maximum of 110% DP.

Pipelines are designed preferably with a constant internal diameter (*ID*) (see Figure 11.5). This is to permit smooth passage of pigs, especially intelligent pigs. This is more critical for gas pipelines than for liquid pipelines. Facilities piping is normally not pigged; therefore, the *ID* is not a concern. For facilities piping, a constant outside diameter (*OD*) is preferable to enable standard design of support/clamps and to maintain pipe racks/tracks at constant elevation.

Pipelines typically operate at about twice the stress level of facilities piping. This permits thinner wall thickness for pipelines than what would be required for facilities piping. This results in considerable savings in line pipe costs. As an example, compare the cost savings in the design of a 24 in. diameter pipe with a DP of 1450 psi (100 bar).

Facilities piping would be required to use ASME B31.3 design code where high-strength steels are not recognized. Therefore, grade B steel is used to determine the wall thickness of 1.25 in. (30.9 mm) with a cost per foot of $155.

Pipelines would be required to use either ASME B31.4 or B31.8, depending if the fluid is a liquid or a gas. Both codes allow the use of higher strength steels. Assuming a

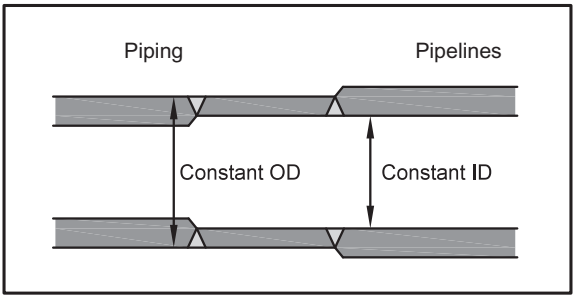

Figure 11.5 Constant ID versus OD.

24″ pipe, 100 bar (#600)

	Piping	Pipeline
Code:	ASME B31.3	ASME B31.4/8
Material:	Grade B	X65
Thickness:	30.9 mm	9.5 mm
Material cost:	$ 343/m	$ 112/m

Figure 11.6 Impact of higher strength steels.

steel grade of X65 is used that gives a wall thickness of 0.375 in. (9.5 mm) with a cost per foot of $52.50. This represents considerable savings. Figure 11.6 summarizes the results and highlights the impact.

11.4.3 Pipeline codes and standards

Pipeline systems are designed according to various statutory and regulatory codes and standards. In addition, most pipeline operators or construction companies have minimum standards that meet or exceed these regulatory requirements.

11.4.3.1 International standards

The international standard for pipeline transportation systems is *ISO 13623*. Other pipeline-related ISO standards have been or are being developed, which cover line pipe, valves, and welding.

11.4.3.2 American standards

In the absence of statutory requirements, or ISO standards, it is common industry practice worldwide to design and operate pipelines in accordance with the following American standard piping codes:

- ASME B31.4 for liquid pipelines
- ASME B31.8 for gas pipelines

11.4.3.3 Other country national standards

Some countries have developed their own national standards. These include the following:

- European Union EN14161
- Dutch standard NEN 3650
- Canadian standard CSA Z662
- British standard PD-8010

These are normally applicable only in these specific countries. Once ISO standards have been issued, one can expect these countries to formally adopt the ISO standard.

11.4.4 Pipeline mechanical design considerations

11.4.4.1 Overview

The mechanical design of pipelines usually requires consideration of several factors. These include the following:

- Internal pressure
- External pressure
- Construction loads
- Stability
- Free spans
- Expansion stresses
- Risers
- External damages

11.4.4.2 Internal pressure

Internal pressure from the contained fluid is the most important loading a pipeline has to carry. If the generated stress in the pipe wall is too large, the pipeline will yield circumferentially, and continued yielding will lead to thinning of the pipe wall and ultimately to rupture. Figure 11.7 shows a picture of pipeline rupture.

11.4.4.3 External pressure

A large external pressure tends to make a pipeline oval and eventually causes it to collapse as shown in Figure 11.8.

This is a major concern for deepwater pipelines, where the external hydrostatic head is an important factor. Onshore buried pipelines may also be affected by the

Figure 11.7 Pipeline rupture.

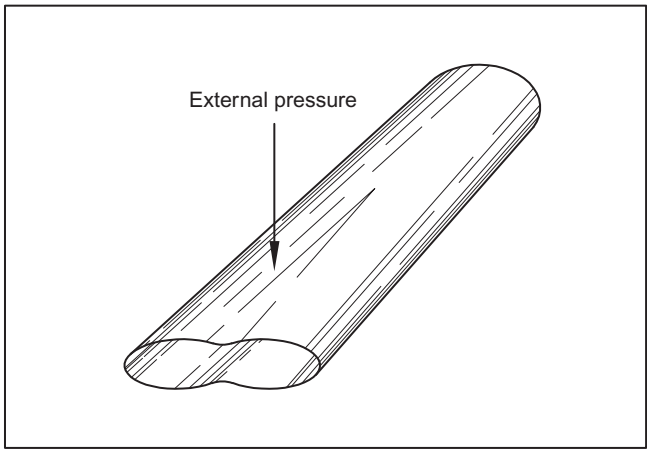

Figure 11.8 Schematic of a pipeline collapse.

overburden weight of vehicles. The use of higher grade steel or thicker wall pipe would protect an offshore pipeline against the external hydrostatic pressure.

11.4.4.4 Construction loads

Pipelines need to withstand the impact of construction loads. Some examples of construction loads are bending during pipe laying and impact loads as the pipeline passes over the stinger of a lay barge due to the barge motion.

11.4.4.5 Stability

A pipeline has to be stable on the seabed. If it is too light, it will slide sideways under the action of currents and waves. Additional weight may be provided by either increasing the wall thickness or adding concrete weight coating. Another way to reduce the environmental loads on the pipe is by lowering it into a trench or by burying it.

11.4.4.6 Free spans

A pipeline laid on an uneven seabed does not usually conform to the seabed profile, but instead forms free spans. These are of concern because of possible fatigue damage induced by vortex oscillations and because the spans are vulnerable to hooking by fishing gears and ship anchors.

11.4.4.7 Expansion stress

Expansion stresses may arise from the difference between the pipeline operating temperature and the installation temperature. If sufficient flexibility is not built in, for example, by providing an expansion loop, buckling may occur.

11.4.4.8 Risers

Risers are vertical sections of pipe, which are used to connect an offshore pipeline on the seabed to the production facilities, normally located on a platform. Riser design must account for variations in temperature, internal pressure, and external environmental loads anticipated throughout the lifetime of the system. A typical riser model is shown in Figure 11.9. Installation loads may vary considerably depending on the method used.

11.4.4.9 External damage

External damage for offshore pipelines mainly results from ship anchors, trawling gears, or other natural hazards. Most offshore pipelines are buried below the ocean floor or covered by gravel/rock to protect them from such external damages.

11.4.4.10 Line pipe

Most line pipe used in pipeline construction is metallic. Nonmetallic pipes are also being used in low-pressure applications. Metallic line pipe is usually manufactured using one of the following methods:

- Seamless method
- Electric resistance welding
- Submerged arc welding

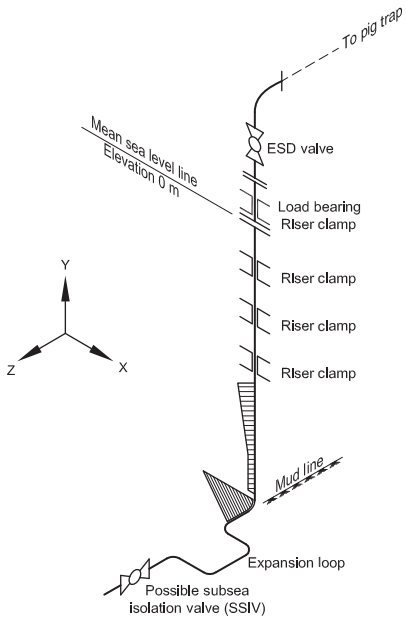

Figure 11.9 Example of a riser model.

There are two types of SAW pipe. They are referred as

- longitudinal submerged arc welding,
- spiral submerged arc welding.

Several grades of pipe are commercially available, offering a range of strengths, such as grades X42 through X46, X52, X60, X65, up to X70. See Table 11.1.

Standard nominal pipe sizes range from 4 in. (100 mm) to 80 in. (2000 mm) in diameter. In the petroleum industry, 60 in. is the largest diameter installed to date. The standard API pipe diameters for both nominal and actual are shown in Table 11.2.

Above 4 in. (100 mm), the standard size step is 2 in. (50 mm). For pipe 14 in. (350 mm) and above, the pipe *OD* equals nominal size. For smaller sizes, the actual *OD* is larger than the nominal size. Pipe manufacturers usually provide a range of diameters, wall thicknesses, and grade combinations. Tables 11.3a and 11.3b are examples, showing pipe specifications for a 16 in. (400 mm) pipe with different wall thicknesses and grades.

Lower grade pipe, up to grade X52, generally obtains adequate strength from normalized carbon steels. For grade X52 and upward, increased strength requires either additions of other strengthening elements, rolling techniques, or quenching and tempering.

11.4.4.11 Pipe/steel properties

The minimum yield strength is the key property of steel used in pipeline design. See Figure 11.10. This figure shows the relationship between stress and strain. The minimum yield strength is defined as the tensile stress required to produce a total elongation of 0.5%.

The most common industry standard for steel line pipe is the API 5L. This standard specification covers both normal (grade B with yield strength of 35,000 psi/240 MPa) and high-strength steels (X42 to X80 with yield strength of 42,000 psi/290 MPa to 80,000 psi/550 MPa). See Table 11.4.

The most common grades used in pipeline design are grades X42 to X65. Lower grades, such as grade B, and higher grades are used in some cases. When using higher grades, problems have been encountered, such as weldability and hydrogen embrittlement caused by cathodic protection.

Table 11.1 Commercially manufactured pipe

Type	Diameter range		Maximum wall thickness		Maximum grade
	D (mm)	(in.)	*D* (mm)	(in.)	
Seamless	2-18		38	1.5	X70
ERW (HFI)	2-24		11	0.438	X65
Longitudinal SAW	16-56		38	1.5	X70
Spiral SAW	450-2000	18-80	25	1.0	X70

Table 11.2 Standard API pipe diameters

Actual outside diameters		Nominal pipe size diameter	
Inches	Millimeters	Nominal pipe size Inches	Diameter normal Meters
2.375	60.3	2	50
2.875	73	2.5	65
3.5	88.9	3	80
4	101.6	3.5	90
4500	114.3	4	100
5.563	141.8	5	125
6.625	168.3	6	150
8.625	219.1	8	200
10.75	273	10	250
12.75	273	12	300
14	355.6	14	350
16	406.4	16	400
18	457	18	450
20	508	20	500
22	559	22	550
24	610	24	600
26	660	26	650
28	711	28	700
30	762	30	750
32	813	32	800
34	864	34	850
36	914	36	900
38	965	38	950
40	1016	40	1000
42	1067	42	1050
44	1118	44	1100
46	1168	46	1150
48	1219	48	1200
50	1270	50	1250
52	1321	52	1300
54	1372	54	1350
56	1422	56	1400
58	1473	58	1450
60	1524	60	1500

11.4.4.12 Maximum allowable operating pressure

The key parameter in pipeline design and operations is the MAOP. This is defined as the maximum pressure under routine operating conditions. Pipeline codes typically permit the MAOP to be set equal to the DP (see Figure 11.11).

Table 11.3a Typical pipeline dimensions

1		2	3	4	5	6	7	8
Size					Test pressure (psi/min)			
					Grade A		Grade B	
Outside diameter in. D	Designation	Weight lb per ft w_{pe}	Wall thickness in. t	Inside diameter in. d	Std.	Alt.	Std.	Alt
16		31.75	0.188	15.624	420	530	490	620
16		34.25	0.203	15.594	460	570	530	670
16		36.91	0.219	15.562	490	620	570	720
16		42.05	0.250	16.500	560	700	660	820
16		47.17	0.281	15.438	630	730	740	920
16		52.27	0.312	15.376	700	880	820	1020
16		57.52	0.344	15.312	770	970	900	1130
16	Std.	62.58	0.375	15.250	840	1050	980	1230
16		67.62	0.406	15.188	910	1110	1070	1330
16		72.80	0.438	15.124	990	1230	1150	1440
16		77.79	0.469	15.062	1060	1320	1230	1540
16	XS	82.77	0.500	15.000	1120	1410	1310	1640
16		92.66	0.562	14.876	1260	1580	1480	1840
16		102.63	0.625	14.750	1410	1760	1640	2050
16		112.51	0.688	14.624	1550	1940	1810	2260
16		122.15	0.750	14.500	1690	2110	1970	2460
16		131.71	0.812	14.376	1830	2280	2130	2660
16		141.34	0.875	14.250	1970	2460	2300	2800
16		150.89	0.938	14.124	2110	2640	2460	2800
16		160.20	1.000	14.000	2250	2800	2620	2800
16		169.43	1.062	13.876	2390	2800	2790	2800
16		178.72	1.125	13.750	2530	2800	2800	2800
16		187.93	1.188	13.624	2670	2800	2800	2800
16		196.91	1.250	13.500	2800	2800	2800	2800

Table 11.3b **Typical pipeline dimensions**

Test pressure (psi/min)							
Grade X42	**Grade X46**	**Grade X52**	**Grade X56**	**Grade X60**	**Grade X65**	**Grade X70**	**Grade X80**
840	920	1040	1120	1200	1300	1400	1600
910	990	1120	1210	1290	1400	1510	1730
980	1070	1210	1300	1400	1510	1630	1860
1120	1220	1380	1490	1590	1730	1860	2130
1250	1370	1550	1670	170	1940	2090	2390
1390	1520	1720	1860	1990	2150	2320	2650
1540	1680	1900	2050	2190	2380	2560	2920
1670	1830	2070	2230	2390	2590	2790	3000
1810	1980	2240	2420	2590	2800	3000	3000
1950	2140	2420	2610	2790	3000	3000	3000
2090	2290	2590	2790	2990	3000	3000	3000
2230	2440	2760	2980	3000	3000	3000	3000
2510	2750	3000	3000	3000	3000	3000	3000
2790	3000	3000	3000	3000	3000	3000	3000
3000	3000	3000	3000	3000	3000	3000	3000
3000	3000	3000	3000	3000	3000	3000	3000
3000	3000	3000	3000	3000	3000	3000	3000
3000	3000	3000	3000	3000	3000	3000	3000
3000	3000	3000	3000	3000	3000	3000	3000
3000	3000	3000	3000	3000	3000	3000	3000
3000	3000	3000	3000	3000	3000	3000	3000
3000	3000	3000	3000	3000	3000	3000	3000
3000	3000	3000	3000	3000	3000	3000	3000
3000	3000	3000	3000	3000	3000	3000	3000

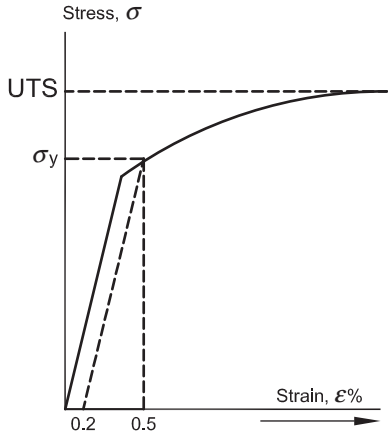

Figure 11.10 Pipeline properties.

Table 11.4 **Pipe yield strength**

Steel grade	Min. yield strength, σ_y (psi)		UTS, σ_T (MPa)
B	35,000	240	413
X42	42,000	290	413
X52	52,000	358	455
X60	60,000	413	517
X65	65,000	448	530
X70	70,000	482	565

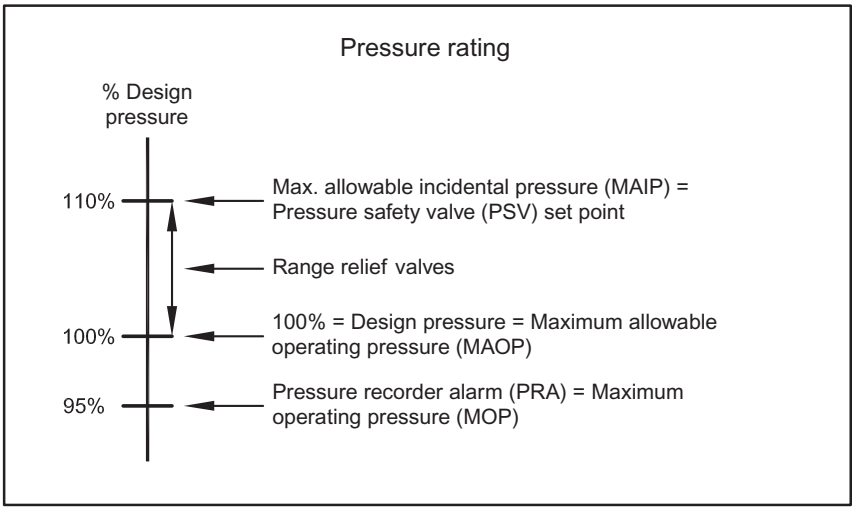

Figure 11.11 Pressure relief rating.

The codes allow a pressure increase above the DP of 10% to accommodate for pressure surges, which are incidental in nature and of short duration. This is known as maximum allowable incidental pressure (MAIP).

The maximum operating pressure (MOP) and pressure recorder alarm (PRA) are usually set at 5% below the MAOP. This is to allow the operator sufficient time to take remedial action before pipeline trips/relief valves start to lift.

11.4.4.13 Determination of wall thickness

The most important element in pipeline mechanical design is the determination of pipeline wall thickness. Wall thickness is a function of the pipeline's MAOP and the yield strength of the steel pipe used. Operating pressure and wall thickness determine the number and locations of pump or compressor stations along the pipeline. If a higher pipeline operating pressure is chosen, the power at each station can be greater, and the stations can be farther apart. This benefit is offset, however, by the additional expense of thicker wall pipe.

The internal pressure of the transport fluid induces a circumferential stress in the pipe wall, which is commonly known as hoop stress (see Figure 11.12).

Hoop stress can be calculated by using a simplified formula, usually known as Barlow's formula, as illustrated in Figure 11.13. Barlow's formula, however, is not the most accurate formula to calculate the pipeline wall stress. It overestimates the maximum hoop stress. But most pipeline codes specify that Barlow's formula be used in pipeline design. Usually, Barlow's formula is rewritten in another form to derive an expression, as shown in Figure 11.14, that is used to calculate the required wall thickness. This formula takes into account an additional parameter, called a design factor, F. The purpose of using a design factor is to keep the circumferential stress of the pipe at a fraction of the yield stress, as a safety precaution. Different values of design factor, F, are used depending on the type of service and pipeline route.

For oil pipelines, a design factor of 0.72 is used for all locations. For gas pipelines, a design factor of 0.72 is used for remote and sparsely populated areas, such as deserts

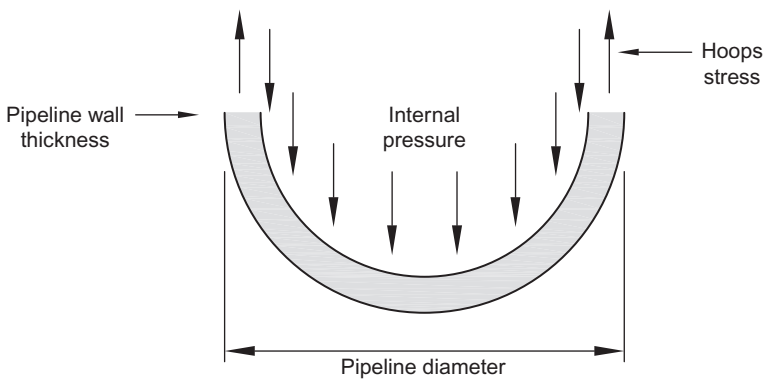

Figure 11.12 Schematic illustrating hoop stress.

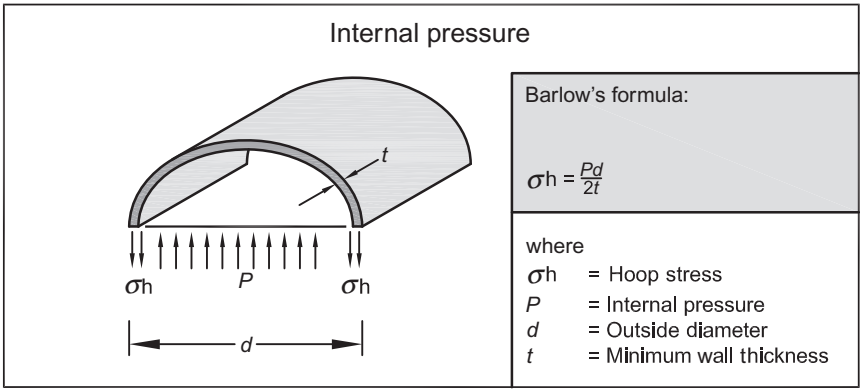

Figure 11.13 Barlow's (hoop stress) formula.

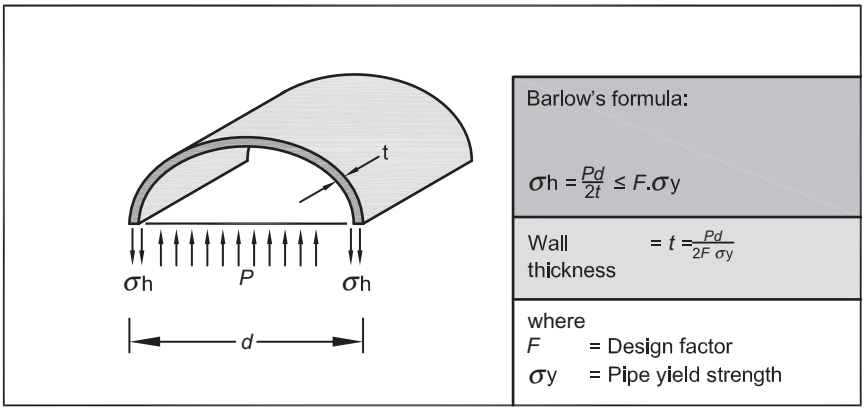

Figure 11.14 Wall thickness calculation.

Table 11.5 **Design factors**

Oil pipelines	$F = 0.72$
Gas pipelines	$F = 0.72/0.6/0.5/0.4$
Offshore risers	Depends on location $F = 0.5$

and tundra. For low populated areas, such as fringe areas of towns and industrial areas, a design factor of 0.60 is used. For well-populated areas, such as residential and industrial areas and shopping centers, a design factor of 0.50 is used. And for areas where there are multistory buildings, or where traffic is heavy, a design factor of 0.40 is used.

For offshore risers, a design factor of 0.50 or 0.60 is used depending on local regulations. Table 11.5 summarizes the various design factors used.

11.5 Pipeline construction phase

Long-haul pipeline system components include meticulously welded sections of high-strength steel and associated aboveground facilities such as compressor stations and measurement and pressure regulation equipment. These pipelines are constructed on what engineers call a moving assembly line. Building a pipeline involves a large specialized workforce; tons of steel pipe; mechanical equipment, such as backhoes and sidebooms; and miles and miles of silt fencing that helps clearly define work boundaries and prevent environmental damage and unnecessary erosion brought on by weather or other events during construction. Every step of the construction process is guided by company and construction engineers, designers, manufacturers, and craft people with years of experience in constructing pipelines. All meet and often exceed the highest governmental and engineering standards for safety, environmental protection, and operational reliability. Great effort is taken to minimize impact to landowners during the construction process. Every step of the project is carefully planned, and multiple construction crews are used along the pipeline route to install the system efficiently and restore the work area as quickly as practical to minimize impact to the public. Depending on the terrain, skilled work crews can install more than a mile of pipeline per day. Once in place, the pipeline system will be well marked with surface-level signage and well maintained utilizing strict federal and engineering standards after being placed in service. Importantly, companies utilize a systematic process to promote pipeline integrity long before the systems are ever constructed and placed underground. Pipeline construction originates with specialized steel that is formed, welded, inspected, and tested to exact international specifications.

The entire pipeline exterior is covered with a specialized epoxy coating, which is a tough corrosion-resistant covering, similar to the coating on kitchen appliances (refer to Figure 11.15). The thickness of the pipe will vary according to factors such as pipeline operating pressure, diameter, population density, and environmental conditions. Most long-haul pipe is between 20 and 42 in. in diameter. The larger the diameter and the higher the operating pressure, the more the pipeline can transport.

Construction methods depend on the terrain, geographic location, and environment. Pipeline construction is classified into two broad categories: onshore pipeline construction and offshore pipeline construction.

11.5.1 Onshore pipelines

Onshore pipeline construction begins with clearing the ROW and ends with hydrostatic testing. These activities and all in between may be carried out by a single contractor or by several subcontractors. This subsection briefly describes these activities that include the following:

- Right-of-way clearing/preparation
- Topsoil stripping
- Trenching and rock blasting
- Pipe stringing and bending

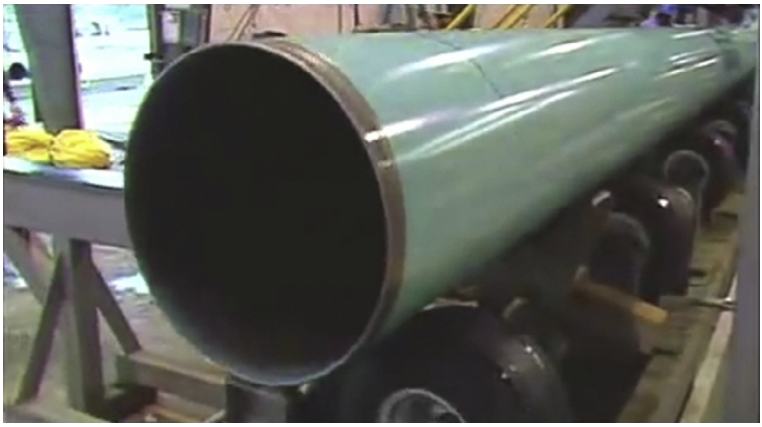

Figure 11.15 Pipeline exterior being coated with a specialized epoxy coating.

- Welding/setup and inspecting
- Pipeline coating
- Lowering in
- Backfilling/cleaning up
- Special construction considerations
- Testing

11.5.1.1 ROW clearing/preparation

The first activity in pipeline construction is the ROW clearing/preparation. An object-free and clearly defined ROW corridor is critically important to pipeline companies in both construction and operational phases. Legal rights to the ROW should be obtained before construction crews can enter the ROW to begin construction activities.

The pipeline route centerline is then staked and the ROW extremities are clearly marked. Figure 11.16 illustrates a typical pipeline route survey map. The ROW agreement allows free and uninterrupted access to the pipeline for regular maintenance, repairs, and periodic inspection during the expected operating life of the pipeline.

A temporary ROW workspace width of about 100 ft. (30 m) is generally required during construction. The width depends on the terrain, pipe diameter, and construction methods used. The permanent ROW for a long-haul pipeline is typically 50 ft. (15 m) wide or roughly 25 ft. (7.5 m) on each side of the pipeline (refer to Figure 11.17). This helps identify the presence of an underground pipeline. Along with aboveground markers, strategically placed over or near the pipeline, there is no better visual reminder of underground utilities in an area than a cleared and well-defined energy corridor (refer to Figure 11.18). This raises public awareness and attention to excavation damage prevention that provides some of the best pipeline protection. The pipeline occupies only a small portion of the ROW. Sufficient space on each side of the ditch is required to allow safe and efficient movement of equipment and construction personnel and excavated soil. Figure 11.19 shows typical ROW cross sections.

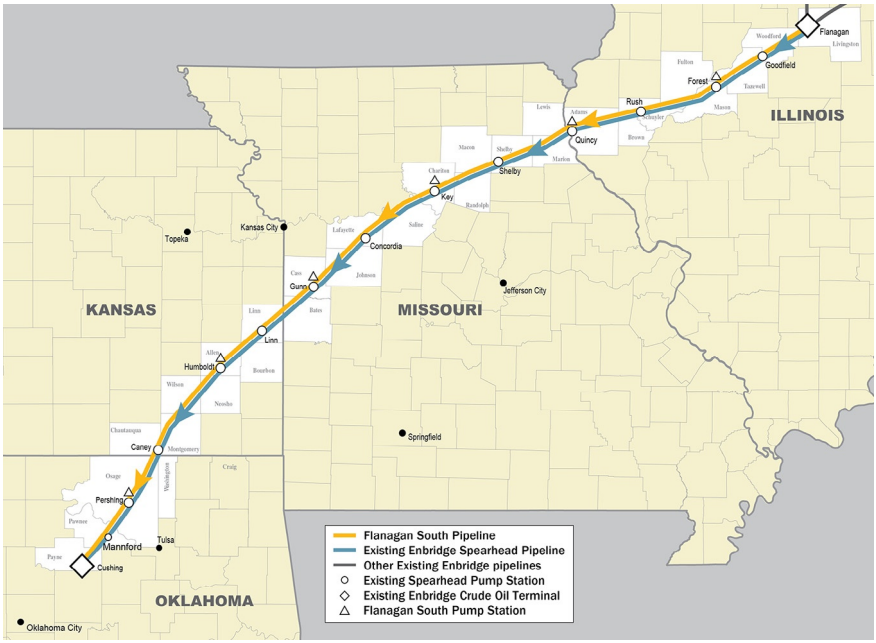

Figure 11.16 Typical route survey map.

Figure 11.17 Permanent ROW for a long-haul pipeline is typically 50 ft. (15 m) wide or roughly 25 ft. (7.5 m) on each side of the pipeline.

On the ROW, work site preparation begins with the removal of all trees and brush from the construction work area. Stumps are removed over the width of the permanent ROW. Specialized heavy equipment is used to assist in this process. The ROW needs to be transformed into a suitable work area by clearing all aboveground vegetation, trees, crops, boulders, and fences. As shown in Figure 11.20, bulldozers are typically

Figure 11.18 Aboveground marker and well-defined energy corridor.

used. The amount of clearing required, if any, depends on the terrain and the method of construction and should provide safe access. Good environmental practices must be followed at all times.

11.5.1.2 Stripping of topsoil

Normally, topsoil is only removed from ROW working strip on agricultural land. It is stored prior to grading or trenching. Grading is conducted, where practical, to provide a relatively level surface to allow safe operation of the heavy equipment required, excavate the trench, and install the pipe into the trench. A motor grader (see Figure 11.21) is used to salvage the topsoil on the first lift and is windowed or piled separately on one side of the ROW with grade soil on the other side, thus avoiding mixing.

11.5.1.3 Trenching and rock blasting

Onshore pipelines are installed either aboveground or buried. If buried, they are installed in a trench. A trench is excavated that is wide enough to safely support the depth of the trench and to allow lowering in of the pipe without damage to the pipeline coating or harm to construction personnel. The trench is excavated along the pipeline centerline using ditching machines, excavators, backhoes, and other excavation equipment. In soft soil, ditching is performed with a "ditching machine" (refer to Figure 11.22). Excavated soil is neatly piled to one side of the ditch to facilitate rapid backfilling after the pipe is laid. In areas where the soil conditions make the trench unstable, the digging of the trench may be delayed until such time the pipe is ready to be lowered so that the time the trench is open is kept to a minimum.

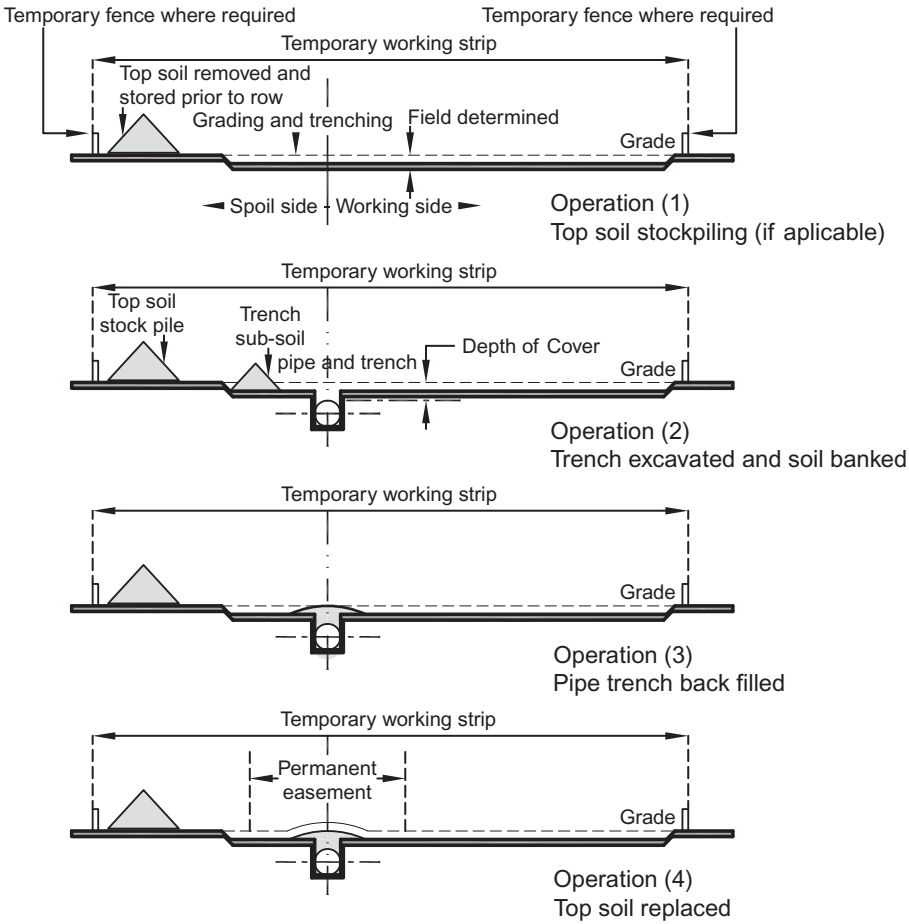

Figure 11.19 Typical ROW cross sections.

Figure 11.20 Bulldozers clearing the ROW.

Figure 11.21 Motor grader stripping topsoil.

If the soil is hard or if it is loose rock, a ditch or trench is made with a backhoe. In some rocky areas, blasting will be required to excavate the trench. As shown in Figure 11.23, ground blasting using explosives is used. If blasting is required, it must be done before stringing the pipe to avoid damaging the coating of the pipe.

The dimensions of the trench depend on the pipe size, nature of the terrain, and applicable regulations. That said, the trench should be wide enough to allow the pipeline to be lowered without the use of external force and to allow the backfill to settle easily around the lower part of the pipe. In addition, the trench should be deep enough to avoid later contact of the pipeline below plow, frost, and utility depths. Figure 11.24 provides typical trench dimensions and Figure 11.25 provides cross sections of typical trench configurations.

Pipelines are normally buried with a minimum of 36 in. (1 m) of cover. In consolidated rock, the minimum cover varies between 18 and 24 in. (45-60 cm). The cover for Class 1 locations is 18 in. (45 cm); the cover for Classes 2 to 4 is 24 in. (60 cm).

11.5.1.4 Stringing and bending

The steel pipe sections, or joints, in 40 or 80 ft. (12-24 m) lengths are trucked to the construction work area and strung out along the route in the areas where they are to be welded together (refer to Figure 11.26). Stringing is the delivery and aligning of the pipe joints along the side of the pipeline trench ready to be welded and tested before being lowered into the trench. Each joint of pipe has a specific place in the pipeline. The stringing crew ensures that each piece of pipe is placed where it belongs (refer to Figure 11.27). Inspectors check the pipe's designated numbers to ensure the joints are in the correct order (refer to Figure 11.28). The crew can unload 8 joints of pipe in under 10 min. The pipeline route is not straight nor is the terrain flat. The pipe must be bent to fit the ROW's topography. As necessary, the pipe joints are bent to follow

Figure 11.22 Ditching machine cutting a trench in soft soil.

the route of the pipeline and contours of the ground. A specialized pipe bending machine is used (refer to Figure 11.29). The amount of the bend in the pipe section is limited to avoid damaging the pipe or coating. Therefore, the pipeline must be bent in the field to fit the three-dimensional profile of the trench. Pipe joints must be bent prior to being welded.

11.5.1.5 Trenching and rock blasting

All pipeline bends should comply with the requirements of ASME B31.4 and ASME B31.8 Codes as illustrated in Figure 11.30. If a small radius bend is required, it must be

Figure 11.23 Rock blasting using explosives.

prefabricated in the fabrication shop. A bending machine is used at the pipeline location to make gradual bends down to 40*D* radius.

11.5.1.6 Welding/setup/inspection

Once the individual pipe joints are strung and bent as required along the pipeline ROW, the pipe is ready to be welded in long continuous sections, which can be up to several thousand feet (meters) depending on terrain. Before the pipe can be welded, the pipe ends must be cleaned thoroughly of all dirt, rust, mill scale, or solvent. The setup crew arranges the pipe for ease of beveling and welding. The pipe ends are beveled in preparation for welding (refer to Figures 11.31–11.34).

Pipeline welding is done either manually or automatically with electric welding equipment. Normally, onshore pipelines are usually manually welded but automatic welding is increasingly being used.

The pipe strung along the ROW is welded in a progressive manner. The welding is highly controlled and performed by welders using proved international standards. The "main gang" welds the pipe (refer to Figure 11.35). The pipe is first is preheated to over 212 °F (100 °C), which evaporates all moisture from the surface (refer to Figure 11.36). Welding is normally done in several passes. The thickness of the pipe dictates the number of passes. Normally, a minimum of three welding passes are required. Internal welding machines are used to align and prep the pipe for each weld (refer to Figure 11.37). As the internal welding machine makes its weld, weld shacks, usually employed in harsh environments, are lowered onto the pipe to deposit their welds. Each weld shack makes a specific weld pass (refer to Figure 11.38). Sidebooms work along the ROW lifting the pipe, while the crew aligns the pipe in preparation for the "stringer bead" weld. After the welding ends have been properly aligned and held with line-up clamps, the lead welder or welders make the first pass or "stringer weld."

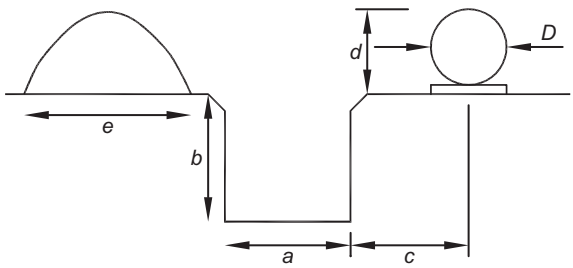

Nominal pipe diameter mm	-D_n (in)	a m	b m	c m	d m	e m
250	(10)	0.50	1.30	1.30	0.75	2.40
300	(12)	0.70	1.30	1.30	0.80	4.55
400	(16)	0.80	1.40	1.40	0.90	2.90
450	(18)	0.90	1.45	1.45	1.45	3.00
500	(20)	0.00	1.50	1.50	1.00	3.15
600	(24)	1.00	1.60	1.60	1.10	3.00
750	(30)	1.15	1.75	1.75	1.25	3.85
800	(32)	1.20	1.80	1.80	1.30	4.00
900	(36)	1.35	1.90	1.90	1.40	4.35
1000	(40)	1.45	2.00	2.00	1.50	4.60
1200	(48)	1.80	2.20	2.20	1.70	5.40
1400	(56)	2.00	2.40	2.40	1.90	5.90
1500	(60)	2.15	2.50	2.50	2.00	6.20

Notes:
1. Trench profile will depend on ground conditions. Dimension "*a*" is at trench Bottom
2. Dimensions, "*b*," is based on nominal 1 m depth of cover; this can vary depending on bed requirements, ground conditions, etc. No allowance has been made for sand pad requirements (see 2.1.3.9)
3. Width of stockpile, "*e*," is based on 3/4 gradient

Figure 11.24 Typical trench dimensions.

A group of welders follow behind the stringer welder(s) and apply the "hot pass" bead or seal weld (refer to Figure 11.39). Additional welders will follow to apply the final passes of weld material until the required number of passes has been deposited per the specifications (refer to Figures 11.40–11.42). Welders must be certified for the pipe sizes to be welded.

Each weld made on the pipeline is visually inspected, and the welding process is verified by either radiographic or ultrasonic technologies. Welds that do not pass stringent requirements are repaired or replaced. Inspecting welded joints is a critical part of the mechanical integrity of the pipeline system. After a weld is completed, it must be

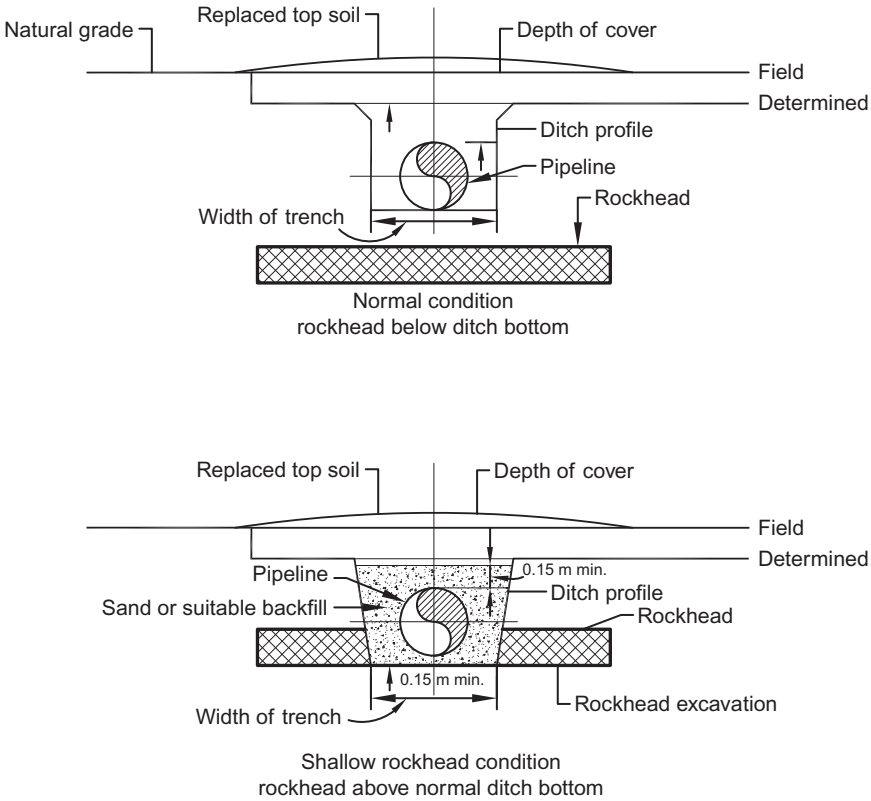

Figure 11.25 Cross sections of typical trench configurations.

Figure 11.26 Pipe stringing.

Figure 11.27 Each joint of pipe has a specific place in the pipeline.

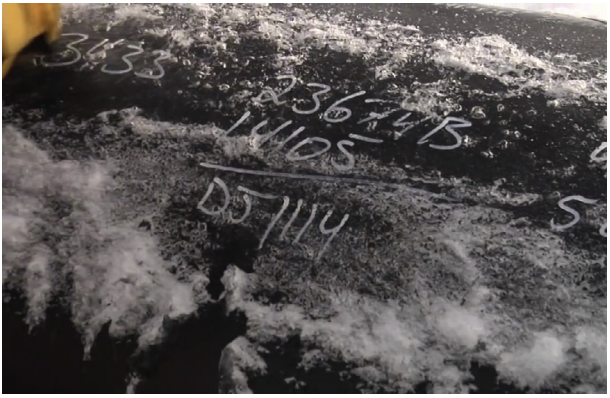

Figure 11.28 Inspectors check the pipe's designated numbers to ensure the joints are in the correct order.

Figure 11.29 Bending machine is used to bend pipe joints to fit the contour of the ground.

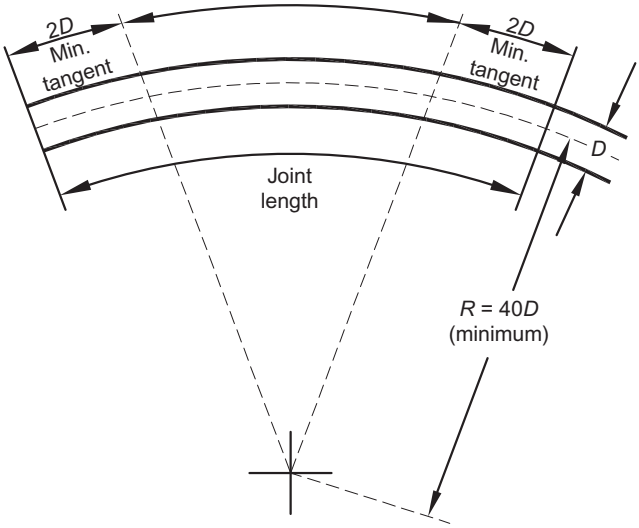

Notes:
1. Bend radius (R) depends on method of bending and pipe D/t
2. Bends should be of uniform radius with curvature evenly distributed over the length of the pipe joint
3. Bends should be free from buckles, wrinkles, cracks, or other mechanical defects
4. Ovality after bending should not exceed 2.5%
5. Longitudinal welds shall be near the neutral axis of the bend
6. No bend should be made within $2D$ of a previously made girth weld.

Figure 11.30 Bending requirements per ASME B31.4 and ASME B31.8 Codes.

Figure 11.31 Setup crew arranges the pipe for ease of beveling and welding.

Figure 11.32 Pipe setup ready for welding.

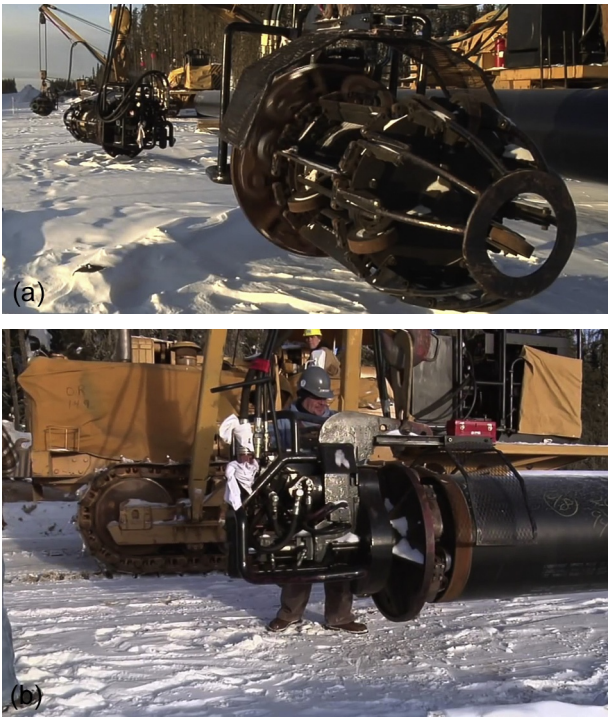

Figure 11.33 Pipe facing machine is inserted into the end of the pipe.

Figure 11.34 Pipe facing machine takes less than 10 s to bevel the pipe end.

examined to ensure its integrity. A number of nondestructive examination techniques are used, such as radiograph "X-ray," gamma ray, and ultrasonic (refer to Figure 11.43). The X-ray inspection method is the most used technique. In this technique, a photographic film is wrapped around the circumference of the pipe over the weld and exposed to radiation (see Figure 11.44). Any cracks, porosity, or other welding defects are visible after the film is developed. X-ray films are interpreted

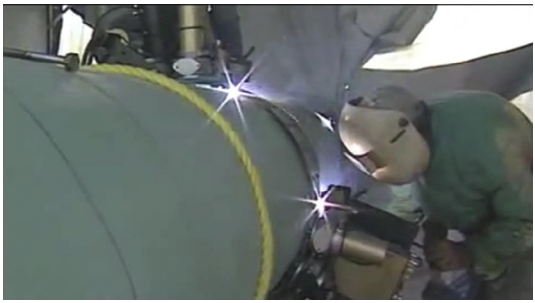

Figure 11.35 Welder making the initial weld.

Figure 11.36 Pipe being preheated to over 212 °F (100 °C), which evaporates all moisture from the surface.

Figure 11.37 Internal welding machine making initial weld.

Figure 11.38 Weld shacks are used in harsh environments.

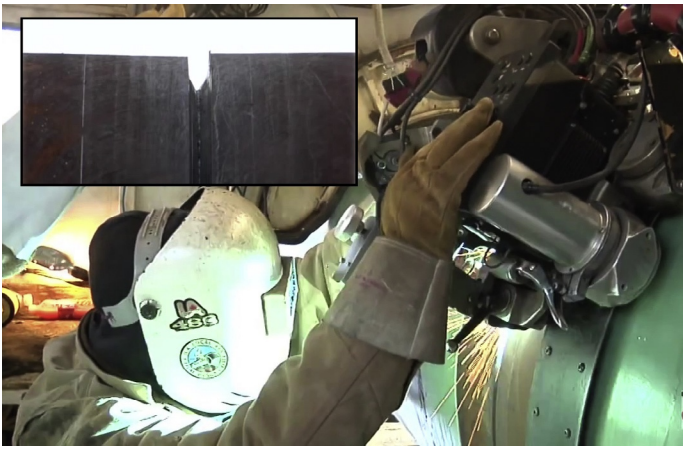

Figure 11.39 Hot pass weld.

carefully, and if any defective weld is found, it is either repaired or removed, and a new weld is made and inspected before the welded joint is wrapped (refer to Figure 11.45). The construction plan must specify what percentage of the welds are to be radiographed and examined. Hundred percent radiograph inspection is required for all joints located in critical service such as sour service.

11.5.1.7 Pipeline coating

A specialized corrosion protection coating is applied to each of the welded joint areas after the inspection is complete (refer to Figure 11.46). The coating on the entire pipe

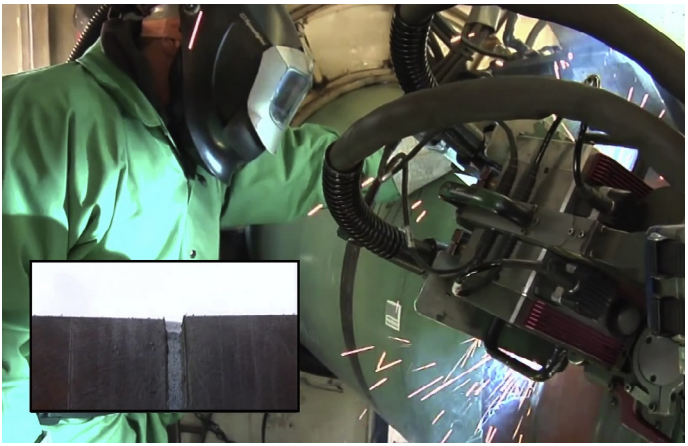

Figure 11.40 First fill weld.

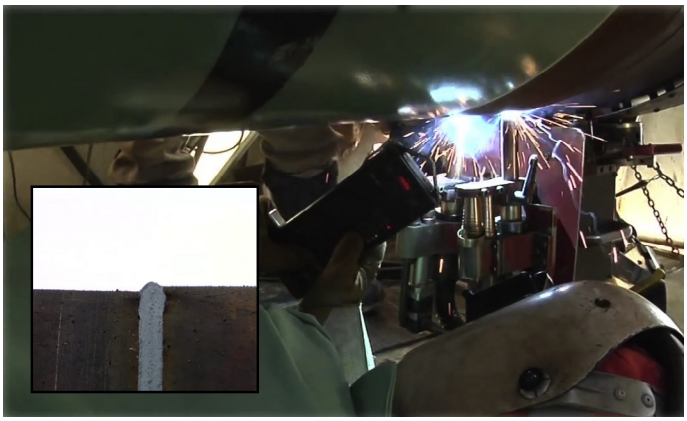

Figure 11.41 Last fill weld.

Figure 11.42 Finished weld.

Figure 11.43 Ultrasonic testing.

Figure 11.44 Radiograph "X-ray" inspection.

Figure 11.45 Radiograph "X-ray" interpretation.

Figure 11.46 Coating on uncoated pipeline joint.

section is then electronically checked for any coating problems and repaired prior to lowering the pipe in the trench. The major objectives of applying a coating to a pipeline are to protect the pipe from corrosion and prevent water from coming in contact with the steel pipe. Pipelines are typically coated at a coating mill prior to delivery to the construction site. Alternatively, the coating may be applied at the construction storage site. In either case, only the uncoated portion of the welded pipeline joints needs to be coated. Coating of the welded joints should be done with care, and sufficient overlap should be provided to ensure that the whole length of the pipeline is correctly protected (refer to Figure 11.47). The oxidized pipe joint is sandblasted to remove all contaminates. In cold environments, inductance coils preheat the weld prior to coating (refer to Figure 11.48). The correct temperature is maintained until the

Figure 11.47 Coating of weld joints with sufficient overlap.

Figure 11.48 Inductance coils are used in cold environments to preheat the weld prior to coating.

coating shack, used in harsh environments, is ready to move. The coating shack contains the coating head. The coating shack is lowered onto the weld. The coating head applies an epoxy/coating mixture to the weld. The coating head finishes the job in less than a minute with no waste and no further steps required (refer to Figure 11.49).

There are a number of coating materials used for external protection of oil and gas pipelines. The selection of the material depends upon the terrain, soil condition, backfill material, and expected operating temperature. The most commonly used coating materials for oil and gas pipelines include the following:

- Hot applied asphalt
- Polyethylene (PE) coatings
- FBE coating

Figure 11.49 Coating shack, which contains the coating head, is used in cold environments.

- Asphalt mastic epoxy coating
- Cold-applied epoxy tar coatings

When coatings are applied in a coating mill or coating yard, the following systems are used for the welded joints:

- Polyethylene shrink sleeves
- Epoxy field joint coating (used for FBE-coated pipe)
- Fused polyethylene powder (used for PE-coated pipe)
- Coal applied tapes

11.5.1.8 Lowering in

Upon completion of the welding, welded joint radiograph inspection, application, and inspection of coatings, the pipeline is now ready to be placed in the trench. As shown in Figure 11.50, the pipeline is lifted and carefully lowered to the bottom of the trench by special pipe-laying tractors called "sidebooms." It is imperative the pipeline is inspected prior to placement to ensure that there are no tears or bruises on the external coating. In rocky areas, it may be necessary to either put a pad of fine soil on the trench bottom or install sandbag benches to prevent damage to the coating (refer to Figure 11.51). Wide nonabrasive belts or rubber tired roller cradles are sometimes used to avoid damaging the protective coating and overstressing the pipeline. The coating is rechecked again. The ends of these completed pipe segments are then welded together in the trench to form a continuous pipeline.

In below-sea-level areas or where groundwater is present, anchors or concrete weights are placed on the pipe to keep it from floating. After the pipeline is lowered into the trench, tie-in welds are made between the lowered sections (see Figure 11.52). Pipe ends are properly aligned without the use of external force. This is required to prevent the tie-in joints from being left under stress.

Figure 11.50 Lowering in the pipeline into the bottom of the trench.

Figure 11.51 Pipeline installed on sandbag trenches to prevent damage to the coating.

Figure 11.52 Tie-in welds being made between lowered sections.

11.5.1.9 Backfilling/testing/cleanup

Once long sections of pipe are completely in the trench, the material excavated from the trench is carefully replaced over the pipeline. A layer of rock-free pad dirt is placed all around the pipe to protect the coating (refer to Figure 11.53). Care should be exercised to ensure that the pipe is not crushed by the weight of the backfill or by rocks falling on the pipe. When the excavated material is unsuitable for backfilling, sand or equivalent material should be used.

As various sections are completed and the trenches are backfilled (Figures 11.54 and 11.55), the pipes are filled with water and safely pressurized to a point significantly higher than the maximum pressure the pipe will ever be operated to verify the overall integrity of the pipeline. This test pressure is held for a minimum of several hours to test the structural integrity and overall strength of the pipeline and to allow minute water leaks to be found (refer to Figure 11.56).

Figure 11.53 Rock-free pad dirt is placed all around the pipe to protect the coating.

Figure 11.54 Backfilling the trench.

Figure 11.55 Bulldozers grooming the ROW.

Figure 11.56 Hydrostatic pressure testing a pipeline.

The cleanup and restoration process starts as soon as practical after the pipe trench is backfilled and continues until the construction work area is restored and revegetated. All terrain is replaced to original contours as much as possible. The work area is restored utilizing seeding and soil preparation specific to the affected area to restore ground cover and to minimize erosion. Temporary workspaces will be allowed to return to their previous state either wooded or open. The permanent ROW corridor will need to remain free from most obstructions to signal to any passersby that underground utilities are present (refer to Figure 11.57). Aboveground markers will be placed at locations such as road crossings and at various strategic places along the route to further indicate the presence of a pipeline. The markers contain important information such as operating company contact phone numbers and the commodity being transported (refer to Figure 11.58). Upon completion of construction, the ROW typically may be used for most residential, commercial, or agricultural purposes provided this use does not interfere with the safe operation, maintenance, inspection, and repair of the pipeline or obstruct access to or along the ROW. Restrictions are

Figure 11.57 ROW restored to original condition.

Figure 11.58 Aboveground marker.

documented in the easement agreements, but, in general, permanent structures should not be placed on the ROW. Some examples of these types of obstructions include houses, decks, sheds, pools, and septic tanks. Also, tall vegetation or trees should not be placed on or near the ROW. Some items, such as driveways, fences, and improved parking lots, may be placed over ROWs if they meet certain requirements to protect the pipeline. One should always check with the pipeline operator and easement restrictions prior to beginning any work. As shown in Figure 11.59, the ROW should be restored as nearly as possible to its original condition.

11.5.1.10 Special construction considerations

There are often times pipeline ROWs will need to cross highways, roads, and rivers. These crossings require special construction considerations and require special construction equipment and procedures. Depending on the width of the road or the size of the river to be crossed, a variety of construction techniques are available. Typically, these crossings

Figure 11.59 ROW restored as nearly as possible to its original condition.

are installed using either a wet bore or dry bore method. The boring is done by rigs that are similar to very small drilling rigs, laid horizontally and placed in pre-excavated boring-level pits (see Figure 11.60). The boring rig drills underneath the crossing area, and the pipe or casing is installed. The wet bore method uses a boring rig and circulates water or drilling fluid through a drill stem to open a small pilot hole and then pulls a pipe or casing-sized cutting head back to the rig, cutting a hole large enough to place the pipe or casing.

The dry bore method is similar, but the casing or carrier pipe is fitted with a cutting head and is used to drill the hole and is left in place when the drill is completed. The hole is drilled dry and does not use any water or fluid to assist the drilling operation. Railroad crossings are never open cut and are always bored.

11.5.2 Offshore pipelines

Many of the construction activities of offshore pipelines are similar to those used onshore; that said, other than specific design and construction considerations used for offshore pipelines, there are other unique and highly specialized methods used offshore, specifically in pipe laying, tie-in/riser installation, and submarine protection.

Figure 11.60 Boring machine used to make a crossing under a road.

11.5.2.1 Design considerations

Offshore pipelines are subjected to high bending stresses and high crushing forces especially as they are being constructed in deeper and deeper waters. Pipelines up to 28 in. in diameter are now installed in offshore water depths over 10,000 ft. The materials used are essentially the same as those used in onshore pipelines. When a pipeline is designed in accordance with ASME B31.4/B31.8 Code, a design factor of 0.72 is used for most of the pipeline wall thickness calculation and a 0.5 design factor if used in the pipe and often the first 300 ft. of pipe adjacent to the riser. Nominal pipe diameters greater than 10 in. installed in low-density saltwater can be expected to float. This situation can be overcome by either increasing the wall thickness of the pipe, thus increasing the weight of the pipe, adding a concrete weight coating, or laying the line wet to get the required on-bottom stability. Pipe is normally designed to have a specific gravity of 1.35.

Offshore pipelines must be designed with sufficient wall thickness to handle the following:

- Maximum internal operating pressure
- Maximum bending stresses
- Maximum external crushing forces

High-strength, high-grade pipes, such as API 5L X65 and greater, are often used for construction, structural, and economical considerations. The minimum bending radius calculation for concrete-coated pipe is expressed as

$$R = EC/S_B \tag{11.1}$$

where

R = bending radius (in.),
E = modulus of elasticity for concrete,
= 3,000,000 psi,
C = pipe radius + enamel + concrete thickness (in.),
S_B = 2500 psi.

The minimum bending radius for steel is expressed as

$$R = EC/(f)(S_y) - PD/4t \tag{11.2}$$

where

S_y = pipe specified minimum yield strength (psi),
P = design pressure (psi),
D = pipe OD (in.),
t = pipe wall thickness (in.),
R = bending radius (in.),
E = modulus of elasticity for steel,
= 30,000,000 psi,
C = pipe radius (in.),
f = stress factor,
= 75-85% for offshore design.

Example 11.1 *Determination of minimum bending radius*

Given:

Pipe size: 16 in.
Coating: ½ in. somastic
Concrete: 1 in.

Determine:

Minimum bending radius

Solution:

$$R = EC/S_B$$
$$= [(3,,,000,,,000)(8+0.5+1)]/2500$$
$$= 11{,}400 \text{ in.}$$
$$= 950 \text{ ft.}$$

Computer programs are used to calculate the tension required on the pipe to maintain an acceptable bending radius. These are complex calculations and should be performed by experts.

11.5.2.2 Construction considerations

The methods used for laying offshore pipelines are lay barges, reeling, and towing.

11.5.2.2.1 Lay barges

Each construction activity, with the exception of pipe burial, takes place on the lay barge. The pipe is lowered from the rear of the barge using a sophisticated system of dynamic positioners, rollers, cable tensioners, floats, and adjustable booms or stinger. Figure 11.61 shows the basic components of a typical pipe-laying system on a lay barge. A lay barge is basically a floating work platform where all pipeline construction activities, similar to those conducted onshore, are performed. A lay barge is equipped with several welding stations, a welding inspection station, and one or

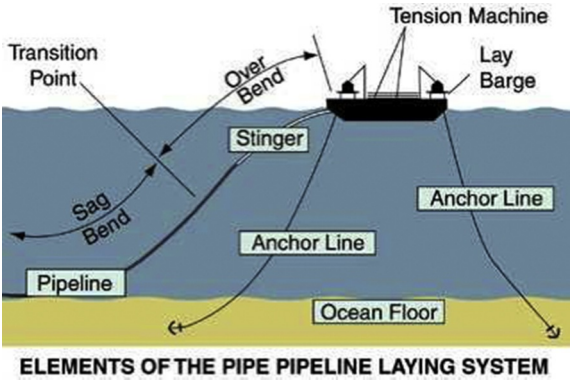

Figure 11.61 Basic components of a pipe-laying system on a lay barge.

more coating stations. Single or double joints are welded, inspected, and coated. The completed pipeline exits the rear of the barge, where it is "laid" onto the seafloor.

The two major components of a lay barge are the tensioner and the stinger. The tensioner is a device that maintains tension on the pipe as it goes into the water so as to reduce bending stresses. The stringer is an extension of the production ramp that supports and guides the completed pipeline behind the lay barge as the pipeline is lowered into the water. The stringer allows adjustment of the pipe launch angle according to the water depth. Stringers may be straight, curved, or articulated depending on pipe size, weight, and water depth. The pipe is strung out behind and below the lay barge and assumes an S-shape or J-shape. Lay barge construction can be used to lay pipelines up to 48 in. in diameter in water depths up to approximately 1800 ft. (600 m).

Figure 11.62 shows the Acergy "Piper," a third-generation lay barge that has been most successful in laying several major deepwater pipelines across the Norwegian trench. Figure 11.63 shows a schematic of a typical S-lay configuration. In the S-lay, the pipe is made up horizontally on the barge allowing for several welding stations. The pipe leaves the barge over a stringer that controls the curvature of the "overbend." Tension in the barge anchors controls the radius of curvature of the "sag bend," which returns the pipe to horizontal on the seafloor. Figure 11.64 shows the Acergy Piper's stinger that controls the geometric curvature of the pipeline, depending upon the

Figure 11.62 Acergy Piper 3rd-generation lay barge configuration.

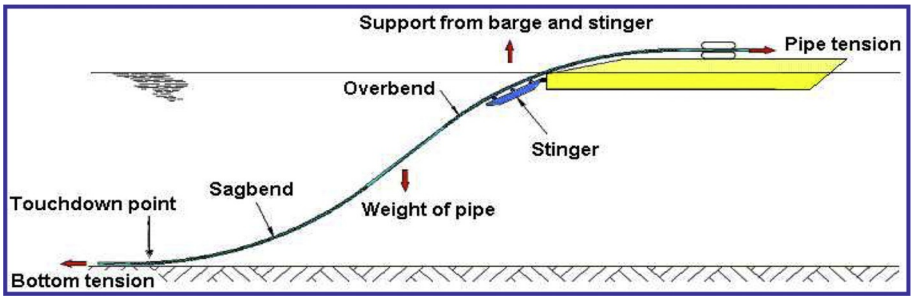

Figure 11.63 Schematic showing basic components of an S-lay barge.

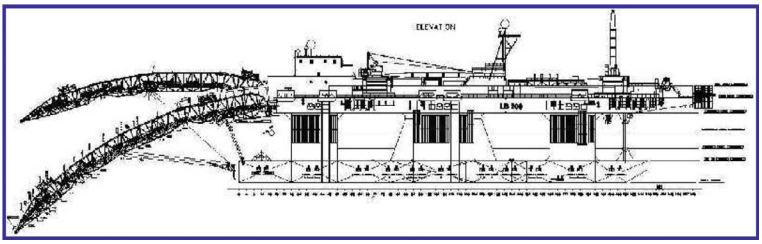

Figure 11.64 Acergy Piper S-lay barge showing stinger.

submerged weight of the suspended pipeline and the water depth. These parameters determine the tension capacity required to hold the pipeline in place while it is being welded together. Figures 11.65 and 11.66 show a conventional S-lay and steep-lay used for deeper waters.

In very deep waters, it is not possible to control the overbend with a stinger, so a J-lay unit must be used where the pipe leaves the barge vertically. AJ-lay requires a tower on the barge to hold a length of pipe while all the welding is done at one location. Figure 11.67 shows the Acergy Polaris' J-lay tower. The schematic illustrates the advantage of the J-lay over the S-lay, as the pipeline is suspended in the vertical plane until it is near the seabed. Thus, the stresses in the sag bend are minimized in comparison with the high bending stresses that develop in the unsupported S-lay overbend and sag bend. J-lay pipe-laying capacity is primarily limited by the submerged weight of the suspended pipeline, rather than critical bending stresses. There are numerous J-lay barges now in operation, mostly using double-joint towers. Figure 11.68 shows the Saipem 7000 crane lift barge, which uses a quad-joint fabrication system, thus increasing overall productivity.

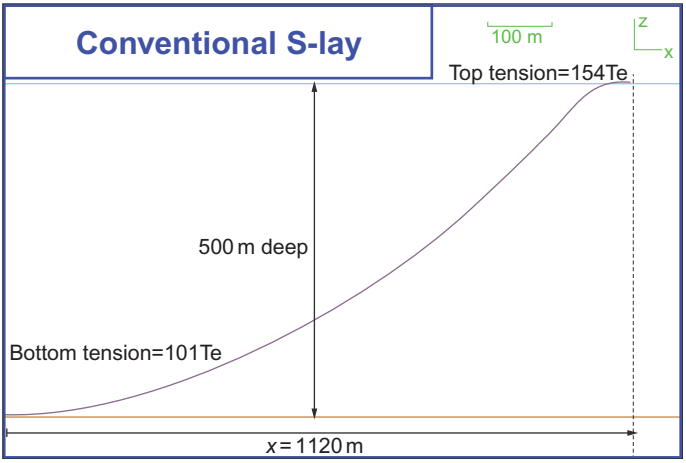

Figure 11.65 Schematic showing a conventional S-lay barge configuration.

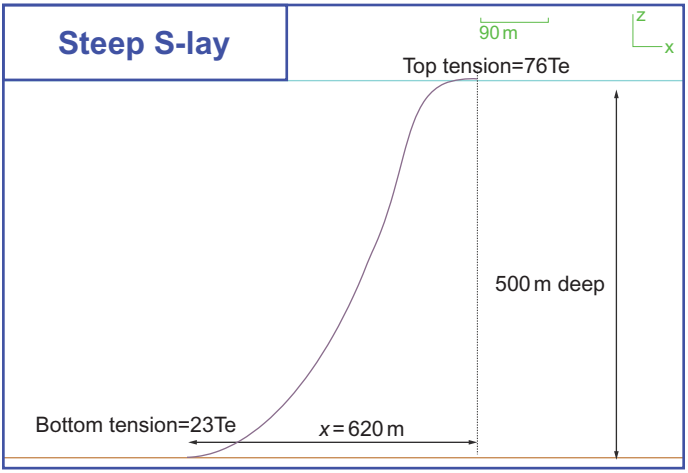

Figure 11.66 Schematic showing a steep S-lay barge configuration.

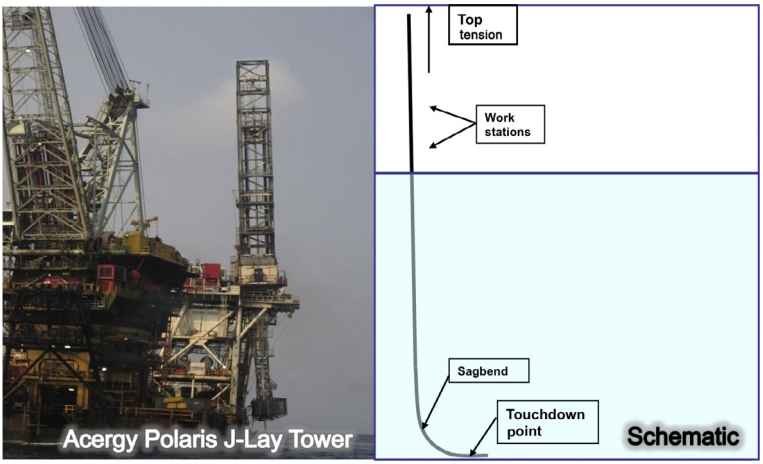

Figure 11.67 Acergy Polaris J-lay tower.

11.5.2.2.2 Reel barges

Reel barge construction relies upon the use of a large-diameter reel wound with prewelded pipe (Figure 11.69). Welding, coating, and testing are carried out onshore at a central assembly area, and then, the completed pipe is coiled onto the large reel. A barge, outfitted with the full reel, moves to the construction site. At the site, one end of the pipeline is anchored or connected to the recently laid pipe, and the barge is moved along the pipeline route. Straightening rollers are used, as the pipe is unreeled into the water. A reel can install a pipeline much faster than a lay barge, but it is

Figure 11.68 Saipem 7000 crane lift barge with quad-joint fabrication system, which increases overall productivity.

Figure 11.69 Reel barge showing straightening rollers unreeling pipe into the water.

limited to pipeline diameters of up to 16 in. (400 mm). The maximum length that can be installed in one continuous section depends on the pipe size, reel capacity, and barge capabilities, but up to 12 miles (22 km) of 10 in. (250 mm) pipe is possible.

Reeling is a very efficient installation method for smaller diameter pipelines, especially for shorter pipelines and interfield flow lines. The time required to spool a full reel at the shore base, sail to the field, install the pipeline, and then return to base for another full reel can be relatively short in comparison with conventional S-lay or J-lay.

Reeled pipelines cannot have any concrete weight coating; one needs to be aware the line pipe may have a heavier wall thickness than that required for pressure to ensure the pipeline has sufficient negative buoyancy to meet its on-bottom stability.

Figure 11.70 is a view of the Apache reel ship showing how the spooled pipeline passes through the straightening tensioner as it is unreeled offshore. Reeling induces plastic deformation in the pipeline beyond the normal elastic modules of the steel. Hence, the pipeline is permanently deformed once it has been laid on the seabed. Reeling is possible because

- line pipe and pipeline welds are ductile,
- line pipe steel strain hardens,
- its displacement is controlled by the configuration of the pipe-straightening tensioner.

11.5.2.2.3 Towing

Towing does not require a barge. Long sections of pipe are welded, inspected, and coated onshore and then pulled into water by a tow vessel or winches. Besides being less expensive, this method of construction is particularly attractive for such applications as

- shore approaches,
- short pipelines,
- bundles of several pipelines,
- deep water, and
- areas having a short installation season.

Figure 11.70 Apache reel ship illustrating a spooled pipeline barge. Spooled pipeline passes through the straightening tensioner.

Three towed pipeline installation methods are the following:

- Surface tow
- Mid-depth tow (controlled depth tow)
- Bottom tow

Towed pipeline systems are particularly applicable to infield flow lines, and satellite tieback wells have been used extensively in the North Sea and, more recently, for deepwater developments in West Africa.

Figure 11.71 shows photos of the fabrication yard, riser bundle, and surface tow for BP's Plutonio deepwater development in Angola. The upper view of Figure 11.72 shows the launch of the completed flow line bundle protected by the external "structural" carrier pipe that provides buoyancy during the mid-depth tow. In the lower view, two tug boats control the configuration of the bundle pipeline in a horizontal plane during the tow. Once in place on the seabed, the carrier pipe is flooded providing on-bottom stability and mechanical protection. Figure 11.73 shows the launching channel, bottom tow route, and towed bundle of a deepwater project in Angola. The limitations of a towed bundle are its submerged weight, seabed friction, tug bollard pull, bundle stability, obstructions, and curvatures of the tow route. The establishment of a satisfactory bottom tow route is a major consideration in planning this exercise, to ensure that the bundles can be safely towed without experiencing any damage to their external protective carrier pipes or internal flow lines.

11.5.2.3 Tie-in/riser installation

After the pipeline has been laid, a vertical section of pipe, called a riser, is used to connect the pipeline on the seabed to the production facilities, which is normally located on a production platform. Figure 11.74 shows the elements of a typical riser installation. A tie-in between the underwater pipeline and the riser can be made by

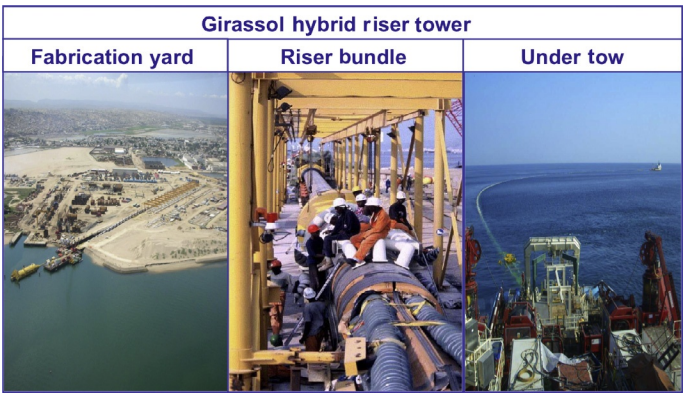

Figure 11.71 Fabrication yard, riser bundle, and surface bundle of BP's Plutonio deepwater development in Angola.

Figure 11.72 Fabrication yard, riser bundle, and surface tow of BP's Plutonio deepwater development in Angola.

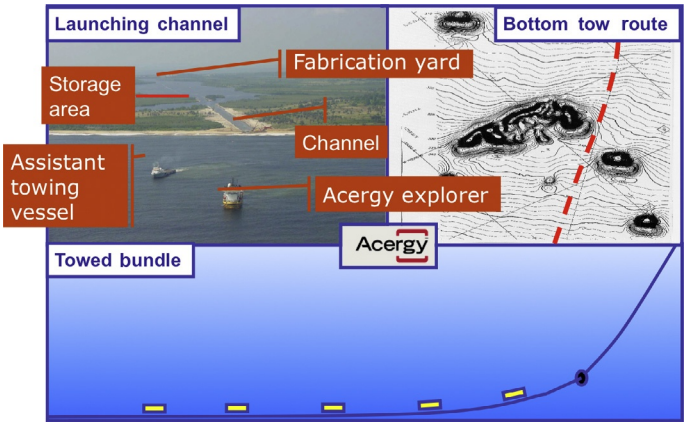

Figure 11.73 Launching channel, towed bundle, and bottom tow route of a deepwater project in Angola.

- welding,
- flanging,
- mechanical connectors.

Welding, whenever practical, is the method of choice. Both conventional surface welding and subsurface welding are used. Surface welding is normally limited to shallow water and to smaller pipe diameters. For deep waters and larger diameter pipelines, subsurface welding is performed. This method requires extensive diving and special welding procedures.

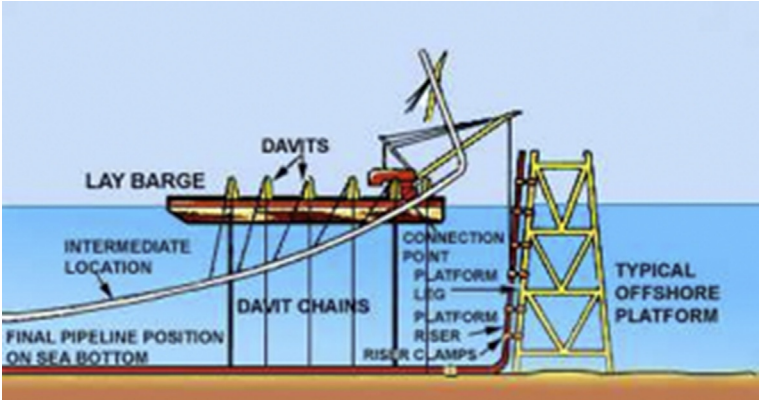

Figure 11.74 Elements of a typical riser installation.

A flanged tie-in is performed by divers on the seabed by installing a flanged makeup spool between the flanged ends of the two lines to be connected. Figure 11.75 shows a cutaway of a typical mechanical tie-in connector that is activated from the surface by hydraulics. The main advantage of mechanical connectors is that they do not need diver intervention. Since their reliability is not yet fully established, mechanical connectors are mainly used for emergency repairs.

When the riser is an integral part of the pipeline, other riser methods can be used. In these cases, the pipeline is pulled up to the platform deck. These techniques include the following:

- Pull-tube method (Figure 11.76)
- Bending shoe method (Figure 11.77)
- Barefoot riser method (Figure 11.78)

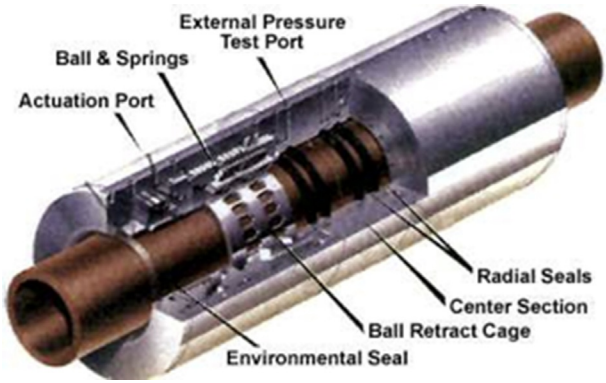

Figure 11.75 Mechanical coupling device.

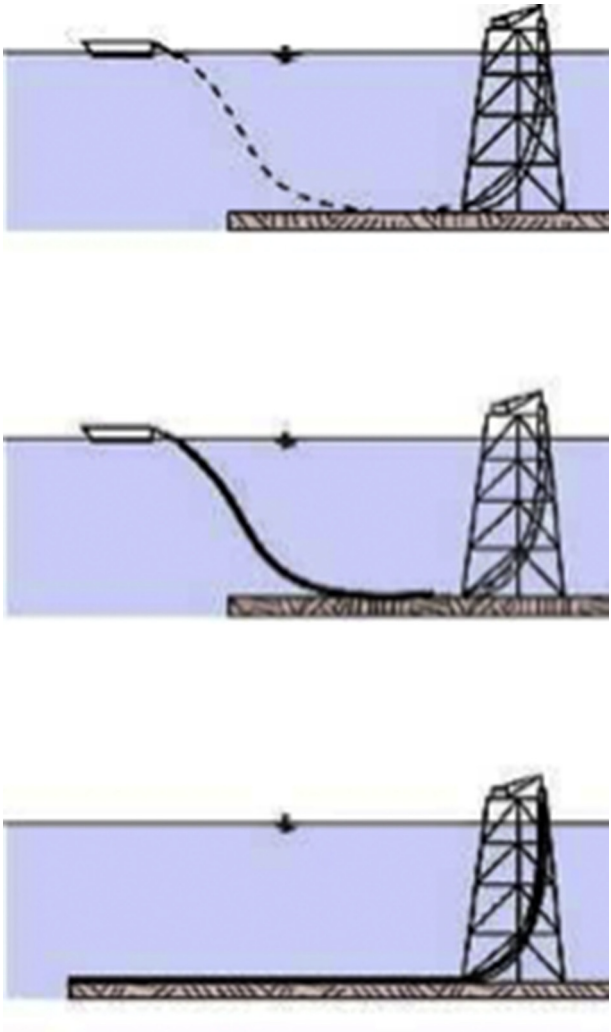

Figure 11.76 Pull-tube method riser installation.

Figure 11.79 shows one of the steel catenary risers (SCRs) attached to ExxonMobil's deepwater Hoover SPAR platform in the Gulf of Mexico. The SCR was fabricated and installed offshore by Saipem 7000 as an extension of the J-lay pipeline and then transferred to the platform using the barge crane. The drawing also shows the riser hang-off anchor support attached to the SPAR. SCRs have been installed on ship-shaped FPSO vessels such as Shell's Bonga and ExxonMobil's Erha deepwater fields in Nigeria.

Figure 11.80 is a schematic that shows two flexible risers installed in the lazy-S configuration, which uses a buoyant mid-arch for their support. The insert illustrates

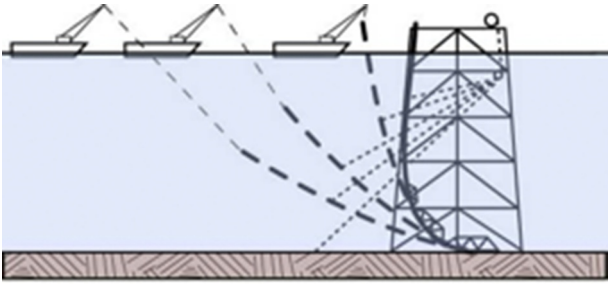

Figure 11.77 Bending shoe method riser installation.

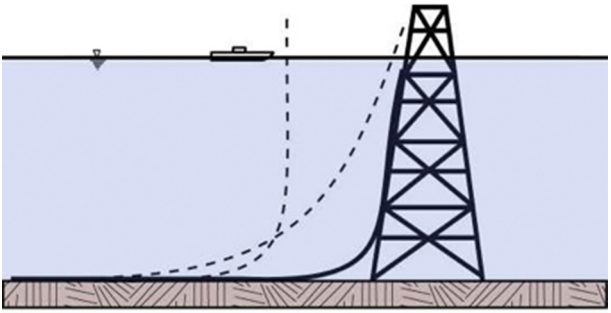

Figure 11.78 Barefoot method riser installation.

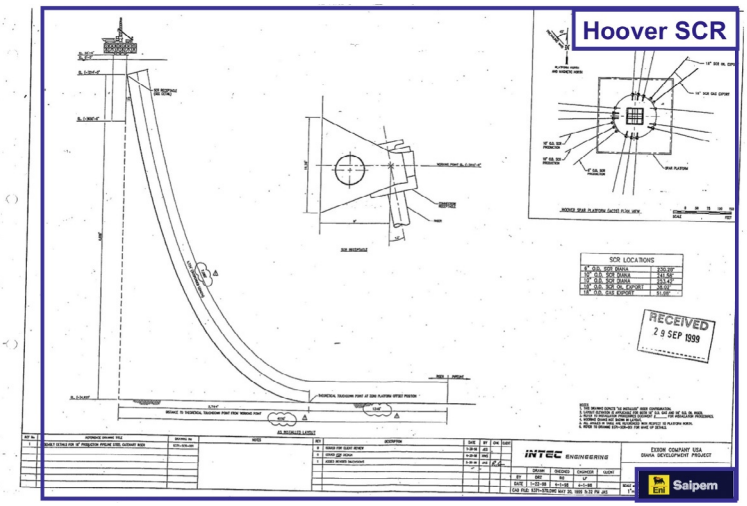

Figure 11.79 Steel catenary riser attached to ExxonMobil's Hoover SPAR platform in the GOM.

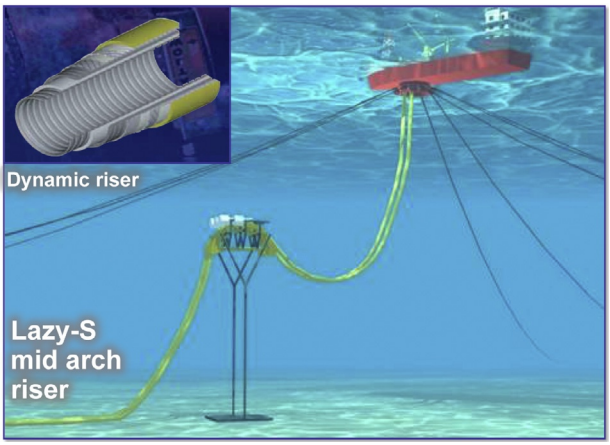

Figure 11.80 Two flexible risers installed in the lazy-S configuration using a buoyant mid-arch support.

a cross section of Wellstreams' dynamic riser that shows how flexibles are manufactured as unbounded hoses built up using specially formed steel wires and extruded plastic layers. Together, these layers provide a fluid barrier, pressure containment, axial tension capacity, and external protection while allowing relative bending of the flexible.

Figures 11.81 and 11.82 show two examples of deepwater hybrid risers: left, Total's Girassol tower and, right, ExxonMobil's Kizomba single-line offset riser (SLOR). Earlier, we discussed the Girassol multifunctional riser bundles being fabricated and surface-towed to the field. Once on location, the riser is stood upright using a controlled flooding procedure. Once vertical, the riser is attached to the seabed using a suction pile foundation. Flexible jumpers are then connected between the hybrid tower's buoyancy tank manifold and the FPSO. Although the SLOR is similar in configuration, as it is an individual flow line riser, it can be fabricated and installed in the field by the J-lay vessel.

11.5.2.4 Subsea tie-ins

Once the riser and the pipeline have been installed, they need to be connected by a suitable subsea tie-in method. Figure 11.83 is a schematic showing the hyperbaric welding habitat required to install a Z-spool connection to a 36 in. gas line. The illustration shows the pipe-handling frames, the airbags used to align the expansion spool, and the deployment of hyperbaric welding habitat. Figure 11.84 shows an L-spool used for the tie-in of a 16 in. gas line at Brent Alpha. The spool, which was fabricated onshore, is being lowered to the seabed using SEMAC's crane. Once in place, divers make up the flanged end connections using the Hydratight bolt tensioning system. Figure 11.85 shows a number of common connection methods. Swivel flanges are the most common connectors used for larger diameter pipelines and can be made

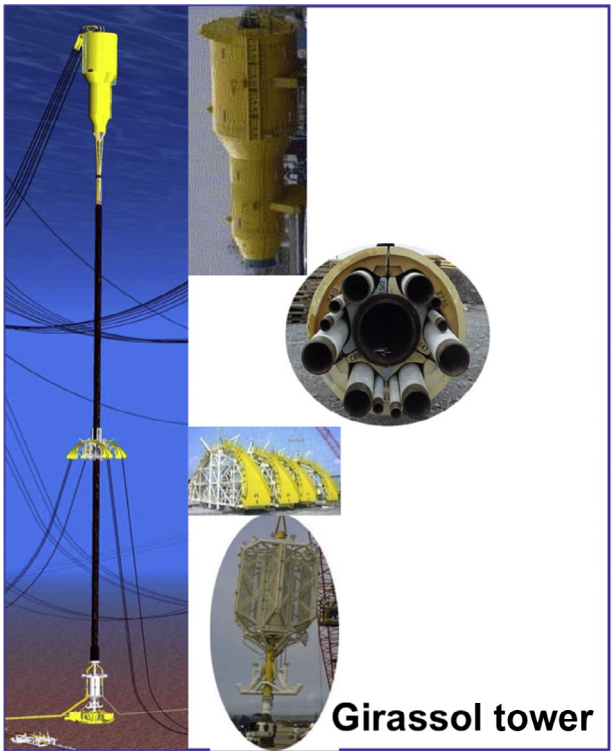

Figure 11.81 Total's deepwater Girassol hybrid tower.

up using both driver and driverless systems. There are a number of fully proved mechanical subsea connectors, such as the HydroCouple and collet grip, that are being used both for connecting new pipelines and for repairing existing ones. Hyperbaric welding has the advantage over other connectors as it provides maximum integrity of the joint, hence mitigating any potential future leak paths.

11.5.2.5 Landfall considerations

The more common landfall construction methods are the following:

- Cofferdam-onshore pull
- Cofferdam-offshore pull
- Horizontal directional drilling (HDD)-onshore pull
- HDD-offshore pull
- Tunnel and shaft

The open cut cofferdam with an onshore pull is the more conventional, straightforward pipeline landfall method. Figure 11.86 shows BP's Miller's landfall at St. Fergus, where the sand dune has been opened up with a cofferdam (Figure 11.87) installed across the beach through the tidal zone. The onshore linear pulling winch is mounted

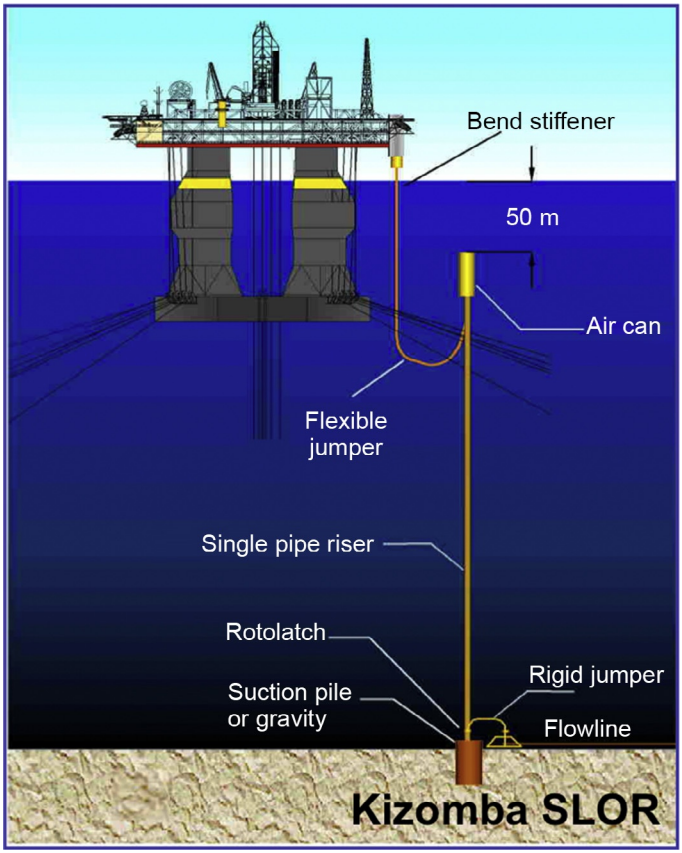

Figure 11.82 ExxonMobil's Kizomba single-line offset riser (SLOR).

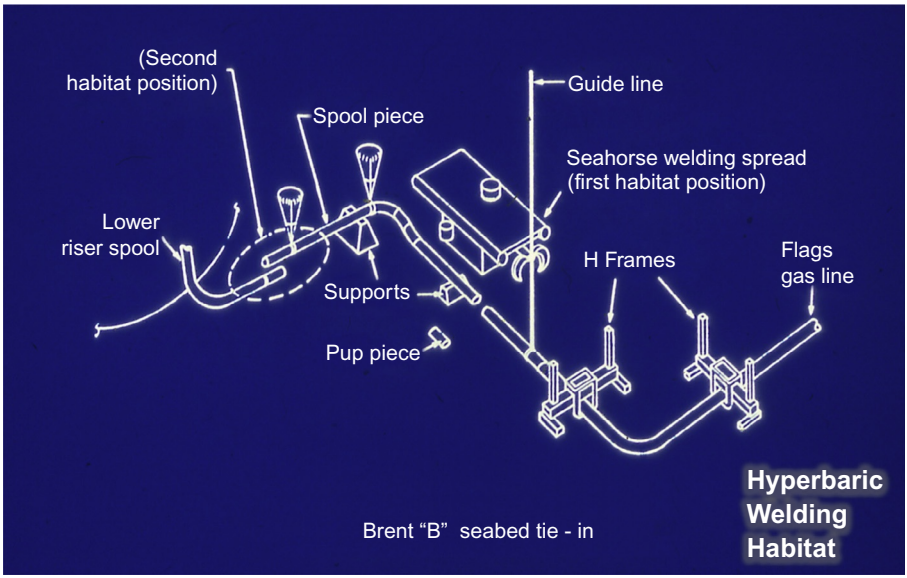

Figure 11.83 Hyperbaric welding habitat required to install a Z-spool connection to a 36 in. gas line.

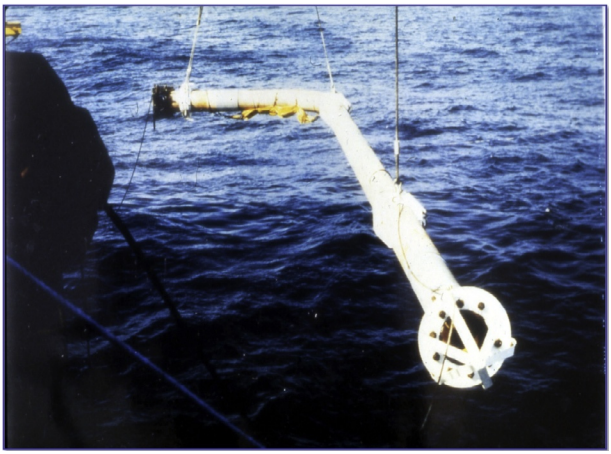

Figure 11.84 Flanged connection L-spool being lowered to seabed for tie-in into 16 in. gas line. Courtesy of Stan D Marsland and partners

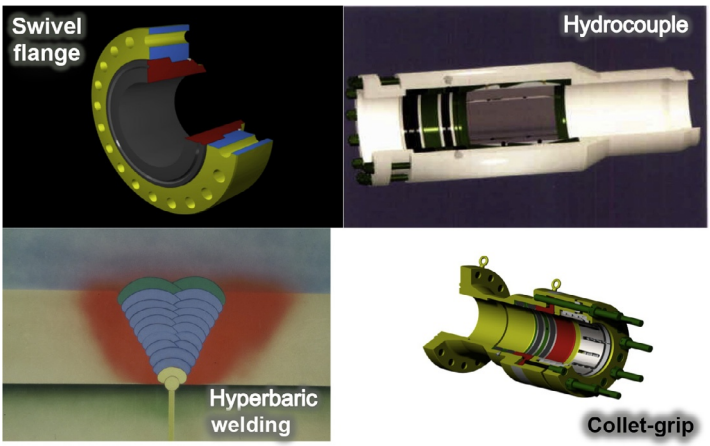

Figure 11.85 Various connection methods: swivel flanges, Hydrocouple, Hyperbaric Welding and Collet Grip.

behind the cofferdam (Figure 11.88). Saipem's lay barge Castoro Sei is anchored offshore to weld up the pipe pull section. Once the pull head has arrived onshore, the lay barge commences pipe laying towards the field.

Figure 11.89 illustrates an open cut cofferdam with an offshore pull for a 16 in. gas line at St. Fergus. The pipeline was made up onshore, in a number of strings, which are then welded together as the pipeline is pulled offshore by the pull barge. Even though the offshore pull method may not be as efficient as the onshore pull method, it does have the advantage of decoupling the dependence of the landfall on the timely arrival of the pipeline lay barge. Therefore, it offers scheduling flexibility in planning the work.

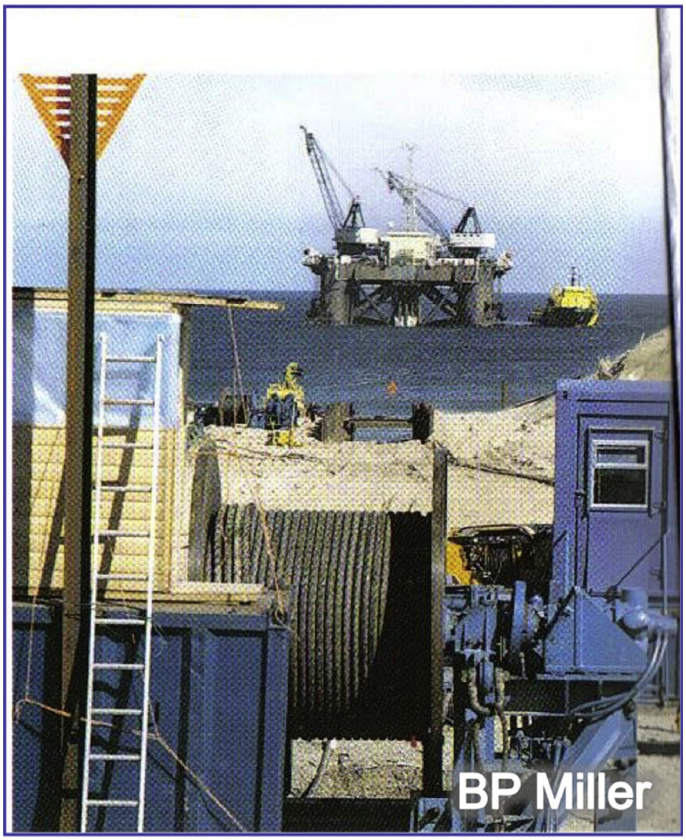

Figure 11.86 BP's Miller's landfall at St. Fergus.

Figure 11.87 Cofferdam installed across the beach through the tidal zone.

Figure 11.88 Pull hand winch mounted behind the cofferdam.

Figure 11.89 Open cut cofferdam with an offshore pull for a 16 in. gas line at St. Fergus.

HDD is a very efficient and environmentally friendly landfall construction method because it eliminates the need for expensive open cut civil works. Figure 11.90 shows the HDD method for an onshore pull. The HDD rig drills and prereams a pilot hole from onshore The lay barge lays a pipeline string on the seabed, which is then pulled into the prereamed hole by the onshore drilling rig. HDD can only be used where the subsoil conditions will contain the pressurized drilling fluids, which removes the cuttings, maintains the drilled hole, and provides lubrication. Otherwise, one may experience a breakout of the drilling fluid during drilling and possibly ending up with half a pipeline stuck in the hole.

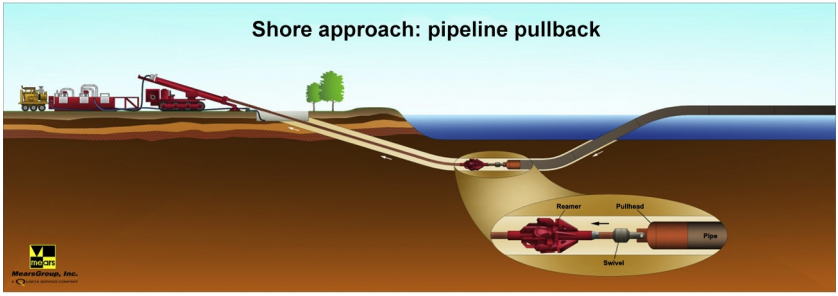

Figure 11.90 Horizontal directional drilling with an onshore pull.

HDD can also be used for an offshore pull, which also decouples the dependence upon the lay barge for the landfall. As shown in Figure 11.91, an offshore island cofferdam is built in the near shore. The HDD rig is then mounted on this island to drill the pilot hole and preream it, ready for the pipe pull. The pipe is strung together onshore and then pulled into the hole by the drilling rig. Afterward, the island is used as a winch holdback for the pipeline lay barge and a dry tie-in location for welding the HDD string to the offshore pipeline.

The tunnel and shaft method has been used for a number of pipeline landfalls, particularly where a cliff face rises steeply above the foreshore. As shown in Figure 11.92, the shaft connects the higher ground with a tunnel under the beach to a near-shore cofferdam.

11.5.2.6 Pipeline protection

Many offshore pipelines are buried below the seafloor to protect the pipeline from damage from anchors, trawling, or natural hazards. Trenching is a means of improving on-bottom stability as the trench wall helps to restrain any lateral movement and shield

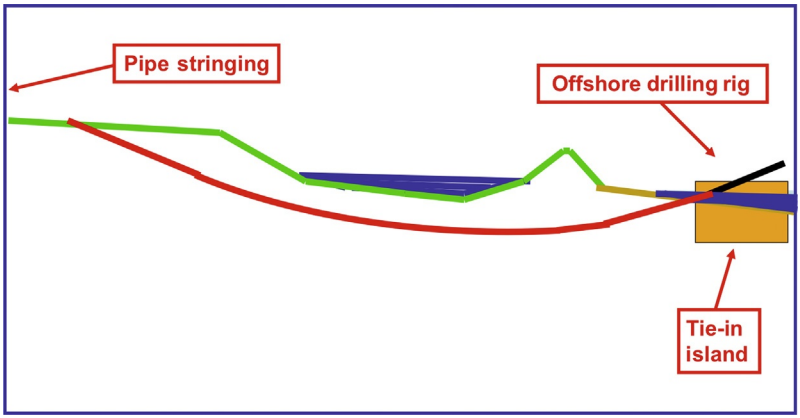

Figure 11.91 Horizontal directional drilling with an offshore pull.

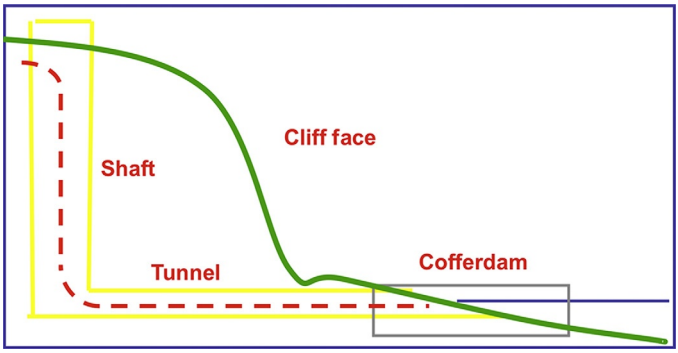

Figure 11.92 Tunnel and shaft landfall method.

the pipeline from the full force of the bottom currents acting upon it. Government regulations specify the minimum trenching/burial requirements for offshore pipelines. In shallow water, 50 ft. (15 m) or less, and for shore approaches, pipeline trenches are made by dredges. In deepwater and denser clays, trenches are made by plowing or jet sleds (Figures 11.93 and 11.94). Plowing may be done before the pipeline is installed or after the line is in place. Jet systems can be used in water up to depths of approximately 300 ft. (90 m).

11.5.2.7 Backfilling

Pipelines are not normally backfilled, but backfilling may be required for the following reasons:

- To provide additional stability that is required where a trench does not backfill naturally, especially near shore.

Figure 11.93 OES' jet sled Sumatran Tiger.

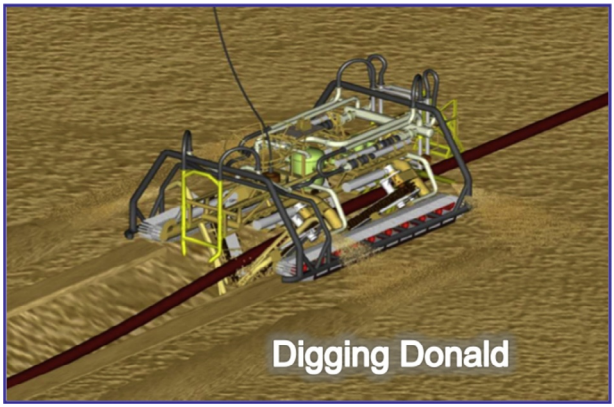

Figure 11.94 Allseas' mechanical cutter Digging Donald.

- To correct unacceptable spans along the seabed or within a trench.
- To provide additional thermal insulation for some production flow lines.

Figure 11.95 shows Jan de Nul's split hopper barge for dumping sand, while Figure 11.96 shows Jan de Nul's dumping vessel for correcting unacceptable spans.

In US waters, the minimum required cover over a pipeline in depths up to 200 ft. (60 m) is 36 in. (1 m). There is no requirement for pipe burial in water deeper than 200 ft. (60 m). Typically, pipe is buried with 5 ft. (1.5 m) cover for the first 300 ft. (90 m) outward from a platform riser, 16½ ft. (5 m) in anchorage areas, and 10 ft. (3 m) in fairways. Existing pipelines are generally crossed over, and sometimes, it may be necessary to lower the existing pipeline. A minimum of 18 in. (45 cm) separation must be maintained, and rubber-coated, articulated concrete mats are placed between the pipelines.

Figure 11.95 Jan de Nul's split hopper barge for dumping sand.

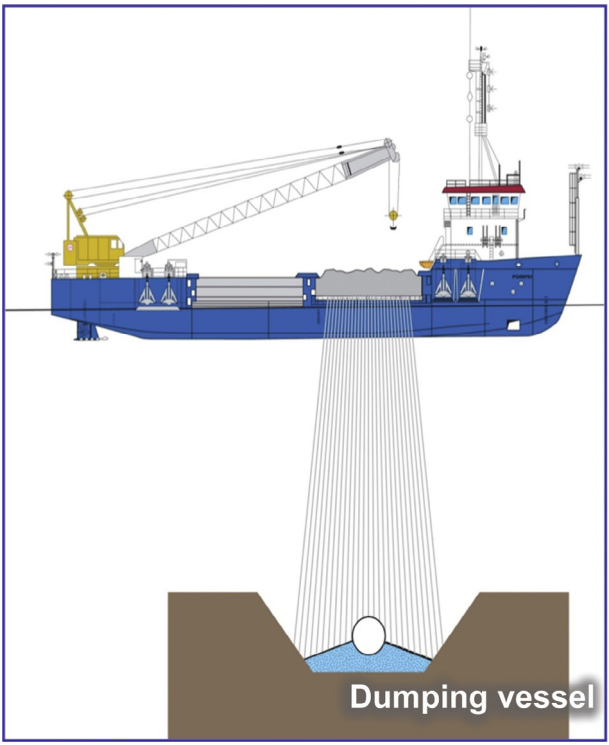

Figure 11.96 Jan de Nul's dumping vessel for correcting unacceptable spans.

11.6 Testing

Each pipeline must be pressure tested before it is placed into service. The purpose of the test is to demonstrate the integrity of the completed pipeline. It is essentially a stress test. Its purpose is to confirm that the pipeline can withstand the MOP plus a safety margin. The procedures, test pressures, and equipment required are discussed in detail in Chapter 12.

11.7 Case study

11.7.1 Hydraulic analysis

The East Kalimantan pipeline consortium pipeline route selection process began during January to April 2010 with the collection of oceanographic and meteorologic data (e.g., currents, waves, and water levels) at locations along the approximate pipeline route. A survey vessel with computerized free-span capability assessment surveyed

several alternate routes. Finally, a shallower water western option passing through the Mahakam river estuary was selected. Avoiding mudslides, boulder fields, or sharp changes of gradient and most of all avoiding excessive free span were the major considerations in selecting the final route.

The pipeline was required to supply up to 300 MMSCFD of dry gas based on a 12-h-on, 12-h-off operation. Because it was impractical to operate the upstream facilities on such a basis, the facilities were designed to operate on a steady-state mode, using the 500 miles (800 km) line to absorb the flow and pressure transients. In effect, the pipeline was designed as a storage reservoir, supplying gas by day and repacking it by night.

To optimize economy of the line pipe costs, the MAOP was kept close to the DP of 2250 psig (155.13 barg). The required delivery pressure at the LNG plant was 500 psig (34.47 barg). This left a system pressure of 1750 psig (120.67 barg) to overcome the total pressure loss between the discharge and the delivery. A hydraulic analysis was undertaken to investigate a number of supply interruption scenarios at different times in the demand cycle and with differing line sizes. The pipeline was designed according to ASME B31.8 Code, and a pipe diameter of 28 in. nominal was selected based more on consideration of supply integrity, rather than conventional hydraulic pressure drop criteria. In the normal steady-state mode, this pipeline can flow over 400 MMSCFD under the prescribed boundary conditions.

11.7.2 Construction

The East Kalimantan pipeline consortium project required the use of two different lay barges for the pipeline installation. For the first 435 miles (700 km), being the deep-water portion, a conventional semi-submersible lay barge, SEMAC-1, was used. For the last 65 miles (100 km) through the Mahakam river estuary, which required dredging, backfilling, and cable crossing in shallow water, a low-draft barge, Castoro V, was used. Both contracts were awarded to Saipem/EMC. Historically, the Balikpapan Bay is regularly affected by tropical cyclones from May to October, with wind speed exceeding 130 knots and wave heights reaching 60-70 ft. (18-21 m). Based upon the existing typhoon data, the contractor decided to commence pipelay operations in early December 2011 to allow the best opportunity for a continuous program between the end of one typhoon season and the start of the next.

Mobilization began in April 2011 in Schiedam, Holland, and the barge arrived on location in mid-November. Pipelay operations commenced on 1 December 2011 and SEMAC-1 installed the entire line in one continuous operation with an overall average pipelay speed of 366 joints (4.5 km) per day.

The high lay rate was achieved by utilizing two welding techniques, submerged arc and PASSO system. The submerged arc system was used for preparing double joints, while the PASSO system was utilized in the production line or the firing line welding. With only a few days of downtime, pipe installation was completed some 30 days ahead of schedule.

The second lay barge, the flat-bottomed Castoro V, was towed from Singapore. Pipelay for the second phase in the Mahakam river estuary commenced on 31 July

2012, but two successive typhoons slowed down the average lay rate for the first month to only 63 joints (0.78 km) per day. Pipelay steadily increased to 172 joints (2.2 km) per day. An interesting feature of this pipe installation was the crossing of the busy shipping channel in the estuary, which was not allowed to be blocked or closed by the lay barge. Using a specially developed traffic management procedure, Castoro V continued pipe laying, while marine traffic navigated around the lay barge.

In the deepwater portion, the pipe was secured to the bottom of the sea by concrete coating. A concrete coating of 190 lb/cu ft. with an on-site welded wire case was used to provide maximum reinforcing strength. In the shallow-water Pearl River estuary, dredging was required. This was performed by trailing suction hopper dredgers (TSHDs), and the dredged materials were dumped at designated waters approved by local authorities.

After completion of the pipe installation, the line was hydrostatically tested. The flooding of the pipeline required the longest ever subsea flooding operation in one run. This required a conventional six-pig train to drive the full 500 miles (800 km) line.

11.7.3 Commissioning and operation

After completion of the hydrostatic testing of the 500 miles (800 km) East Kalimantan pipeline, the line was thoroughly cleansed of all debris and gels used during pigging operation. Thereafter, the line was vacuum-dried and was filled with low-pressure nitrogen prior to commissioning. The line was commissioned during January 2013. While not much information is publicly available regarding its operational aspect, the pipeline has been steadily supplying gas to the LNG plant since it was commissioned in January of 2013.

Pressure testing and nondestructive examination

12

Each piping system must be tested and inspected to ensure that the system can be operated safely. ASME B31.3, B13.4, and B31.8 Codes and API Standards 1104, 571, and 574 prescribe pressure testing and nondestructive examination requirements.

12.1 Pressure testing

ASME Code and API Standards prescribe testing requirements. Pneumatic testing is allowed for certain process piping and low-pressure pipeline systems, but the majority of process piping and pipelines systems are tested with water.

12.1.1 General requirements

A hydrostatic test involves filling a closed piping or pipeline section with water and then pressurizing the line to a specified pressure and holding for a period of time, as required under the applicable code or under the requirements by the authorities having jurisdiction. Normally, long onshore pipelines are tested in several sections, whereas short lines are tested as a unit. Offshore pipelines are tested as one unit. Unaccounted for pressure decline during a test indicates a leak. The leak is located and repaired. After testing and prior to commissioning, the pipeline is cleaned to reduce the risk of corrosion caused by the presence of debris, to protect the downstream facility, and to maintain the quality of the transported product.

Prior to conducting the test, the pipe should be cleaned of any construction debris. If the pipe is a pipeline, the pipeline would be cleaned by pigging the line (refer to Chapter 13). After cleaning and prior to testing, a gauging plate is run through the pipeline to check for ovality and dents.

Before initiating a hydrostatic test, a profile of the test section should be developed which shows the

- maximum and minimum elevations,
- maximum allowable working pressure (MAWP) determined at the lowest elevation point,
- location of the fill and pressure pump,
- minimum pressure required at the pressure pump determined by the maximum pressure at the lowest elevation,
- water-source quality and discharge/disposal point.

The profile of the test segment provides a graphical representation of the test segment, which helps determine the location of air bleed vents, the fill rate, and pig velocity required to prevent air entrapment and verify that the test will not overpressure or underpressure the pipe in the segment.

Surface Production Operations. http://dx.doi.org/10.1016/B978-1-85617-808-2.00012-2
Copyright © 2016 Elsevier Inc. All rights reserved.

Large changes in elevation over short distances may require one to subdivide the initial segment into shorter segments, thus reducing the chance of overpressuring a segment.

The equipment required to perform a hydrostatic test include

- fill manifold complete with valves (rated at a minimum of 1.5 times the maximum test pressure),
- dewatering manifold complete with valves (rated at a minimum of 1.5 times the maximum test pressure),
- low-pressure/high-volume fill pump with filtration equipment,
- high-pressure positive-displacement pump,
- certified dead-weight gauge(s),
- chart-type pressure recorder,
- chart-type temperature recorder for the water,
- chart-type temperature recorder for ambient air,
- pressure gauges rated at 50-75% of the maximum test pressure,
- foam or urethane pigs,
- compressed air or nitrogen source for dewatering,
- discharge water filtration equipment.

12.1.2 ASME B31.3 requirements

12.1.2.1 Overview

Code requires leak testing of all piping systems, other than Category D systems. For Category D Fluid Service, the piping may be put in service without a leak test and examined for leakage during the initial operation of the system. This is the initial service leak test. For all other pipings, the following options apply:

- Hydrostatic test
- Pneumatic test
- Hydropneumatic test
- Alternative leak test

A leak test is required after any heat treatment has been completed. If a repair has been made following a leak test, the affected piping must be retested unless the repairs are minor and the owner waives the retest. Pressure is required to be held for at least 10 minutes and as long as is required to completely visually examine the piping system. Per § 45.2.7, test records are required but need not be retained after completion of the test if there is a certification by the inspector that the piping has satisfactorily passed pressure as required by ASME B31.3.

12.1.2.2 Hydrostatic test

The hydrostatic test is the preferred method of choice. The test is conducted at a pressure, P_T, of 1.5 times the design pressure, P, times a temperature correction factor. The temperature correction factor compensates for the fact that the test may be conducted at a lower temperature, where the material has a higher strength than at the design condition. The equation is

$$P_T = 1.5PR_r \tag{12.1}$$

where

P_T = minimum test gauge pressure,
P = design gauge pressure,
R_r = ratio of S_T/S or components without established ratings,
= ratio of the component rating at the test temperature to the component rating at component design temperature for components with established ratings (R_r cannot be less than 1 and cannot exceed 6.5. Use 6.5 for ratios higher than that),
S = allowable stress at test temperature.

If the calculated test pressure results in a nominal pressure stress or longitudinal stress greater than the yield strength of the material at the test temperature or a pressure more than 1.5 times the component rating at the temperature, the test pressure may be reduced to a value that does not exceed those limits.

12.1.2.3 Pneumatic test

A pneumatic test presents a significant hazard due to the amount of stored energy in the compressed gas. A rupture could result in an explosive release of this energy. Because of this concern, the pneumatic test pressure is specified to be 1.1 times the design pressure. The following two provisions are required: an adequately sized relief device and an intermediate hold at the lesser of either one-half the test pressure or 25 psi (170 kPa) with visual inspection of all joints are required prior to bringing the pressure gradually up to the full test pressure.

12.1.2.4 Hydropneumatic test

A hydropneumatic test involves having part of the system filled with water and part of the system filled with pressurized gas. The portion filled with water can be tested at a higher pressure than would be permitted for a pneumatic test. The portions of the system filled with compressed gas are subjected to the limitations and requirements for a pneumatic test.

12.1.2.5 Alternative leak test

An alternative leak test is allowed, with the owner's approval, when neither a hydrostatic nor a pneumatic leak test would be possible or safe. The alternative leak test has the following three requirements:

(1) Detailed inspection of all weld joints, including 100% radiograph or ultrasonic examination (UT) of all circumferential and longitudinal seam welds and liquid penetrant or magnetic-particle examination of all welds, including structural attachment welds, that cannot be radiographed
(2) Formal flexibility analysis
(3) Sensitive leak test

12.1.2.6 Sensitive leak test

A sensitive leak test is a required part of an alternative leak test code requirements. This test is performed at low pressures to test for leaks. In addition to the code required circumstances, a sensitive leak test is sometimes used by some owners as a tightness check of piping systems prior to placing them in operation and to check for leaks in piping systems assembled from shop-fabricated subassemblies. The code test pressure requirement is to be at least 15 psi (105 kPa) or 25% of the design pressure, whichever is less. Similar to a pneumatic test, the pressure is to be increased gradually up to an intermediate hold at the lesser of one-half of the test pressure or 25 psi (170 kPa), at which point a preliminary check for leaks must be made. The pressure is then gradually increased to the test pressure, at which point the sensitive leak test is performed.

12.1.2.7 Nonmetallic piping requirements

The leak test requirements described in the code are generally applicable to nonmetallic piping. The following exceptions apply:

(1) Hydrostatic test for nonmetallics other than thermoplastics (RTR and fiberglass pipe) and metallic piping lined with nonmetals is 1.5 times the design pressure, but not more than 1.5 times the maximum rated pressure of the lowest rated component in the system.
(2) For thermoplastic piping, a temperature correction factor is used, the same as for metallic piping, except that the allowable stresses for thermoplastics in Appendix B of ASME B31.3 are used.
(3) For metallic piping lined with nonmetals, the code test pressures for the metallic portion of the pipe apply.
(4) Pneumatic testing is prohibited on polyvinyl chloride (PVC) and chlorinated polyvinyl chloride (CPVC) because of the potential of brittle fracture.
(5) Alternative leak test is not permitted for nonmetallic piping and piping lined with nonmetals.

12.1.3 ASME B31.4 requirements

12.1.3.1 Overview

Code requires hydrostatic testing of internal pressure piping based on percentage of specified minimum yield strength (SMYS).

12.1.3.2 *Pipelines operating at a hoop stress* below 20% *of the SMYS*

Code requires a 1-h hydrostatic or pneumatic leak test. The hydrostatic test pressure shall not be less than 1.25 times the internal design pressure, as shown in Equation 12.2:

$$P_T = 1.25P \tag{12.2}$$

where

P_T = minimum test gauge pressure,
P = internal design pressure.

The pneumatic test gauge pressure shall be 100 psi (7 bar) or that pressure that would produce a nominal hoop stress of 25% of the SMYS of the pipe, whichever is less.

12.1.3.3 *Pipelines operating at a hoop stress* above 20% *of the SMYS*

Code requires a 4-h hydrostatic strength test. The hydrostatic test pressure shall not be less than 1.25 times internal design pressure, as shown in Equation 12.2. ASME B31.4, Paragraph 437.4.1(c), states under restricted conditions that liquid petroleum that does not vaporize rapidly may be used in lieu of water.

12.1.4 ASME B31.8 requirements

12.1.4.1 Overview

All piping systems shall be tested after construction to the requirements of the code except for pretested fabricated assemblies and welded tie-in connections where post-construction tie-in testing is not practical. Pressure testing with water is recommended; however, under certain circumstances, testing with gases may be required. If gases are used, they shall not exceed the maximum values stated in Code Tables 841.3.2.1 and 841.3.3.1.

12.1.4.2 *Pipelines operating at hoop stresses* Above 30% *of SMYS*

The recommended test medium is water. The permissible test media are listed in Table 12.1. In location classes 3 and 4, the test medium shall be water unless one of the following conditions applies:

Code paragraph 841.3.2(b)(1) and (2) in which case air may be used provided all of the requirements of paragraph 841.3.2(c)(1) through (3) are met:

(1) Ground temperature at pipe depths are sufficiently low during the test to cause the test medium to change state and cause damage or blockage that would damage the pipe or invalidate the test and use of chemical freeze depressants is not possible.

(2) Approved water of satisfactory quality is not reasonably available in sufficient quantity.

Code paragraph 841.3.2(c):

(1) The maximum hoop stress during pressure testing is less than 50% of the SMYS in location class 3 and less than 40% of the SMYS in location class 4.

(2) The maximum pressure at which the pipeline is to be operated does not exceed 80% of the maximum field test pressure.

(3) The pipe involved has been confirmed to be fit for service and has a longitudinal joint factor of 1.00.

Table 12.1 Test requirements for steel pipelines and mains to operate at hoop stresses of 30% or more of the specified minimum yield strength of the pipe (Courtesy of ASME B31.8)

1	2	3	4	5	6
			Pressure test prescribed		Maximum allowable operating pressure, the lesser of
Location class	Maximum design factor, *F*	Permissible test medium	Minimum	Maximum	
1 Division 1	0.8	Water	1.25 × MOP	None	TP ÷ 1.25 or DP
1 Division 2	0.72	Water	1.25 × MOP	None	TP ÷ 1.25 or DP
	0.72	Air or gas [(Note (1)]	1.25 × MOP	1.25 × DP	TP ÷ 1.25 or DP
2	0.6	Water	1.25 × MOP	None	TP ÷ 1.25 or DP
	0.6	Air [Note (1)]	1.25 × MOP	1.25 × DP	TP ÷ 1.25 or DP
3 [Note (2)]	0.5	Water [Note (3)]	1.50 × MOP	None	TP ÷ 1.5 or DP
4	0.4	Water [Note (3)]	1.50 × MOP	None	TP ÷ 1.5 or DP

DP = design pressure, MOP = maximum operating pressure (not necessarily the maximum allowable operating pressure), TP = test pressure.
General notes: (a) This table defines the relationship between test pressures and maximum allowable operating pressures subsequent to the test. If an operating company decides that the maximum operating pressure will be less than the design pressure, a corresponding reduction in the prescribed test pressure may be made as indicated in the pressure test prescribed, minimum, column. If this reduced test pressure is used, however, the maximum operating pressure cannot later be raised to the design pressure without retesting the line to a higher test pressure. See Paragraphs 805.2.1(d), 845.2.2, and 845.2.3. (b) Gas piping within gas pipeline facilities (e.g., meter stations, regulator stations, etc.) is to be tested and the maximum allowable operating pressure qualified in accordance with Paragraph 841.3 and Tables 841.3.2-1 and 841.3.3-1 subject to the appropriate location class, design factor, and text medium criteria. (c) When an air or gas test is used, the user of this Code is cautioned to evaluate the ability of the piping system to resist propagating brittle or ductile fracture at the maximum stress level to be achieved during the test.
Notes: (1) When pressure testing with air or gas, see Paragraphs 841.3.1(c), 841.3.2(a)-(c), and Table 841.3.3-1. (2) Compressor station piping shall be tested with water to location Class 3 pipeline requirements as indicated in Paragraph 843.5.1(c). (3) For exceptions, see Paragraphs 841.3.2(b) and (c).

12.1.4.3 Leak tests for pipelines operating at less than 100 psi (690 kPa)

Gas may be used as the test medium at the maximum pressure available in the distribution system at the time of the test. In this case, the soap bubble test may be used to locate leaks if all joints are acceptable.

Table 12.2 Maximum hoop stress permissible during an air or gas test

Test medium	Location Class, percent of specified minimum yield strength		
	2	3	4
Air or nonflammable Nontoxic gas	75	50	40
Flammable gas	30	30	30

Note: (1) Refer to Paragraph 841.3.2(c).

Testing at available distribution system pressures as provided for in Table 12.2 may not be adequate if substantial protective coatings are used that would seal a split seam. If such coatings are used, the leak test shall be 100 psi (690 kPa).

12.1.4.4 Leak tests for pipelines operating at 100 psig (690 kPa) or more

The test procedure used shall be capable of disclosing all leaks in the section being tested and shall be selected after giving due consideration to the volumetric content of the section and to its location. This requires experienced judgment rather than numerical precision.

In all cases where a line is to be stressed in a strength test to a hoop stress level of 20% or more of the SMYS of the pipe, and gas or air is the test medium, a leak test shall be made at a pressure in the range from 100 psig (690 kPa) to that required to produce a hoop stress of 20% of the MSYS, or the line shall be walked while the hoop stress is held at approximately 20% of the SMYS.

12.2 Nondestructive examination

12.2.1 Types of examination

12.2.1.1 Visual examination

It uses the naked eye to inspect the exterior and accessible internal surface areas of piping assemblies or components. It does not include remote examination (the use of borescope). Visual examination (VT) is used to check materials and components for conformance to specifications and freedom from defects; fabrication including welds; assembly of threaded, bolted, and other joints; piping during erection; and piping after erection. VT can be substituted for radiography which is called “in-process examination.” The requirements for VT are provided in ASME BPVC, Section V, Article 9.

12.2.1.2 Radiographic examination

Radiographic examination (RT) uses X-ray or gamma-ray radiation to produce a picture of the subject part, including subsurface features, on radiographic film for subsequent interpretation. It is a volumetric examination procedure that provides a means of detecting defects that are not observable on the surface of the material. Requirements for RT of welds are provided in ASME BPVC, Section V, Article 2.

12.2.1.3 Ultrasonic examination

UT detects defects using high-frequency sound impulses. The defects are detected by the reflection of sound waves. UT is also a volumetric examination method, which can be used to detect subsurface defects. It can be used as an alternative to radiography for weld examination. The requirements for UT of welds are provided in ASME BPVC, Section V, Article 4.

12.2.1.4 In-process examination

In-process examination (IP) involves the VT of the entire joining process, as described in paragraph ASME B31.3. It is applicable to welding and brazing for metals and bonding for nonmetals. Since RT is not considered to provide useful results in brazing and bonding, IP is used for these instead of radiography. For welding, it is permitted as a substitute for RT if specified in the engineering design or specifically authorized by the inspector. IP, however, is not as effective a quality control procedure as random radiography, and it should only be used for welds when special circumstances warrant.

12.2.1.5 Liquid-penetrant examination

Liquid-penetrant examination (PT) detects surface defects by spreading a liquid dye penetrant on the surface, removing the dye after sufficient time has passed for the dye to penetrate into any surface defect, and applying a thin coat of developer to the surface, which draws the dye from the defects. The defects are observable by the contrast between the dye penetrant and the color of the developer. PT is used for the detection of surface defects, for the examination of socket welds and branch connections in severe cyclic service that cannot be radiographed. The requirements are provided in ASME BPVC, Section V, Article 6.

12.2.1.6 Magnetic particle examination

Magnetic particle examination (MT) uses either electric coils wound around the part or prods to create a magnetic field. A magnetic powder is applied to the surface, and defects are revealed by patterns the powder forms in response to the magnetic field disturbances caused by defects. This technique reveals surface and shallow subsurface defects. As such, it can provide more information than PT. However, its use is limited

to magnetic materials. The requirements are provided in ASME BPVC, Section V, Article 7.

12.2.2 ASME B31.3 requirements

12.2.2.1 Overview

Code requires examination of the piping be performed by the piping manufacturer (for components), fabricator, and/or erector as a quality control function. The examinations include RT, for which UT or in-progress examination may be substituted, VT, and under certain circumstances MT or PT.

The owner's inspector oversees the work performed by the examiner. The inspector is responsible for verifying that all required examinations have been completed. The owner's inspector may be an employee of the owner, of an engineering or scientific organization, or of a recognized insurance company acting as the owner's agent.

12.2.2.2 Required examination

The required examination depends on the category of fluid service. Different degrees of examination are required for normal service, severe cyclic conditions, Category D, and Category M Fluid Services. Table 12.3 summarizes the required examination for metallic piping. More examination is required for hazardous services.

Examinations normally required are as follows:

- VT—100% of longitudinal welds, except those made in accordance with a listed specification.
- VT—random assembly of threaded, bolted, and other joints.
- VT—examination of erected piping for evidence of defects that would require or replacement and for other evidence deviations from the intent of the design.
- RT—normal service—not less than 5% of circumferential butt and miter groove welds shall be examined.
- VT—100% severe cyclic fabrication welds—each welder's or welding operator's work must be represented.
- VT—100% severe cyclic bolted, threaded, mechanical joints.
- RT—100% severe cyclic service—all circumferential butt and miter groove welds and all fabricated branch connection welds (alternate 100% UT).
- MT/PT—100% severe cyclic service—socket welds and branch connection welds that are RT shall be examined by MT or PT.

12.2.3 ASME B31.4 requirements

12.2.3.1 Overview

Welding shall be done under B31.4 and API Standard 1104. All welds shall be visually inspected. When the piping system operates at a hoop stress less than 20% of the SMYS, radiograph examination is not required. When the piping system operates at a hoop stress more than 20% of the SMYS, radiograph examination is required.

Table 12.3 Required examination for metallic piping

	Normal service	Severe cyclic conditions [Note (1)]	Category D	Category M
Materials and components [Note (2)]	Random VT	Random VT	VT to the extent necessary [Note (11)]	Random VT
Fabrication [Note (3)]	Min. 5% VT	100% VT	VT to the extent necessary [Note (11)]	100% VT
Longitudinal welds [Note (4)]	100% VT	100% VT	VT to the extent necessary [Note (11)]	100% VT
Bolted, threaded mechanical joints [Note (5)]	Random VT [Note (13)]	100% VT	VT to the extent necessary [Note (11)]	100% VT
During erection [Note (6)]	Random VT	Random VT	VT to the extent necessary [Note (11)]	Random VT
Erected piping [Note (7)]	VT	100% VT	VT to the extent necessary [Note (11)]	VT
Circumferential butt and miter welds [Note (8)]	5% random	100% RT [Note (12)]	VT to the extent necessary [Note (11)]	20% random RT [Note (12)]
Brazed joints	5% IP	NP	VT to the extent necessary [Note (11)]	NP
Soldered joints	NP	NP	VT to the extent necessary [Note (11)]	NP
Socket welds	NA	100% MT/PT	NA	NA
Nonradiographed branch connections [Note (9)]	NA	100% MT/PT	NA	NA
Structural attachments [Note (10)]	NA	NA	NA	NA

NP = not permitted, RT = radiographic examination (UT is always an acceptable alternative and IP is an acceptable alternative if specified in the engineering design or approved by the inspector), UT = ultrasonic examination, MT = magnetic-particle examination, PT = liquid-penetrant examination, VT = visual examination, IP = in-process examination, NA = no additional requirements (beyond otherwise specified VT).

Notes: (1) "Severe cyclic conditions" essentially only applies to normal Fluid Service. There are no provisions in ASME B31.3 for Category M Fluid Service under severe cyclic conditions; Category D piping is highly unlikely to be under severe cyclic conditions and there are no provisions in ASME B31.3 to cover that event. (2) Sufficient materials and components to satisfy the examiner that they conform to specifications and are free from defects. (3) For welds, each welder's or welding operator's work must be represented. (4) Except those in components made in accordance with a listed specification. (5) Assembly of threaded, bolted, and other joints. (6) Examination during erection of piping, including checking of alignment, supports, and cold spring. (7) Examination of erected piping for evidence of defects that would require repair or replacement, and for other evident deviations from the intent of the design. (8) Circumferential butt and miter groove welds. (9) Branch connection welds that are not or cannot be radiographed. (10) 100% PT or MT is required if the alternative leak test is to be performed. (11) Visual examination to the extent necessary to satisfy the examiner that components, materials, and workmanship conform to the requirements of ASME B31.3 and the engineering design. (12) In-progress examination, if used, must be supplemented by other nondestructive examination. (13) 100% VT is required if pneumatic testing is to be performed. (14) 100% RT is required if the alternative leak test is to be performed.

12.2.3.2 Required examination

Examination required includes the following:

- Minimum of 10% of each day's welds, random selection inspected by RT, or other accepted nondestructive methods
- 100% RT for the following:
  - Within populated areas such as residential subdivisions, shopping centers, and industrial areas
  - River, lake, and stream crossings
  - Railroad or public or public highway right-of-way, including tunnels and bridges
  - Offshore and inland coastal waters
  - Old girth welds in used pipe
  - Tie-in girth welds not hydrostatically tested

12.2.4 ASME B31.8 requirements

12.2.4.1 Overview

Welding shall be done under ASME B31.8 and API Standard 1104.

12.2.4.2 Required examination

Required examination includes the following:

- Systems operating at less than 20% of SMYS
  - Visual inspection on a sampling basis
  - Remove or repair defective welds
- Systems operating at more than 20% of SMYS
  - Nondestruction inspection required
  - Radiographic examination
- 10% of welds in location class 1
- 15% of welds in location class 2
- 40% of welds in location class 3
- 75% of welds in location class 4
- 100% of welds at compressor stations
- 100% of welds at river crossings
- 100% of welds at railroad and major highway crossings

Further reading

[1] ASME B31.1, Standard for Power Piping, ASME, New York City, 2012.
[2] ASME B31.3, Standard for Process Piping, ASME, New York City, 2012.
[3] ASME B31.4, Standard for Liquid Transportation Systems for Hydrocarbons, Liquid Petroleum Gas, Anhydrous Ammonia and Alcohols, ASME, New York City, 2012.
[4] ASME B31.8, Standard for Gas Transmission and Distribution Piping Systems., ASME, New York City, 2012.

[5] API RP 14E, Recommended Practice for the Design and Installation of Offshore Production Platform Systems, API, Washington, DC, 2007.
[6] The 2013 ASME Boiler and Pressure Vessel Code, Section VIII, IX, ASME, Fairfield, New Jersey, 2013.
[7] API Standard 1104, Standard Specification for Welding of Pipelines and Related Facilities, 19th ed., API, Washington, DC, 1999.
[8] API Standard 571, Standard Specification for Piping Code-Inspection, Repair, Alteration and Re-Rating of In-Service Piping Systems, second ed., API, Washington, DC, 1999.
[9] API Standard 574, Standard Specification for Inspection Practices for Piping System Components, second ed., API, Washington, DC, 1999.

Pipeline pigging

13

13.1 Overview

The major reasons for pigging a pipeline are to safeguard company assets and optimize pipeline efficiency. Using the correct type of pig and establishing the proper pigging program maintains the integrity and optimizes the efficiency of the pipeline while safeguarding both the environment and company assets.

Pipelines are designed and constructed based on two fundamental concepts: the pipeline must operate continuously and the required throughput must be obtained with the least capital and the lowest operating costs. Pigs play a major role in obtaining and maintaining these concepts. They help obtain and maintain efficiency by:

- removing any debris or foreign matter in the line
- removing any deposits, either liquid or solid, that might build up and restrict flow
- monitoring the operating and/or physical conditions of the line
- removing any substance that might damage the pipeline process system
- helping to prevent the formation of corrosion cells
- providing data on any perceived problems to enable informed decisions to be made
- providing an alternative to shutting down for stationary periodic testing

13.2 Reasons for pigging a pipeline

13.2.1 Safeguard assets

One of the more common mistakes made is to rely totally on corrosion monitoring and automatic corrosion control systems to decide when to run a pig. The monitoring system reliability depends upon where the probes, coupons, and/or sampling points are located. This is difficult to achieve its subsea lines and land lines that have significant gradients. Once pitting or channel corrosion has occurred, it is unlikely that a pig will be able to remove the water that will accumulate in these recesses (refer to Figure 13.1). Batch inhibition (running a slug of inhibitor between two pigs) is recommended as part of any corrosion control program.

Surface Production Operations. http://dx.doi.org/10.1016/B978-1-85617-808-2.00013-4
Copyright © 2016 Elsevier Inc. All rights reserved.

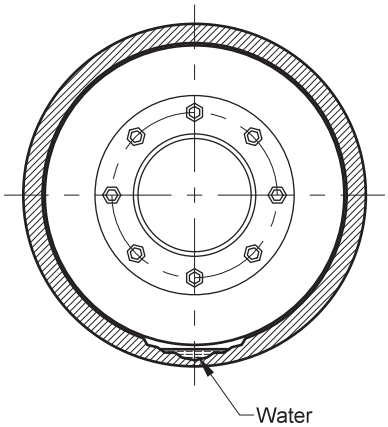

Figure 13.1 Effect of channel and pitting corrosion.

Example 13.1 *Effect of pipeline ID on pipeline efficiency*

Given:

A simple, short, straight section of water pipe 12 in. (300 mm) diameter.

Determine:

Flow rate reduction and pressure required to re-establish initial pressure if the inside diameter is reduced by 5% (15 m) by both a smooth and uneven internal deposit.

Solution:

The flow rate reduction for a smooth deposit at constant pressure is over 10%. To bring the flow rate back to its original level requires the initial pressure to be increased by almost 30%. If the deposit is uneven, the resulting turbulent flow will cause the pipe ID to be reduced by 15%. Flow rate would be reduced by approximately 35% while the pressure to overcome these losses would need to be increased by more than 140%.

13.2.2 Government regulations

The United States regulatory bodies require hydrocarbon pipelines be designed to enable them to be pigged. In most countries, the authorities having jurisdiction require that licenses to construct and operate pipelines are dependent upon them being able to be pigged.

13.2.3 Practical needs

Pigging is required during each phase in the life of a pipeline. During construction, pigging is required to remove construction debris from the line, acceptance testing (water filling, dewatering, etc.), and commissioning. During operations, pigging is required to clean the pipe wall, remove condensate, separate product (batching), and apply inhibitors. During inspection, pigging is required to check for physical

damage (geometry), to detect corrosion, laminations, or cracking, to detect leak detection, and to take samples and line covering and spanning (subsea).

Pigging is required for general maintenance and repair for corrosion inhibition, pre-inhibit, pre-inspection cleaning, decommissioning, isolation, and recommissioning. Pigging is required during renovation for such things as gel pigging, applying in situ coatings, chemical cleaning, scale removal, and cleaning for product conversion. During decommissioning, pigging is used to remove product, to clean pipe wall, and for inspection/testing.

It must be remembered that all pipelines are different, as they have different diameters, lengths, contents, geometry, operating pressures and temperatures, materials, wall thicknesses, locations, contractors, owners and operating philosophies, codes, and comply with different authorities having jurisdictions. Therefore, pig selection and pigging program must be tailored to suit the particular needs as well as the characteristics of the individual pipeline and its operation.

13.2.4 Pigging during pipeline construction

13.2.4.1 General considerations

Pigging during construction is frequently performed on sections of pipelines that are shorter than the entire pipeline, often using compressed air as the means of propulsion. Pigs perform best if they are run at or near constant speed, thus some means of speed control, other than constant input, is required, thus eliminating speed excursion. One method of maintaining constant differential pressure and thus constant speed is to close the downstream end of the pipe section, pressurize the entire section, and then release pressure downstream as air is inserted upstream. The differential pressure required to keep the pig moving may be only 10% of that required to start the pig moving. Excessive or uncontrolled pig speed can be very dangerous.

A means of restraining the pig at the receiving end of the pipe while releasing the pressure ahead of the pig is required; otherwise, the pig will become a projectile. Catching devices can be something as simple as a field made pig catcher or as sophisticated as an engineered pig trap. Many contractors build temporary traps that are reused during pipeline construction. Figure 13.2 shows a typical pig catcher when driving with air while Figure 13.3 when driving with water.

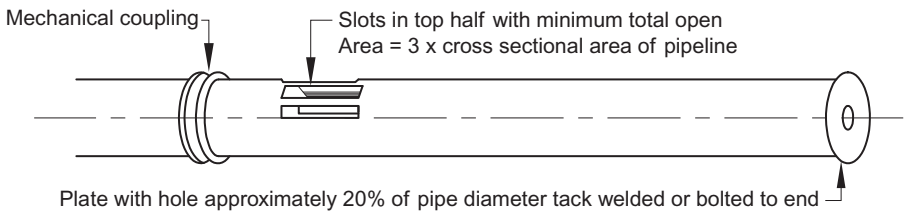

Figure 13.2 Typical pig catcher when driving with air.

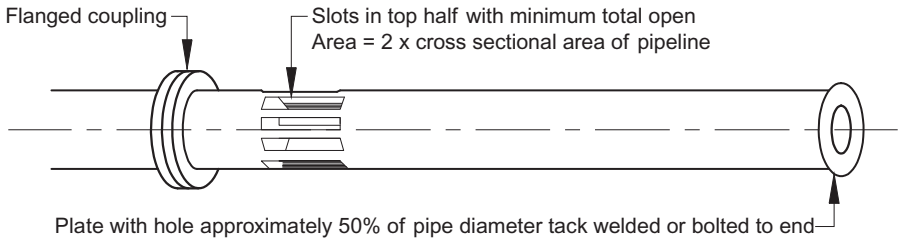

Figure 13.3 Typical pig catcher when driving with water.

13.2.4.2 Debris removal stage

During the construction of any new pipeline, debris, sand, stones, welding rods, and rags will be left inside the pipe. Wildlife, like mice and rabbits, will find their way inside the pipe in spite of the use of "night caps." Foreign material must be removed prior to beginning cleaning or gauging runs. The type of pig used depends on the pipe diameter and length, topography, whether the pipeline is onshore or offshore, and if the soil is sandy or rocky. Several debris-removal pig runs may be necessary and, because of duty, it is good practice to use wear disks on the front of the pig if the pipeline is relatively long.

Compressed air is normally used to push the pig through the pipeline. Each end of the pipeline section is fitted with "test ends" or "lay-down" head (long pig trap used on land lines) or temporary pig traps that are used to launch and receive the pig. The receiving end should be long enough to accommodate collected debris. On offshore pipelines, the pipeline is usually capped at each end and laid down on the seabed, then tied in at a later date.

13.2.4.3 Cleaning stage

Following the debris-removal pig runs, a wire brush pig is run through the pipeline to remove stubborn debris including mill scale, weld bead slay, etc. from the pipe wall. Normally, more than one cleaning run is required. Compressed air is usually used to push the cleaning pig through the pipeline. If a series of runs will be made, the launcher and receiver test ends should be long enough to accommodate the number of pigs used. A manifold system may be required.

13.2.4.4 Initial gauging

After the debris removal and cleaning runs have been completed, gauging pigs are run. Gauging runs are necessary to determine that there is nothing protruding inside the pipeline which might cause an obstruction. Gauging also ensures that the ovality of the pipeline is within accepted tolerances.

Pigs are fitted with a circular "gauging plate." The gauging plate is made of mild steel, usually aluminum, that is machined to a specified diameter, typically 95% of the smallest diameter of the installed pipeline. If the plate sustains any damage, an

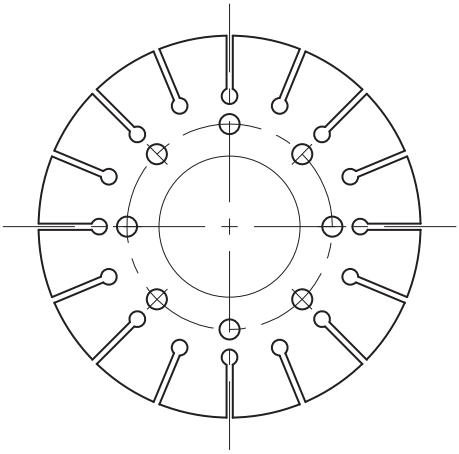

Figure 13.4 Typical slotted aluminum gauging flange.

investigation should be carried out to establish the possible cause of the damage and remedial action required. Gauging pigs are pushed through the pipeline with air.

Gauging plates, installed between the pig seals, protect plates from any damage other than that caused by a reduction in diameter within the pipeline. As shown in Figure 13.4, the gauge plates are cut into segments to help identify the shape of any restriction. Once the obstructions have been removed, it is necessary to rerun the gauging pig to verify that all pipe diameter reductions have been removed from that section of the pipeline.

13.2.4.5 Geometry or caliper pig

When the gauging plate is damaged, it is impossible to determine the location or what caused the damage. In severe cases, the pig may not return and become stuck in the pipeline. These problems can be overcome by using the instrumented "Geometry" or "Caliper" pig. These instrumented pigs identify the location of any nonconformity and are capable of providing a catalog of information on the entire pipeline. The Caliper pig surveys the pipeline without making any metallic contact with the pipe wall. The generated pigging report can be used to locate and make all the repairs needed. The report provides useful information such as the number of joints between launcher and receiver, any changes in inside diameter, exact location of any joint that is outside the allowable tolerances for ovality, location of any protrusions, and whether valves are fully open. Caliper pigs are normally run during dewatering of the pipeline following hydrostatic testing and periodically during the operational life of the pipeline.

13.2.4.6 Hydrostatic testing

Once the pipeline has been accepted as laid in good condition, it is necessary to perform a pressure test for leaks and ensure the pipeline can safely operate at the design pressure. All piping codes (ASME B31.3, B31.4, and B31.8) require hydrostatic

testing prior to commissioning and periodically throughout its life to reconfirm integrity and upgrade MAOP.

It is important to ensure the pipe is filled with a column of water. This is achieved by inserting a pig(s) in the launcher before pumping starts. The upstream pigs ensure all the air is removed. An air regulating vent is installed at the receiver which controls movements of the pig(s) at the receiving end. Air vents should be installed at all high points on the pipeline system to prevent vapor locks, etc.

13.2.4.7 Dewatering

Once the hydrostatic test is completed, the water inside the pipe must be removed by a series of pipes pushed through the pipeline normally with compressed air. It is not uncommon for long pipelines to be hydrostatic tested in sections. Test water is transferred from one section of the pipe to the next section during the dewatering operation.

The type of dewatering pig(s) used is based on

- pipeline features such as pipeline length, diameter, wall thickness, internal configuration, location of main line valves, piping configuration at the ends of the line, changes in pipeline elevation, and internal conditions of the pipeline and
- air compressor's ability of running the pig at a speed of at least 1 mph (1.6 kph) under these conditions.

The discharge outlet and connecting discharge pipe should be as large as possible and fitted with a valve to enable the pipeline to be completely shut off or to be throttled to regulate the rate of discharge. The receiver end should be prepared for any violent surges of discharge water that may occur as the pig approaches the receiving end if some compressed air has bypassed the pig.

13.2.4.8 Drying

If the product to be transported in the pipeline requires a dry line, i.e., natural gas, then, after dewatering, the line should be dried either by blowing dry air through the line in conjunction with foam pigs, use nitrogen, or vacuum drying.

The dry air and foam method is used mainly on onshore pipelines and is capable of achieving a high degree of drying and cleanliness. The first step is to run light weight polyurethane foam swab pigs with extremely dry compressed air, typically with −90 °F (−68 °C) atmospheric dew point temperature. The swab pigs wipe out and soak up the residual water, while the dry air absorbs as much water as it can and carries it out of the pipeline. Swab pigs are run continuously until they are received dry. On long pipelines, it is not uncommon to make 200 to 300 runs. The next step is to run polyurethane foam pigs equipped with fine steel wire brushes on a continuous basis until they are received without any material packed into the bristles. The purpose is to scratch loose the loosely adhered rust and mill scale and break up any packed dirt that may have settled out of the hydro-test water. Additional foam pigs are run if it is necessary to remove the loose material that remains in pipeline in the form of very fine dust. Swabs are run continuously until they are clean enough to meet a specified dew point.

The vacuum drying method works on the principle that the boiling point of water is determined by pressure. Reducing the pipeline pressure, to below atmospheric pressure, causes the remaining water film on the pipe wall to boil. The water is then removed from the line in the form of steam. This process continues until it reaches some predetermined dew point. This method is long and expensive but yields excellent results.

13.2.4.9 Commissioning

13.2.4.9.1 General considerations

Commissioning is when the completed pipeline is filled with product and is at the point where it is ready for operation. Commissioning almost always involves the use of pigs and may often require "slugs" of other substances such as methanol, glycol, diesel, etc. to be pumped through ahead of the product. Slugs, if used, contain between two or more pigs and are designed to avoid product contamination as, particularly with hydrocarbons, there may otherwise be a risk of explosion or perhaps serious blockage due to hydrate formation.

13.2.4.9.2 Water pipelines

May not require dewatering after hydrostatic testing as the test water may serve to commission the line.

13.2.4.9.3 Product pipelines

The method used to commission a product's pipeline depends upon the type of the product to be transported. Most long distance product's pipelines carry refined products so it is usually necessary to remove the water prior to commissioning. Since air will invariably be left in the pipeline, the pigs must be able to separate the air from the product and from any other substance in the line which could create a hazard when exposed to air. Some product pipelines may require running several pigs, perhaps in a "train" with say methanol or other water absorbing chemicals in "slugs" between the pigs.

13.2.4.9.4 Natural gas pipelines

It is important in natural gas pipelines that the moisture content level within the pipeline be at a very low level to prevent the formation of hydrates. One method of commissioning a long distance gas line is shown in the five steps in Figure 13.5.

(1) Inject nitrogen, equivalent to 10% of the volume of the pipeline at atmosphere pressure, prior to inserting the first pig.

(2) A slug of methanol is then injected equivalent to 7.5D US gallons per mile of pipeline (17.6D liters per km) where D = pipe ID in inches, followed by the second pig.

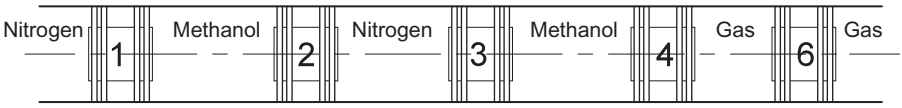

Figure 13.5 Typical pig train for commissioning a gas pipeline.

(3) Next, nitrogen equivalent to a minimum of 0.5 miles (0.8 km) of line when compressed to commissioning pressure is injected and prior to injecting pig three.
(4) A second slug containing the same volume of methanol as the first one is then injected followed by pig #4.
(5) This completes the "train" but the fifth pig may be run if it is considered necessary to remove any excess methanol.

For long lines, especially those located offshore, the methanol is injected in the form of a gel to provide a better seal as well as some lubrication.

13.2.4.9.5 Crude oil pipelines

Most crude oil contains some water and as such free water knockouts and water treating facilities are normally installed as standard equipment at the destination point. Thus, it is usually not necessary to dry the pipeline after the line has been dewatered.

13.2.4.9.6 Other pipelines

Commissioning procedures depend on material of the pipeline, product in the pipeline, company policies, and government requirements. Combustible products need air in which to burn and a spark or compression to ignite the resulting mixture; these are two aspects which generally command most attention. Air is usually eliminated by using pig trains in conjunction with slug of other liquids or gases.

13.2.4.9.7 Baseline surveys

When the pipeline has been filled with product and the line is at or near operating pressure, it is a good time to conduct an inline inspection using a geometry pig. This inline inspection will help identify changes in the pipeline such as settling within the ditch or loss of support due to erosion (i.e., "spanning") in subsea lines, which can expose the pipe to points of localized loading that could result in damage to the bottom of the pipe.

When the pipeline is new and known to be in good condition, it is also an ideal time to run other instrumented pigs to provide a base line survey for comparison with future runs. The baseline survey can be used to:

- Provide a baseline for comparison with future surveys.
- Provide important data for monitoring the condition of the pipeline throughout the pipeline's operating life.
- Compare and locate damage that may have been caused by third parties operating over the pipeline, but which did not create enough damage to cause a rupture at that time.
- Provide important data for monitoring the condition of the pipeline throughout the pipeline's operating life.

13.2.5 Pigging during pipeline operation

13.2.5.1 Debris removal

It is essential to remove wax, scale, and other forms of solids from the pipe walls to protect the company's investment and maintain operational efficiency. Prevention of corrosion is also paramount. Free water, even in crude oil lines, collected in the bottom

of pipelines must be both swept out and inhibited. An inhibition program alone is normally not sufficient as water collects under the dirt, sand, wax, corrosion by products, etc. and prevents the inhibitors from working. Pigs remove the debris which allows the inhibitors to work. The same situation arises if there are bacterial corrosion problems by sulfate-reducing bacteria.

Once a pipe experiences pitting corrosion, it is difficult to remove any accumulated water or debris from the pits. It creates a progressively worsening situation that will probably require drastic and very costly inhibition program to contain it.

13.2.5.2 Condensate removal

Condensate drop-out is a common problem on many gas pipelines. The rate at which the condensate drops out is dependent on gas velocity (flow rate). Condensate settles out in low spots and reduces the effective bore. This restriction causes the gas flow to constantly increase and pick up condensate and carry it down the line until it arrives at the plant as a very large slug. Slug catchers are designed to handle the maximum likely volume. When a slug exceeds its capacity, condensate overflows to the processing facility and causes both damage and facility shutdown. Condensate drops out of untreated gas continuously. Pigging is intended to remove condensate in a controlled and regulated manner; thus, spheres are often used in spite of their poor sealing qualities.

13.2.5.3 Cleaning

13.2.5.3.1 Crude oil pipelines

All pigs will remove some wax. Unless the right type of cleaning pig is used, a lot of wax will be left behind and smeared on the inside of the pipe wall. Elastomer blades work well to remove the wax from the inside surface and are self-cleaning. Most cleaning pigs have a means for product bypass through the pig. As shown in Figure 13.6, flow enters

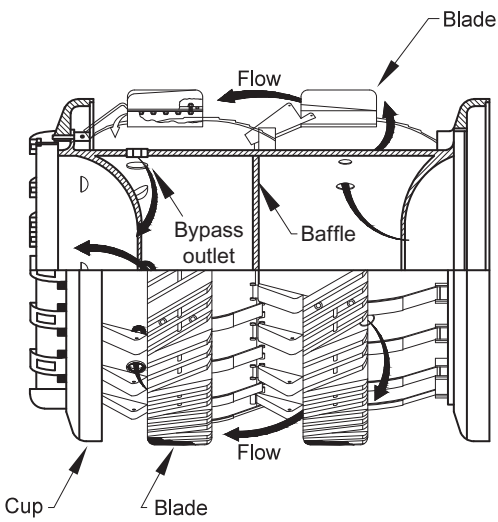

Figure 13.6 Bypass path through a pig body.

the back of the pig, passes by the cleaning devices, and then exits through the front of the pig. The bypass lets the pig slip slightly in the stream so that the wax that has been removed can be floated away rather than be pushed into a solid mass. It avoids the problems that could occur if the wax arrives as a solid plug at the receiving trap.

13.2.5.3.2 Natural gas pipelines

Dust with lube oil carry over from compressors will create an internal coating that would reduce the pipeline efficiency. The type of cleaning required depends on whether the pipe is coated or not. If the pipe is not coated, then the pig can be equipped with brushes that clean the inside of the pipe and with repeated runs create a smoother surface, thus increasing the flow efficiency. On the other hand, if the pipe is internally coated, the pig should not be equipped with cleaning devices that could damage or remove the coating. The pig should be fitted with elastomer cleaning devices such as polyurethane blades to avoid damage to the coating. Elastomer blades clean the internal coating and with repeated runs, polish the surface.

13.2.5.3.3 Product pipelines

Product pipelines may have a need to remove fine solids and water that may have settled from the product as it traveled the pipeline. Any pig that provides a seal in the pipe could be used to remove the water from the pipeline. A better choice would be a cleaning pig with a cleaning device attached, such as a simple foam pig with strips of fine wire brushes bonded to the outside of its body.

13.2.6 Inspection pigging

13.2.6.1 Utility pigs

Utility pigs are used during construction, operations, cleaning, and dewatering.

13.2.6.2 Intelligent pigs

Intelligent pigs are referred to as “in-line inspection (ILI)” tools or “smart pigs.” They provide information on the condition on the pipe and/or its condition. These pigs are not sold but are tools that are used by specialized inspection-pigging companies to gather the data on the pipeline. Data is analyzed to determine and report on the condition of the line. Many inspection surveys are run during or soon after commissioning in order to provide a “baseline” survey. Baseline surveys allow subsequent inspections to be compared with initial results and establish the average rate at which certain changes are taking place.

Typical information provided by the ILI includes:

- Diameter/geometry measurement
- Curvature monitoring
- Temperature/pressure recording
- Bend detection and measurement
- Metal loss/corrosion detection
- Photographic inspection

- Crack detection
- Wax-deposition measurement
- Leak detection
- Product sampling
- Detection of loose coating on the outside of a pipeline.

13.2.7 Pigging for general maintenance and repair

13.2.7.1 General considerations

Pigs are used as part of maintenance and repair program. Its uses include batch inhibition, pre-inspection cleaning, and isolation.

13.2.7.2 Batch inhibition

Running a batch of inhibitor between two pigs ensures that the whole of the internal surface of a pipeline is wetted. However, there is no way of guaranteeing complete coverage, especially at the top center or at 12 o'clock position (Figure 13.7). Preferential corrosion occurs in the pipe that has only partly been wetted by the inhibitor. The metal loss that would have occurred over the entire pipe surface is concentrated on the small area that has not been wetted, thus making the situation worse, rather than better.

13.2.7.3 Pre-inspection cleaning

For optimum performance, ILI tools require pipelines to be very clean. Standard pigs are not capable of cleaning the pipeline to meet the cleaning requirements of ILI tools. Sometimes, ILI surveys have to be aborted due to dirt or wax. ILI tools typically require a separate pigging program with specially designed pigs. Magnetic flux leakage (MFL) tools are used because of their powerful brush/magnets which remove the residual film of wax that has been left behind by the cleaning pig. Ultrasonic pigs are not used because they experience severe problems due to the attenuation of the signals by residual wax.

13.2.7.4 Isolation

A *pig with an* "interference fit" with the pipe bore is used to create a seal. If the pig is stopped within the line and fixed in some way, it is a means of isolating sections of the line for modification, maintenance, or repairs. A longitudinal weld bead can create a

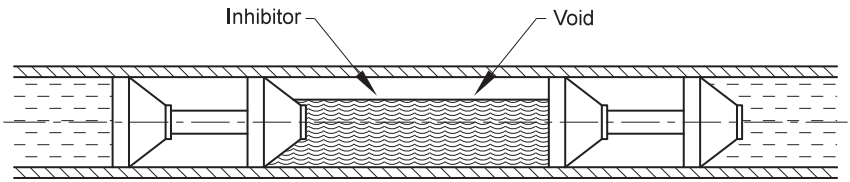

Figure 13.7 Potential problem with batch inhibit.

leak path past the seal. It is difficult to restrain the pig in large diameter lines against differential pressure loads.

Over-inflated spheres are used to provide a seal within a pipe that is being repaired, thus preventing flammable products from being exposed to welding and cutting torches.

Hyperbaric spheres are special type of spheres that incorporate hyperbaric chambers which are often used in subsea tie-ins. Due to their shape, they have very limited area in contact with the pipe wall and thus can only be used where there is no differential pressure.

Plugging pigs are designed to stop at some predetermined point. They are remotely actuated in order to create a seal and deactivate to either continue their journey or to reverse pump back to their starting point. Due to uncertainties, most plugging pigs are limited to operations close to access or "launch" point and are attached to an umbilical or "tether."

13.2.8 Pigging during renovation

13.2.8.1 Gel pigs

Unlike other pigs, which are "designed," gel pigs are "formulated." They can be made to meet almost any density. They are preformed pigs that are shipped to site within a metal mold. Most applications require them in jelly-like state (similar to wallpaper paste). The material is combined with a wide range of other chemicals to perform other tasks, such as foaming and degreasing agents and corrosion inhibitors. Gel pigs must be manufactured on-site and have a limited life since they are biodegradable.

Gel pigs are used to remove "stuck" pigs and create high-sealing pigs and temporary isolation of a pipeline for repair. They are a major component in cleaning pipelines where debris to be removed after construction is too great to be removed by standard pigs. Gel is trapped between pigs to form "slugs" which pick up the debris, hold it in suspension, and carry it out of the line.

13.2.8.2 Applying in situ coating

13.2.8.2.1 General considerations

The three primary factors that influence the success of any coating project are surface preparation, coating selection, and coating application. Making the wrong choice in any area may cause premature failure of the coating.

13.2.8.2.2 Surface preparation

It is imperative that the inside of the pipe be thoroughly clean. All deposits must be removed that could interfere with the coating bond such as rust, scale, and salts. Once cleaned, the line should be completely dry and under a purge of an inlet gas to prevent flash rusting.

Common cleaning processes include scouring the inside of the pipeline with an abrasive material, like flint, which is propelled in a low-pressure, high-velocity stream of nitrogen. The flint particles impacting the wall of the pipe at a low angle chips away

the deposit. The removed material is then carried through the line with the nitrogen and collected at the outlets. After abrasive cleaning, pigs and/or solvents are used to remove any remaining dust. Cleaning may expose leaks that must be repaired before coating.

13.2.8.2.3 Coating selection

A large number of coatings have been used to internally coat in-place pipelines. The coating must have specific "thixotropic" properties, which allow the coating to be spread onto the pipe wall and then immediately "gel" to prevent it from running or sagging.

The two-part polyamide-cured epoxy coating is the most commonly used coating. It is recommended for lines carrying potable, fresh, and salt water; crude oils; transportation fuels; natural gas; and some solvents. The final selection should always be discussed with an expert in in situ coatings. It is always a good practice to install a test spool cleaned and coated under field conditions to assure compatibility with the intended service.

13.2.8.2.4 Coating application

Proper application is achieved by placing the coating material between two pigs and propelling the "pig train" through the line. Various types of pigs, including multiple cup-and-disk, bidirectional disk, and spheres, are used. Coating thickness is determined by the size of the cup, pigs, and the coating train speed. The required coating thickness is achieved by controlling the differential pressure across the coating train and thus the train speed. Nitrogen is used as both the driving force and back pressure.

13.2.8.3 Chemical cleaning

Chemical cleaning is used when conventional pigging methods are unable to clean the line sufficiently. The type of chemical, strength, contact time, and overall procedures are dictated by the circumstances and each situation is different. It is important to seek professional advice before using this approach.

13.2.8.4 Scale removal

Typical scale deposits such as paraffin, asphaltene, sediments, silica, coke, iron, sulfides, calcium, or other corrosive products can be removed by the proper use of aggressive cleaning pigs. There are various grades of wire brush foam pigs. Utility pigs are equipped with brushes or steel blades. Specialty pigs specifically designed for scale removal include "studded foam pigs" and "pinwheel pigs."

Studded foam pigs are simple pigs that can remove hard deposits from the interior of a pipe. The pig, being symmetrical, permits travel in both directions, which is important when clearing industrial heaters and pipelines. The body is formed of high-strength polyethylene, polypropylene rubber, or polyurethane. Flexibility and hardness of the body are adapted to the intended use. The body has circumferential and longitudinal ribs, forming square recesses that retain an internally threaded anchor. This allows different types of studs to be screwed in. Studs are available in various sizes, shapes, and hardness and are selected on the basis of hardness of the deposit, extent of the buildup, location of the deposit, and the pipe material.

Pin-wheel pigs are used on longer and larger diameter pipelines. They are used as part of a service rather than being sold outright. The pin-wheel pig consists of a number of heavy-duty polyurethane disks that have an outside diameter significantly less than the inside diameter of the pipeline. The pig protrudes radically from the circumferential edge of each disk and a number of steel pins with hardened tips are radiused to prevent damage to the pipe wall. The diameter across any two opposite pins is greater than the inside diameter of the pipeline. Thus, when the pig is traveling through the line, the pins are bent back at a slight angle. This assists in the cleaning action and also compensates for any wear. None of the wax or scale removed from the pipe wall is pushed forward by the pig itself. This is left behind for removal by another type of specialty pig as part of the overall program.

13.2.8.5 Decommissioning

Much discussion is going on about the methods and requirements for abandonment of pipelines. The procedures for abandoning a hydrocarbon pipeline are product removal, cleaning, inspection/testing, and inerting (nitrogen). Some of the authorities having jurisdiction require evidence of the condition of the pipeline might be needed to obtain approval to abandon it. This may involve the use of one or more ILI tools.

13.3 Designing a pipeline for pigging

13.3.1 General considerations

The ideal pipeline for pigging would be one that is perfectly straight from end-to-end, has a constant *ID* with no weld penetrations, is perfectly round, an inside surface that is polished, with no outlets, no valves, or other devices, pumps a light refined oil at a speed of about 3 ft./s (1 m/s). Unfortunately, most, if any, pipelines meet this criterion; so, it is necessary to establish some acceptable tolerances.

13.3.2 Pipeline dimensions

13.3.2.1 Length

The distance between pig traps must be determined for each specific pipeline. Sometimes, the wear of the pigs and pipeline product and compatibility of the pipeline product and the elastomer components determine the distance between pig traps. Wear is usually greater in a gas pipeline than in a crude oil pipeline. An epoxy lined steel pipeline creates less wear than a bare or a concrete lined pipeline.

Most often, the length of the pipeline between pig traps is determined by factors other than pigging, such as the location of the pump or compressor stations. Some common spacings are:

- Natural gas pipelines, pig traps 100 miles (160 km) apart
- Crude oil pipelines, pig traps 200 miles (320 km) apart
- Refined product pipelines, pig traps 150 miles (240 km) apart

When conditions are carefully monitored and controlled, pig traps can be spaced further apart. Examples include:

- Natural gas pipeline system with approximately 500 miles (800 km) between pig traps
- Crude oil pipeline system with approximately 600 miles (960 km) between pig traps

13.3.2.2 Diameter and wall thickness

The design flow rate is used to determine the pipe diameter and wall thickness. The pipe size and distance between pump/compressor station costs must be balanced. Most pipelines are laid with a pipe that has a constant *OD* and with an *ID* that varies as the wall thickness changes. For trouble-free pigging, it is always advisable to specify a constant *ID*. When necessary to increase the wall thickness, material should be added to the *OD*. Even though the codes specify a standard *OD*, suppliers will, depending on the size and quantity, be prepared to provide these nonstandard *ID* sizes, if requested, often at little or no extra cost.

One should make certain the tolerances allowed by the applicable piping codes for *ID* (ovality, weld penetration, etc.) are within the capabilities of a pig to negotiate them.

Eliminate many of the common construction practices that could cause some costly problems in the future.

- Ensure scrap metal, welding rods, etc. are not allowed to enter the pipe, thus avoiding the need for gel pigging
- Minimize mill scale and coarse grit blasting during the specification stage as mill scale can loosen and can be dislodged while blasting can leave an abrasive surface which will wear away the pig's polyurethane seals.

13.3.2.3 Dual diameter pipelines

Pipelines that receive input along their length may need to be smaller near the upstream end and increase in diameter as the flow rate increases. From a pigging standpoint, pig traps should be installed at each change in pipe size. When practical, reducers can be used. A slope of 1:5 (approximately a 22° included angle) or less is desirable. Forged reducers with abrupt transitions are unacceptable. *Concentric reducers* (Figure 13.8) should be used for changes in diameter within a pipeline so that the centerline of the pig can remain on the same plane as it makes the transition from one size to another. *Eccentric reducers* (Figure 13.8) are ideal on pig traps (provided there is no internal tray or basket) as the pig trap barrel is oversize and the centerline of the pig when it is in the trap is almost on the same centerline as the pipe.

Cleaning pigs are available that will travel the dual size when the change is not more than one or two pipe sizes. Special pigs are available for pipelines that change three or more sizes. Most instrument pigs do not have the ability to operate in dual size pipelines but many can operate in pipelines with different wall thicknesses. Special consideration must be made when substantial differences in wall thickness exist in subsea pipelines, such as the risers of subsea pipelines and pipeline.

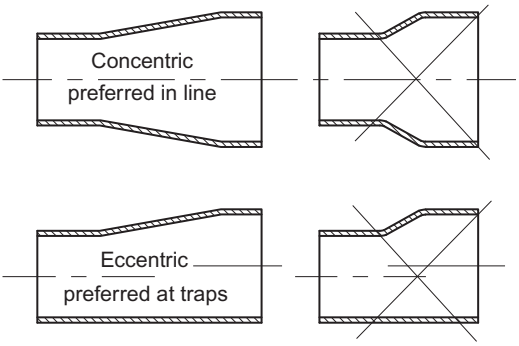

Figure 13.8 Concentric reducer (top); eccentric reducer (bottom).

13.3.3 Pipeline materials

13.3.3.1 Base materials

Most cross-country pipelines are made of carbon steel with yield strengths ranging from 40,000 to 50,000 lbs/in. As pipelines get larger in diameter and pressures increase, higher yield strength steels are used which minimize wall thickness and minimize tons of steel required and subsequently the cost of pipe.

13.3.3.2 Linings

Linings are either installed at the factory or at a site near the pipeline right-of-way. They are commonly used in natural gas pipelines and protect the metal from the corrosive elements contained in the natural gas. Linings are normally cleaned by pigs equipped with elastomer blades. Metal cleaning elements should not be used in internally lined pipelines.

13.3.3.3 Coatings

External coating protects pipelines from corrosion caused by soil and other materials contained in backfill. *Hot tar* is the primary coating used. Various materials are used with the tar to retain it in position while the tar hardens. The coating is usually covered with a paper wrap to protect the tar until it is safely laid in the ditch. *Bitumen* is used as an alternative to tar. It is usually applied over the ditch, after welding but before lowering into the ditch. *Plastic coatings* are also used. On small pipelines, the plastic coating is wrapped with manually operated machines while large pipelines are coated using powered wrapping machines. *Epoxy-based* coatings are applied either at the factory or at a remote site near the pipeline right-of-way.

Pipeline surface preparation and application must be carried out under carefully controlled conditions to ensure maximum pipe protection. Coating failure could cause localized external corrosion. All coatings should be carefully checked for damage or holidays (voids) just before the pipe is laid into the ditch and any defects repaired.

13.3.4 Bends

13.3.4.1 Forged bends

Bends with a relatively short radius must be factory made and are generally forged to a number of standard radii. Radius of a bend is measured to its centerline as shown in Figure 13.9. Forged bends have an increased wall thickness, with the additional material added on the inside diameter. This should be avoided.

Short radius (*D*) bends should not be used in pipelines if pigs are to be run. Long radius (1.5*D*) elbows are only suited for spheres. Pigs can be designed to pass long radius elbows but they are generally less effective than those that require a longer radius bend. For pigging, bends should have a minimum radius as follows:

- 10*D* for pipelines 4 in. and smaller
- 5*D* for pipelines 6-12 in.
- 3*D* for pipelines larger than 12 in.

Ideally, bends should not be installed adjacent to one another. At least three diameters of straight pipe should be installed between any two bends.

13.3.4.2 Field bends

When laying a pipeline, the pipe must be bent to the contour of the land through which it is passing. Bending machines are normally used. The pipe's allowable yield stress dictates the minimum allowable bend radius. When bending the pipe, its allowable yield stress should not be exceeded. When bends are made without a bending machine, the bends may not be of a uniform radius and could result in a series of sharper bends that might not be acceptable for pigging. Bends made without a bending machine are

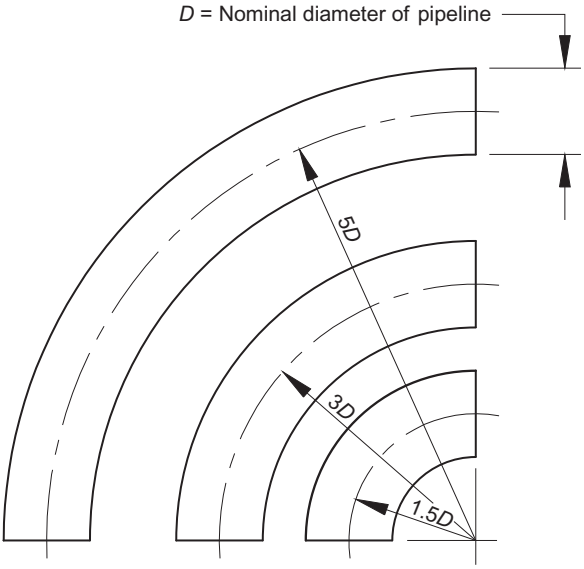

Figure 13.9 Dimensions of common factory bends.

susceptible to ovality, resulting in a reduction in diameter, usually in the place of the bend. This should be avoided. Localized deformation should be limited to no more than 2% of the pipeline diameter.

13.3.4.3 Miter bends

Miter bends are made by cutting the end of the pipe at an angle to achieve a change in direction of the pipe as shown in Figure 13.10. Miter bends should be avoided; however, small angles, not exceeding 3°, may be necessary to achieve proper fit up at a field joint of mating pipes. A bend made of a series of miter joints is unacceptable in all pipelines. If a miter bend exists in a pipeline, the pig supplier must be notified of the dimensions to make sure that a suitable pig is provided.

13.3.5 Off takes

13.3.5.1 Unbarred tees

Most utility pigs will safely traverse tees with outlets up to 70% of the nominal line size. Most ILI tools can pass outlets up to 60% of the nominal line size. Standard industry practice is to install guide bars in all tees with outlets about 50% (Figure 13.11) of the nominal line size. This prevents the pig from getting stuck by "nosing" into the side outlet such as half guides and any other attachment such as cleaning brushes or blades, wheels, sensors, etc. past the obstruction. Tees should not be installed adjacent to one another. At least three diameters of straight pipe should be installed between any two fittings.

Hot tapping is when the off take is made by welding a fitting to the outside of the pipeline and the hole is made by drilling under pressure (hot tapping). Tapping fittings

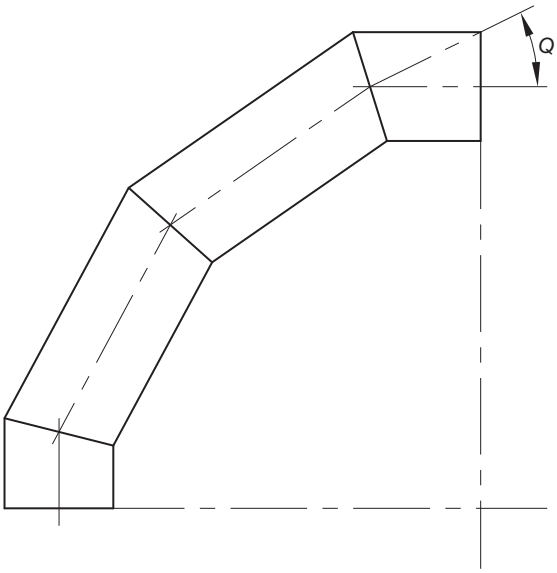

Figure 13.10 Typical miter bend.

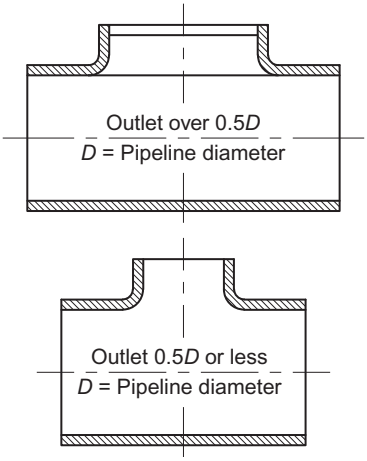

Figure 13.11 Barred tee (top); unbarred tee (bottom).

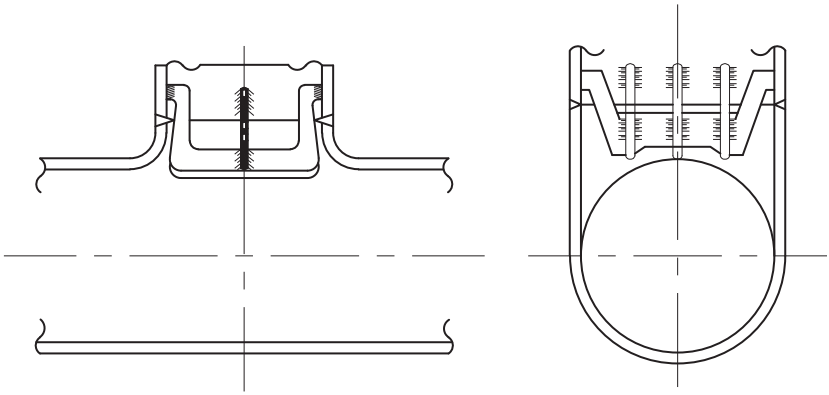

Figure 13.12 Typical method of installing bars in tees.

are available that allow guide bars to be installed in the tapped hole, provided it is at least 6 in. in diameter. Fittings have a special flange designed to lock the mechanism with the guide bars in position using the machine that was used to make the tale (Figure 13.12). Most hot tapping fitting manufacturers make fittings and allow guide bars to be installed across the outlet after the tap has been made.

13.3.5.2 Barred tee's

Bars should be structurally sound with full penetration welds. The bars may be subjected to severe shock loads by pig brushes, etc. Bars may cause the pig to jam if they become broken and protrude into the pipeline. The bars should be installed parallel to the axis of the run (i.e., line to be pigged) and spaced.

- 2 in. (50 mm) apart for the smallest off take (e.g., 8″ × 30″ tees)
- 4 in. (100 mm) apart for the largest sizes (e.g., 30″ × 30″ tees)

When the outlets are more than 12 in. in diameter, it is advisable to fit a reinforcing bar, or bars, above and at right angles to the guide bars as shown in Figure 13.13.

A sphere, with a single seal, will not pass some offsets that a pig, with multiple seals, would pass. A sphere allows the driving fluid to bypass at the off take and the sphere may stop at that point. If there is any possibility that spheres may be used, then a special "flow tee" must be installed. These are proprietary designs, but all are similar to that shown in Figure 13.14. They prevent the sphere from either entering the side outlet or remaining in the tee while the flow bypasses. The longitudinal dimension of the slots must not exceed one third of the diameter, and preferably less. Unless the outlet is installed in the "vertically down" position, sphere tees allow liquids and debris to remain in the annulus, causing potential corrosion problems.

Laterals are off takes (outlets or inlets) that intersect the pipeline at any angle other than 90° to the pipeline as shown in Figure 13.15. In order for a pig to pass through the lateral, it is essential that the span of the seals on the pig be greater than the length of this opening.

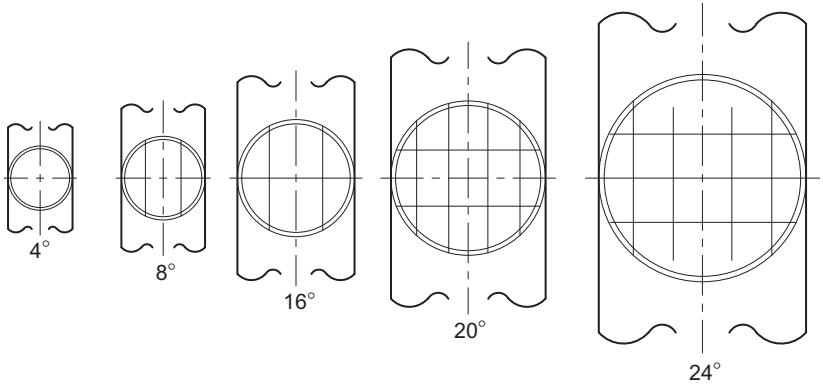

Figure 13.13 Typical arrangement of bars in tees of different branch sizes.

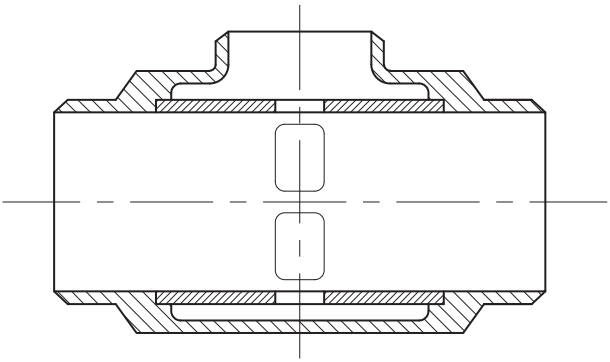

Figure 13.14 Proprietary sphere or flow tee.

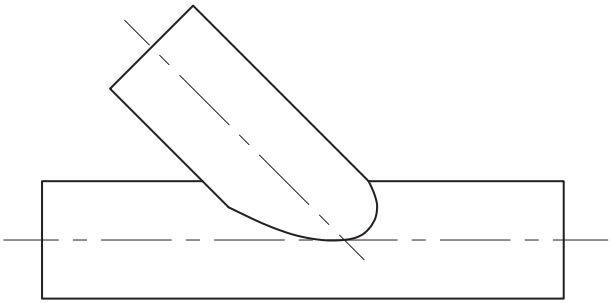

Figure 13.15 Lateral.

WYE junctions are a means of allowing pigs to be run in different pipelines and converge both the flow and the pigs into a single pipeline. Pigs can only traverse WYEs in one direction: from the laterals into the main line. Any possible advantage of utilizing the bidirectional capability of a particular type of pig in these lines is partially or totally negated.

13.3.6 Valves

13.3.6.1 In-line block valves

Valves are the biggest single cause of pigging problems. Full bore valves are essential and these are commonly solid-bored (not-hollow-ball) ball valves (Figures 13.16 and 13.17). If gate valves must be used, they should be the through-conduit type (see Figure 13.18) so that no voids, seat rings, or other features are present that might affect the smooth passage of a pig. The inlet and outlet bores must also be concentric.

Each valve should be carefully checked to ensure the stops are correctly set, particularly if the valves are fitted with actuators. Even when procedures have been

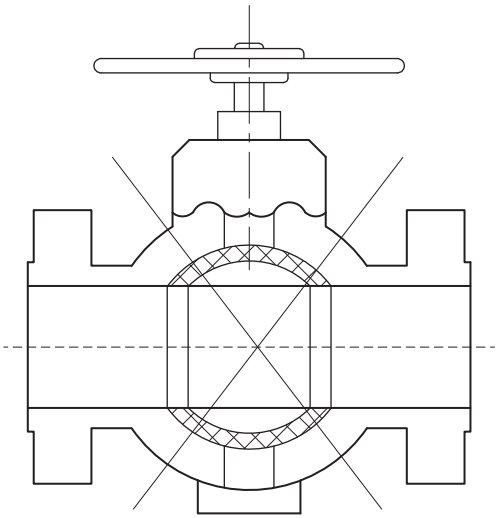

Figure 13.16 Hollow ball valve.

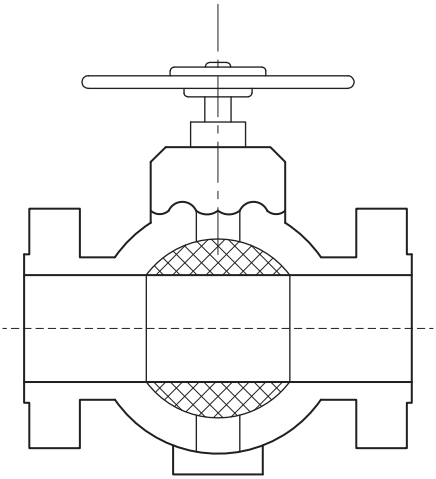

Figure 13.17 Solid ball valve.

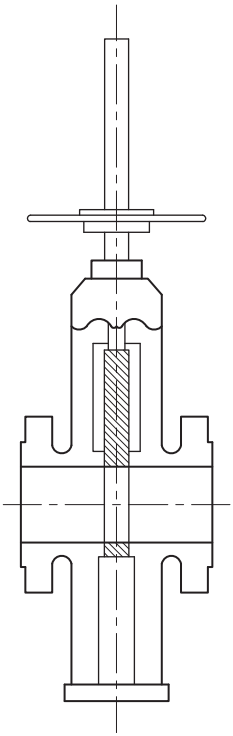

Figure 13.18 Through conduit gate valve.

followed, if a pig is launched when the main line valves are not in fact fully open, or if the ball has gone slightly beyond the fully open position, it can cause serious and costly damage to both the pig and the valve or result in a shutdown. Butterfly valves and most plug type valves cannot be used in a pipeline to be pigged. Instrument pigs are more limited in the pipeline design generally, including the valves.

13.3.6.2 Check valves

The bowl should be shallow with a gradual transition back to the line diameter. The face of the clapper must not have any features that could catch or damage the pig or its attachments (e.g., brushes, sensors, wheels, etc.). The valve should have a means for locking the clapper in the open position during inspection pigging or, if possible, the valve should be installed in bypass pipe work so as to eliminate the need for pigging through it. Sometimes, it is necessary to equip the pig with specially designed bumpers at the front and/or at the mid-point to push the clapper open and hold it there during pig passage (Figure 13.19). Spheres are not suited for dependable passage through check valves as they tend to sit in the bowl and are held there by the weight of the clapper (Figure 13.20).

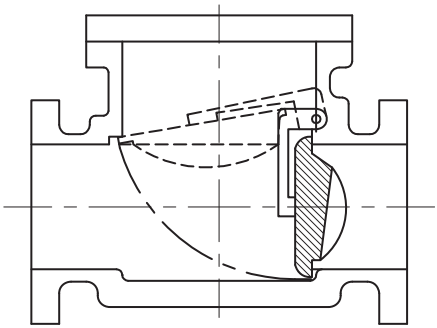

Figure 13.19 Check valve for pigging.

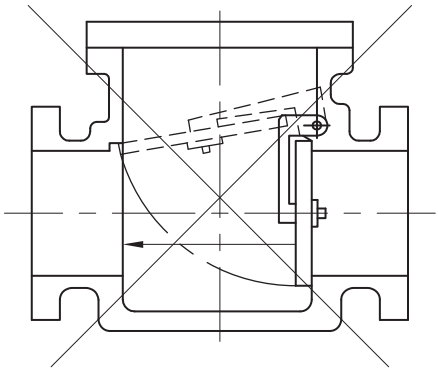

Figure 13.20 Valve unsuitable for pigging.

13.3.7 Relative position of pipeline components

Sometimes, a pipeline is designed with all the individual components suitable for pigging, but in such a way that the completed assembly becomes unsuitable. Figure 13.21 illustrates two tees' places in a pipeline so that their outlets are the same distance apart as the seals on a pig. The result is the pig stalls and the fluid bypasses the seals.

The same situation can occur with:

- Tee and a bend
- Tee and a check valve
- Many other combinations

Some pigs also have difficulty in passing two bends welded back-to-back. To avoid these potential problems and to take account of possible future developments in instrument pigs, it is recommended that a minimum straight length of pipe, equivalent to three pipe diameters, be installed between any two components.

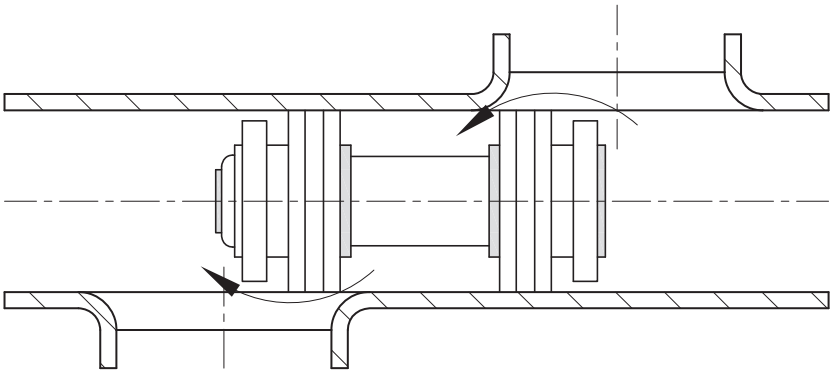

Figure 13.21 Pig stalling between two tees.

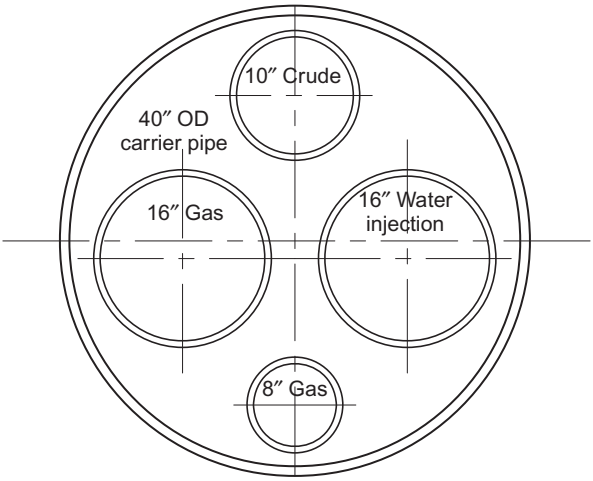

Figure 13.22 Typical arrangement of subsea pipe bundle.

13.3.8 Bundles

Bundles are an extension of the practice of tying together umbilicals or electrical cables and running them as a single line. Pipe bundles are considerably larger and more complex. In offshore applications, pipe bundles offer major cost advantages over laying pipelines individually. A bundle might include the following (Figure 13.22):

- 16 in. water injection line
- 18 in. gas line
- 12 in. oil export line
- 6 in. gas lift line

All of these would be contained within a 42 in. carrier pipe and held in their correct relative position by spacers.

Maintenance is an even bigger problem. If one pipe in the bundle leaks, it will be very difficult to locate and repair it. This situation would probably lead to a shutdown so it would be wise to limit the pipes in any one bundle to those serving a common field process.

13.4 Pig traps and pigging stations

13.4.1 Basic configuration

Pig traps are used to insert pigs into a pipeline then launch, receive, and remove them. Not uncommon during construction, and sometimes for maintenance and inspection operations, temporary traps and pig catchers may be installed. These could be a simple pipe spool piece with branch connections or vents fabricated on-site or a complex

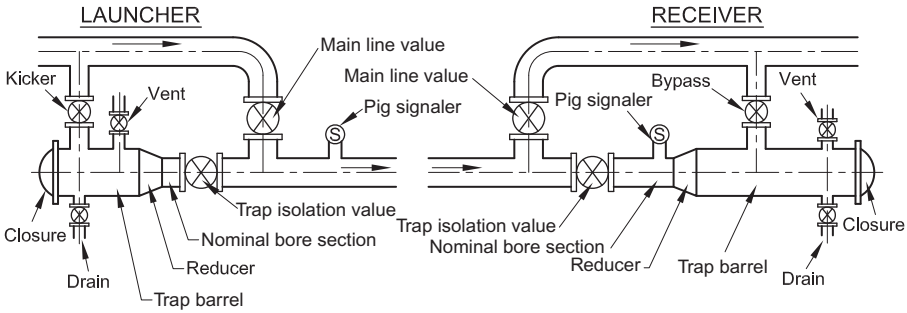

Figure 13.23 Basic configuration and terminology for pig launcher and receiver.

portable unit such as a lay-down head that may be designed to launch multiple pigs from a subsea location.

The main body (barrel) of the pig trap consists of a section of pipe that is larger than the nominal diameter of the pipeline. The barrel houses the pig and allows the pig to be inserted or removed more easily. Typical sizes range as follows:

- 10 in and below, the barrel should be 2 in. over size of pipe
- 12-26 in, the barrel should be 4 in. over size of pipe
- 28 in. and above, the barrel should be 6 in. over size of pipe

A quick opening closure is attached to one end of the barrel and a reducer followed by a section of pipe having the same inside diameter as the pipeline (referred to as the "Nominal Bore Diameter") is attached to the other end. Permanent installations for operational purposes tend to have a more or less standard layout. Figure 13.23 shows the basic concept as well as the main components and the terminology generally used to describe them.

13.4.2 Launching trap design and dimensions

13.4.2.1 Nominal bore section length

The length only needs to be long enough to prevent the nose of the pig touching the valve ball or gate of the trap isolation valve. Generally, a length of 1.5*D* is adequate.

"Rules of thumb" for launcher barrel length

Utility pigs

- 1.5 times the length of the longest pig, or
- 2.5*D*, assuming single module pigs

ILI tools

- Many tools, especially those for detecting metal loss or corrosion, are made of several modules joined together with universal joints. The launcher barrel should be at least 1*D* longer than the overall length of the pig (refer to Figure 13.24). Except for the length, all other dimensions will be the same as for utility pigs.

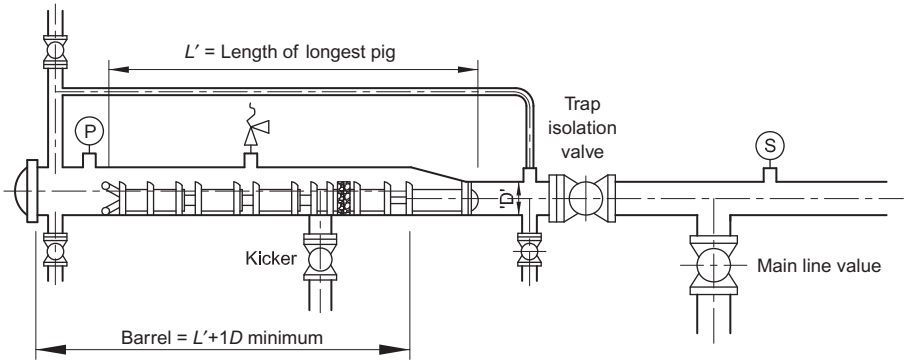

Figure 13.24 Launcher for in line inspection (ILI) tools.

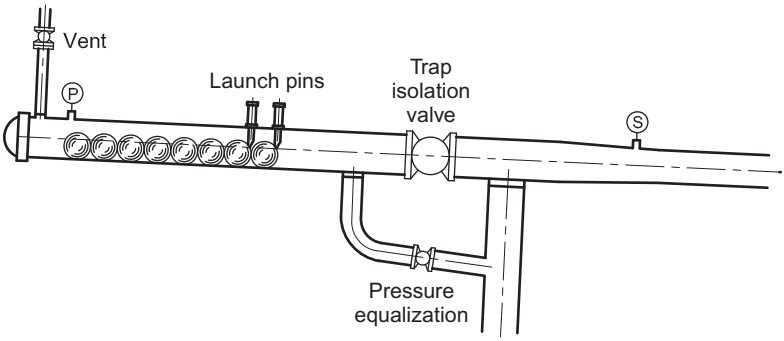

Figure 13.25 Typical sphere launcher.

Spheres

- Spheres have a single line seal and thus must be treated differently than pigs, which will have at least two and often four or more seals per pig (refer to Figure 13.25). The sphere launcher has a specially designed launch valve with a sphere pin. A pneumatically operated flap inserted in the trap body releases spheres individually into the neck of the trap for launching.

13.4.3 Receiving trap design and dimensions

13.4.3.1 Nominal bore section length

When receiving, there is a risk of the pig loosing its drive as soon as the front seal enters the reducer. If this occurs, the rear of the pig must be clear of the valve to ensure that it can be closed. The bore length should be long enough to contain a pig. For Utility pigs, a minimum of 2*D* is recommended. For ILI tools, a minimum of 1*D* longer than the longest tool is recommended.

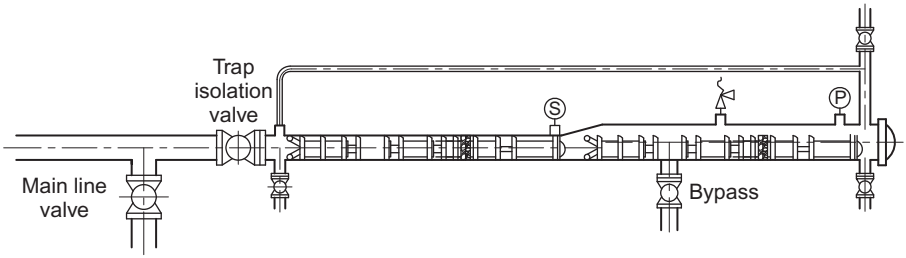

Figure 13.26 Receiver for ILI tools.

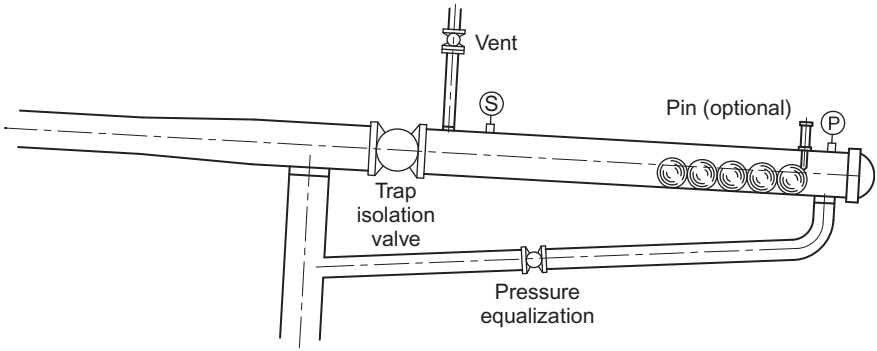

Figure 13.27 Typical sphere receiver.

"Rules of thumb" for receiver barrel length

Utility pigs

- 2.5 × length of the longest pig (allows two pigs to be received together should a problem occur, which requires a chaser pig to be used. Also allows space for the pig to decelerate under normal conditions)
- 4.5*D*, assuming single module pigs

ILI pigs

- 2.5 × length of longest pig (Figure 13.26) (allows for deceleration)

Spheres

- Design of sphere receiver is similar to that described earlier for sphere launchers. They are usually installed at an angle of about 5°, but are declined such that the closure is lower than the pipeline as shown in Figure 13.27.
- A release pin is fitted in barrel that provides controlled unloading of spheres.

13.4.4 Pig trap closures

13.4.4.1 Safety

The biggest single cause of incidents during pigging is the improper operation of the closure. Closures are subject to very stringent code requirements. It is essential that

the closure is fitted with a pressure safety device that prevents opening of the closure door when the pig trap is pressurized or the design prevents pressurizing the pig trap if the closure is not closed and is in its current position.

13.4.4.2 Operational considerations

When closing the closure, the safety device prevents the closure from being locked until it is completely and correctly closed, thus preventing the trap from being pressurized. Closures usually use o-rings as the sealing means. It is important to make certain the sealing surfaces are not damaged during operations by keeping them clean and taking extra care when inserting or removing the pigs. Hinges are usually exposed to the atmosphere and should be protected to prevent corrosion.

13.4.5 Pigging station piping layout (Figure 13.28)

13.4.5.1 Kicker and bypass lines

The "kicker" line is required to launch a pig into the pipeline. It allows flow from the pipeline into the barrel of a tap at a point that is behind the pig. This moves the pig into the nominal bore section of the trap, out through the trap isolation valve and onto the pipeline. The "bypass" line is similar to the kicker line in that it provides a path for positive flow through the trap when a pig is to be received. Pipeline flow continues to drive the pig out of the nominal bore section of the trap and into the over sized barrel where the pig's differential pressure seal is broken which brings it to a stop.

Many traps have a small equalizing line and a valve around the kicker and bypass line valves. The equalizing line is used as an alternative for filling the trap without the potential for damage to the seats of the main kicker or bypass valves. On the

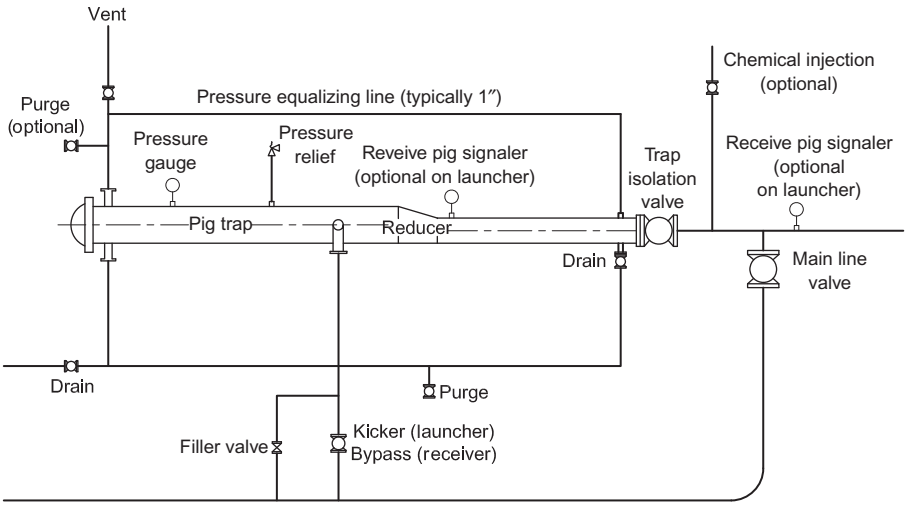

Figure 13.28 Typical flow diagram for launching and receiving traps.

launcher, the distance between the kicker and the reducer should be at least $2D$. On the receiver, the distance between the bypass and the reducer should be the minimum possible.

13.4.5.2 Drain points

Drains are required at the lowest point of all traps, whether launchers or receivers. Industry practice is to install two drain connections: one in front and one behind the point where the pig may be lying in the trap. This configuration will minimize spillage and will assure the drain is not blocked by a seal on the pig.

13.4.5.3 Vents or blowdown points

Vents should be placed at the highest point of the pig trap. This allows the release of nonproduct as the trap is being filled. Vents verify that the trap is completely filled; but in this event, care must be exercised to avoid spillage or danger to personnel. The vent can be connected to the flare or vent disposal system; however, a valve should be provided so that the operator can verify the status of the filling procedure.

13.4.5.4 Pig signalers

It is important that the position of a pig be known when it is being launched or received. This is usually done with a signaling device mounted on the pipeline. On the launcher end of the pipeline, the signaler is mounted downstream of the tee where the main stream joins the pipeline. The signaler verifies that the pig has left the launching trap and verifies that the pig has passed the tees and other downstream connections and is in the pipeline.

On the receiver end of the pipeline, the signaler is mounted downstream of the trap isolation valve, a distance equal to or greater than the length of the pig being run. This verifies that the pig is completely within the trap and that the trap isolation valve can be closed without risk of damaging the pig.

There are two types of signalers: intrusive and nonintrusive. The intrusive "trigger" signalers protrude into the pipeline and make physical contact with the pig. This is the most commonly used signaler at larger pig launching and receiving stations. Plunger type operates regardless of the direction in which the pig is traveling, i.e., bidirectional. Leaver-type may be either unidirectional or bidirectional (preferred). Intrusive signalers need regular servicing and this may require that they be removed from the pipeline.

Nonintrusive signalers are those that are triggered by some other method, such as a change in the magnetic field.

13.4.5.5 Pressure balance

It is important that the trap be filled slowly. The pressure within the trap must be equalized with the pipeline pressure before the trap isolation valve is opened. The trap isolation valve must never be used for filling the trap. The kicker or bypass valve may be

used for filling, but this could result in damaging the seats. A small bypass line around these valves is preferred for filling.

When filling the trap, it is necessary to fill both in front and behind the pig and this requires a vent in both of these areas. Some traps have piping fitted between one end of the trap and the other to keep the pressure equalized both in front and behind the pig while it is in the trap. It is important that this piping does not have a valve that could be closed, which could prevent pressure equalization within the pig trap. If there is a valve, it must be "locked open" or "car sealed open." Once the trap has been filled and vented and the pressure is equalized with the pipeline pressure, the launching or receiving procedure can begin.

13.4.5.6 Optional connections

13.4.5.6.1 Purge connection

The trap may need purging because it is located in a confined area or the nature of the product is hazardous where even a small amount of vapor could create a hazard. Whatever the reason, permanent purge piping may be connected to the trap for this reason.

13.4.5.6.2 Injection point connection

Sometimes, it is desirable to run two pigs with a product other than the pipeline product between them. If the trap is equipped so that multiple pigs can be loaded and then launched one at a time, injection piping can allow the product to be injected without requiring the trap to be opened and additional pigs installed.

13.4.5.6.3 Valve bypass connection

When a small flow is required and a valve is opened across against a large differential pressure, a throttling valve with hard seats is required. Unfortunately, most pipeline valves contain soft seats and thus are not suited for throttling without experiencing damage. Therefore, piping with a bypass valve is normally provided to allow the flow and pressure to equalize.

13.4.5.6.4 Instrumentation connections

Most pipeline functions and conditions are measured in the field and controlled at a remote location. Instrument connections located on the trap must be designed and located such that they cannot be damaged by any of the pigging or other activities.

13.4.6 Automatic pig launching and receiving

13.4.6.1 General considerations

When a pipeline is required to be pigged frequently, the time and expense of launching and receiving individual pigs become quite expensive. Thus, an automatic pig launching and receiving system was developed to handle multiple pigs. By installing the launching and receiving traps at a slight angle to the horizontal (5°), several

spheres or more can be loaded into the launching trap and can be launched into the pipeline by releasing them one at a time.

13.4.6.2 "Two-pin" method

The most common method of releasing spheres individually is to install two pins spaced one sphere diameter apart at the pipeline end of the launching trap as shown in Figure 13.29.

13.4.6.3 Handling area

Space must be provided around the trap area to allow operation of hinged closure, allow pigs to be installed in or removed from the trap, and allow containment of any fluids that may drip from the pigs that have been removed. The handling area around the trap must be treated the same as any other work area and escape routes must be available in case of an emergency.

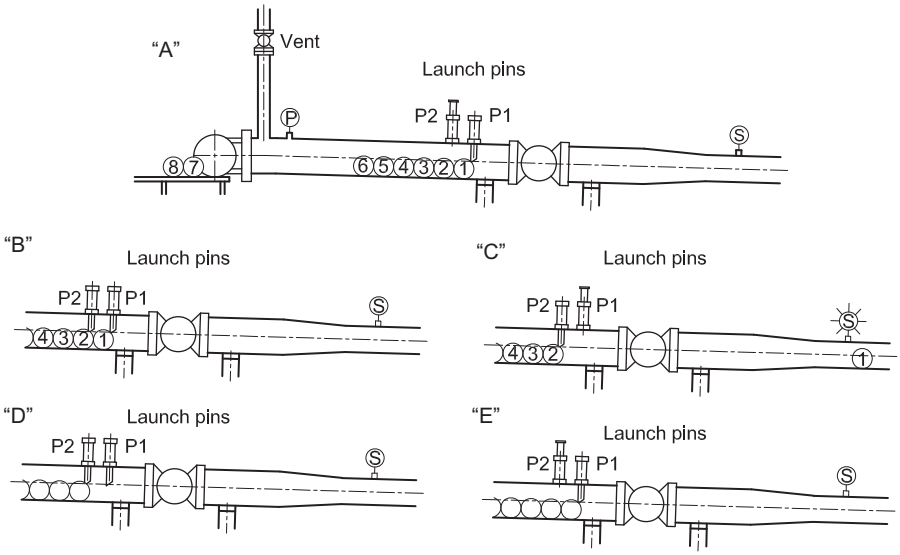

Step	Activity	Pin "P1"	Pin "P2"
"A"	Lading	Extended	Retracted
"B"	Ready to launch	Extended	Extended
"C"	Lounch	Retracted	Extended
"D"	Re-setting	Extended	Extended
"E"	Repeat cycle	Extended	Retracted

Figure 13.29 Typical sphere launch pin sequence.

13.4.6.4 Lifting equipment

A pig station should be equipped with suitable handling facilities. These facilities include cranes to lift or lower the pig into position onto a purpose built cradle and a ram (usually hydraulic) to push the pig in or to pull out. Special consideration must be given to the need to handle ILI tools, as this will affect both the configuration and weight requirements for the handling system. Pigs greater than 12 in. are too heavy for handling manually and handling equipment will be needed. Access must be provided to the trap area for a vehicle to deliver or pick up the pigs. When piping must be crossed for access to the trap, stairs and platforms should be provided for safe crossing.

13.4.7 Offshore considerations

13.4.7.1 General considerations

Pig stations installed on offshore platforms should conform to most of the same dimensions and conditions as those used for onshore installations. However, some changes will be necessary due to the confined space on an offshore platform.

13.4.7.2 Space saving measures

Pig trap-hinged closures should face out to the sea, if possible, as these eliminate the need to provide a handling space within the confines of the platform. These allow loading and unloading ILI tools and larger pigs easier, provided a suitable temporary structure is in place. Mount traps in a vertical position make handling of pigs and spheres more difficult. It complicates running MFL ILI tools.

Vertical pig launchers provide a practical solution to space saving at both launching and receiving stations (Figures 13.30 and 13.31). Vertical pig launchers are used to dispatch pigs individually using a ladder system with an internal guide. Spheres are normally released individually through a lower flap mechanism only. Most pig stations are launchers with the receiver being at some onshore location. This allows the debris and dirty pig to be handled onshore. If a pig receiver is located on the platform, the same provisions must be provided as for onshore applications.

13.4.8 Effects of operating conditions

13.4.8.1 Product

The product affects the type of cleaning devices that should be used on a cleaning pig. The product determines the materials that must be used for the pig seals or other pig parts. The product affects the decision to reuse a pig. For example, foam pigs absorb the product and are impossible to clean.

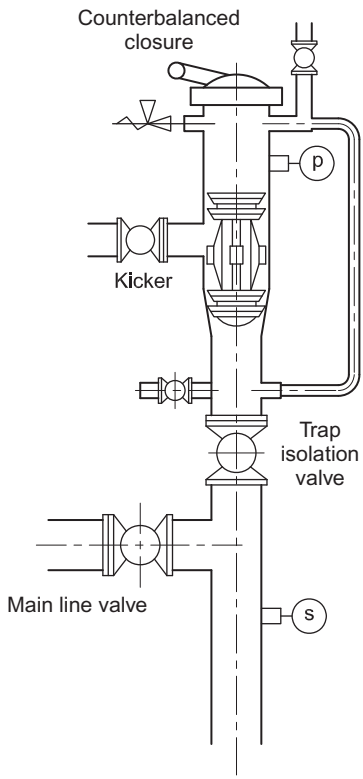

Figure 13.30 Vertical pig launcher.

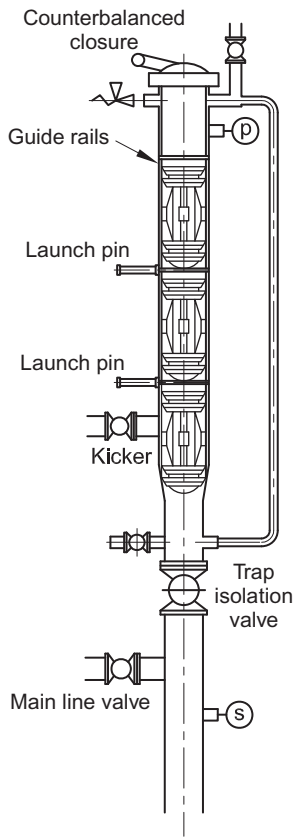

Figure 13.31 Vertical multiple pig launcher (may also be designed for ILI tools).

13.4.8.2 Temperature

The maximum allowable operating temperature for a pipeline pig depends on its materials of construction. Utility pigs are usually limited by the polyurethane or other elastomer seals which have an upper temperature limit of 140 °F (60 °C). Polyurethane is susceptible to hot water. The electronics limit the temperature for ILI pigs to an upper limit of 105 °F (40 °C). Whenever consideration is being given to pipeline pigging, any temperature above ambient conditions should be made known to the supplier as early as possible.

13.4.8.3 Pressure

Most utility pigs are molded or fabricated from materials considered as solids and thus are not affected by pressure. Most foam pigs are open cell and are not affected by pressure. Inflatable sphere should be full of liquid and so are also unaffected. ILI tools have their instrumentation housed in sealed pressure-tight containers, and thus have

very strict limitations with respect to allowable external pressure. One should make certain the ILI tool used has a rated MAWP that exceeds the maximum pressure of the pipeline.

Speed excursions occur when pigging low-pressure gas pipelines. Pigs "hold-up" at a weld bead or other obstruction until the gas pressure builds up behind it sufficiently to overcome the obstacle. The pig then accelerates away, often attaining speeds well over 60 mph before coming to rest once more and repeating this cycle. This results in negligible pigging efficiency and is very dangerous. Pigs have been known to rip open and exit a pipe on a bend when traveling under these conditions. A common approach to this problem is to pressurize the whole pipeline and run the pig by venting at the downstream end while maintaining a certain minimum pressure in front of the pig to act as a buffer.

A guide to the differential pressure required to drive various types of pigs is shown in Figure 13.32. In practice, these values will vary widely. This chart is only intended to provide a rough guide.

13.4.8.4 Pig speed

The most important factor concerning speed is its effect on the sealing efficiency of a pig. Creating and maintaining a good seal effect the:

- Separation of dissimilar fluids (batching) in product pipelines
- Condensate removal in gas lines
- Commissioning

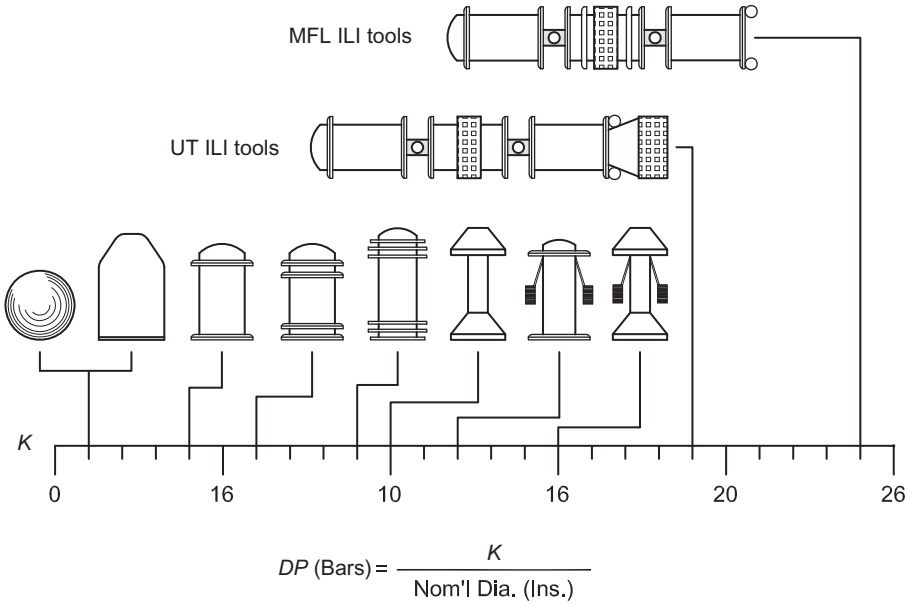

Figure 13.32 Typical pressure drop required to drive a pig.

- Provision of secondary barriers for pipeline isolation
- Film thickness left behind the pig when applying in situ coatings or when performing batch inhibition

Manufacturers specify the speeds at which their pigs must be run to obtain optimum performance. For ILI tools, the range is between 1 and 10 mph (0.5-4 m/s), although many geometry pigs perform at a much higher velocity. On the other hand, utility pigs must be run at whatever velocity the pipeline is operating. Recommended speeds for routine, conventional, and on stream pigging are:

Liquid lines	2-10 mph (1-5 m/s)
Gas lines	5-15 mph (2-7 m/s)
New construction	1-5 mph (0.5-3 m/s)

If gas is dry, speeds in the 12-15 mph are likely to cause frictional heating and consequent breakdown of the polyurethane components.

13.5 Pig types and uses

13.5.1 General considerations

Pigs are classified into two major categories: Utility and Intelligent. Utility pigs are further broken into subcategories of Cleaning and Sealing. Cleaning pigs are commonly referred to as "scrapers" and are used to remove accumulated solids or debris. The type of cleaning pig to use depends upon the nature of the material which needs to be removed. Sealing pigs are commonly referred to as "batching" or "swabbing" pigs. They are used to:

- Remove condensate/liquid from gas lines
- Separate dissimilar fluids in multiproduct lines
- Line filling prior to pressure testing
- Dewatering after pressure testing
- Commissioning (separating slugs of methanol, nitrogen, etc.)
- In situ internal coating product removal prior to shut down

13.5.2 Utility pigs

13.5.2.1 General considerations

A brief description of the major forms of utility pigs follows. Figure 13.33 shows examples of utility pigs: mandrel pig, foam pig, solid-cast pig, and sphere.

Mandrel pigs are assembled from a number of component parts and for which spare parts are available. They are available in most line sizes.

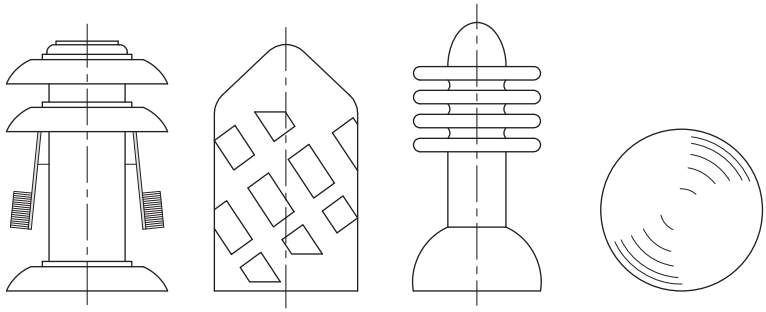

Figure 13.33 Examples of utility pigs (left to right): mandrel pig, foam pig, solid-cast pig, sphere pig.

Foam pigs are molded from polyurethane foam with various configurations of solid polyurethane strips and/or wire bristles, studs, etc. permanently bonded to them. They are available in most line sizes.
Solid-cast pigs are molded in one piece usually from polyurethane. They are normally only available in smaller sizes.
Spheres are normally filled with water/glycol. These pigs can be inflated to the optimum diameter.

Standard pigs can only travel the pipeline in one direction. "Bi-di" *pigs* are capable of traveling in either direction. "Multi-diameter" pigs can travel a pipeline that has more than one nominal diameter, normally only one or two line sizes different.

13.5.2.2 Cleaning pigs

13.5.2.2.1 Mandrel pigs

Mandrel pigs are made up of a number of component parts that are mounted on a body tube so that they may be replaced or reconfigured as the need arises. The main components include the pig body, seals (driving cups) that may be either cup shaped or disks to provide the drive and cleaning elements which provide the means to scrape or wipe the pipe wall. The pig body is usually made of steel but sometimes manufactured entirely of polyurethane or some other tougher plastic material. The seals (driving cups) are normally made of polyurethane. The cleaning elements are made of a material and configuration that is determined by the nature of the deposit. For hard deposits, wire brushes and steel scraper blades are used. For soft deposits (waxes, sludge, etc.), elastomer "plough" blades are used. With careful design, a relatively small number of standard components can be assembled in different ways in order to build pigs suitable for different types of pipelines.

Mandrel pigs can be configured in many different ways depending on the number of seals, overall length, seal spacing, and type and spacing of the cleaning elements. Pipeline conditions determine the variations required. The radius of the pipeline bends determines the overall length and location of the seals and cleaning elements. The shorter the radius of the bend, the shorter the pig must be in order to traverse the bend. There can only be one row of cleaning elements and seals must be placed at each end.

Mandrel pigs 6 in. and above, as shown in Figure 13.34, use spring-mounted cleaning elements that keep the cleaning element in contact with the pipe wall as the element wears. Mandrel pigs less than 7 in., as shown in Figure 13.35, use wheel type cleaning elements and thus do not have a means for wear compensation. To obtain complete coverage of the inside pipe wall, as shown in Figure 13.36, cleaning elements are shaped and mounted so that some parts of the cleaning element will overlap to give cleaning contact for the entire circumstance. Pigs traversing a check valve should have seals on each end and two rows of cleaning elements between the seats as shown in Figures 13.37 and 13.38. When a pipeline contains side

Figure 13.34 Large mandrel cleaning pig equipped with brushes.

Figure 13.35 Small mandrel cleaning pig equipped with wheel brushes.

Figure 13.36 Cleaning pig with overlapping cleaning elements.

Figure 13.37 Cleaning pig with seals on both ends used when check valves are installed in a pipeline.

Figure 13.38 Cleaning pig with two rows of cleaning elements (brushes) between the seats used when check valves are installed in a pipeline.

outlets, the pig must have its seals spaced such that they will span the opening of the outlet. This means that sometimes a pig must be short to traverse the bends in the pipeline and sometimes the pig also needs to be long to span a side outlet, a check valve, or some other type of noncontinuous pipe wall. The situation is resolved by using two short pigs coupled together with a universal joint or other flexible body as shown in Figure 13.39.

Figure 13.39 Cleaning pig with universal joint joining two short pigs together.

Heavy duty disks are machined to the line *ID*, typically used for "Bi-di" pigs as shown in Figure 13.40. Figure 13.41 shows a typical "bypass" through small diameter mandrel pig. The "bypass" is essential for an efficient cleaning operation. It utilizes the differential pressure across the pig to cause fluid flow from back to the front that keeps the solids which the pig removes in suspension.

13.5.2.2.2 Foam pigs

Foam pigs are made of open cell polyurethane foam which does not compress when it is subjected to pipeline pressure. The density of the foam ranges from around 2 lbs/ft.^{3} (32 kg/m^3) to 8 lbs/ft.^{3} (128 kg/m^3) depending on purpose. Figure 13.42 lists the various types of foam pigs. The higher the density, the greater the wear life and performance. Foam pigs are widely used in rehabilitation work. They are also useful when developing a pigging program for a line which has not been pigged and which may contain unexpected problems. The advantages of using plastic materials are:

- Low cost
- Zero maintenance
- Reduced risk of "sticking"
- Offer high tear and wear resistance

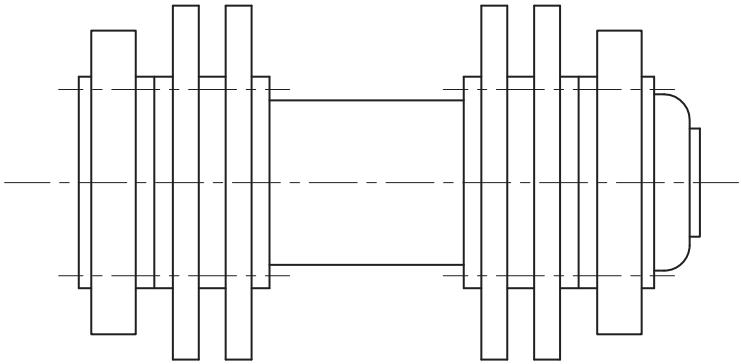

Figure 13.40 Typical "bi-di" pig with heavy duty disks front and rear.

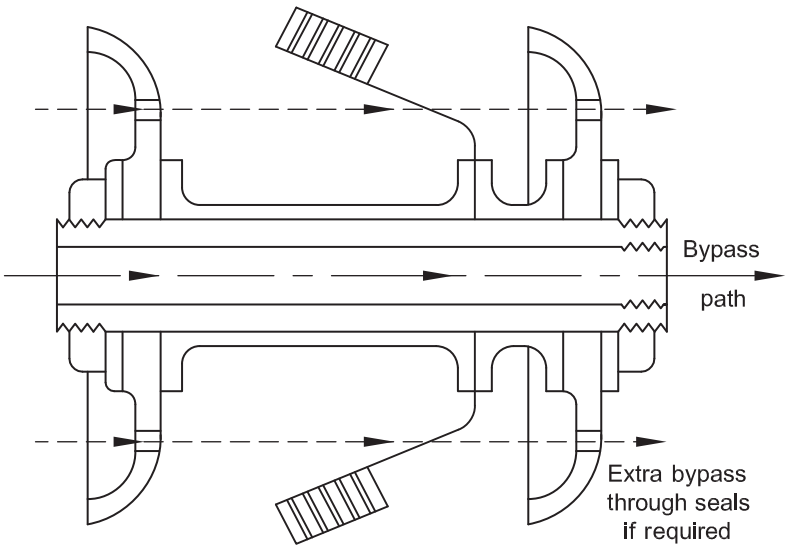

Figure 13.41 Typical "bypass" through small diameter mandrel pig.

13.5.2.2.3 Solid-cast pigs

Solid-cast pigs are usually made of polyurethane and are made as sealing pigs (refer to Figure 13.43). Solid-cast pigs resulted from the fact that the labor cost of assembling and replacing parts on small pigs is very expensive. For example, a 2-in. diameter pig may take as long to assemble as an 8-in. diameter pig. The point at which it is cheaper to replace the whole pig rather than a single component is around 12 in. The cost to transport pigs back to the launching point is another factor that justifies the use of solid-cast pigs. Solid-cast pigs may be molded with integral disks. Cleaning elements

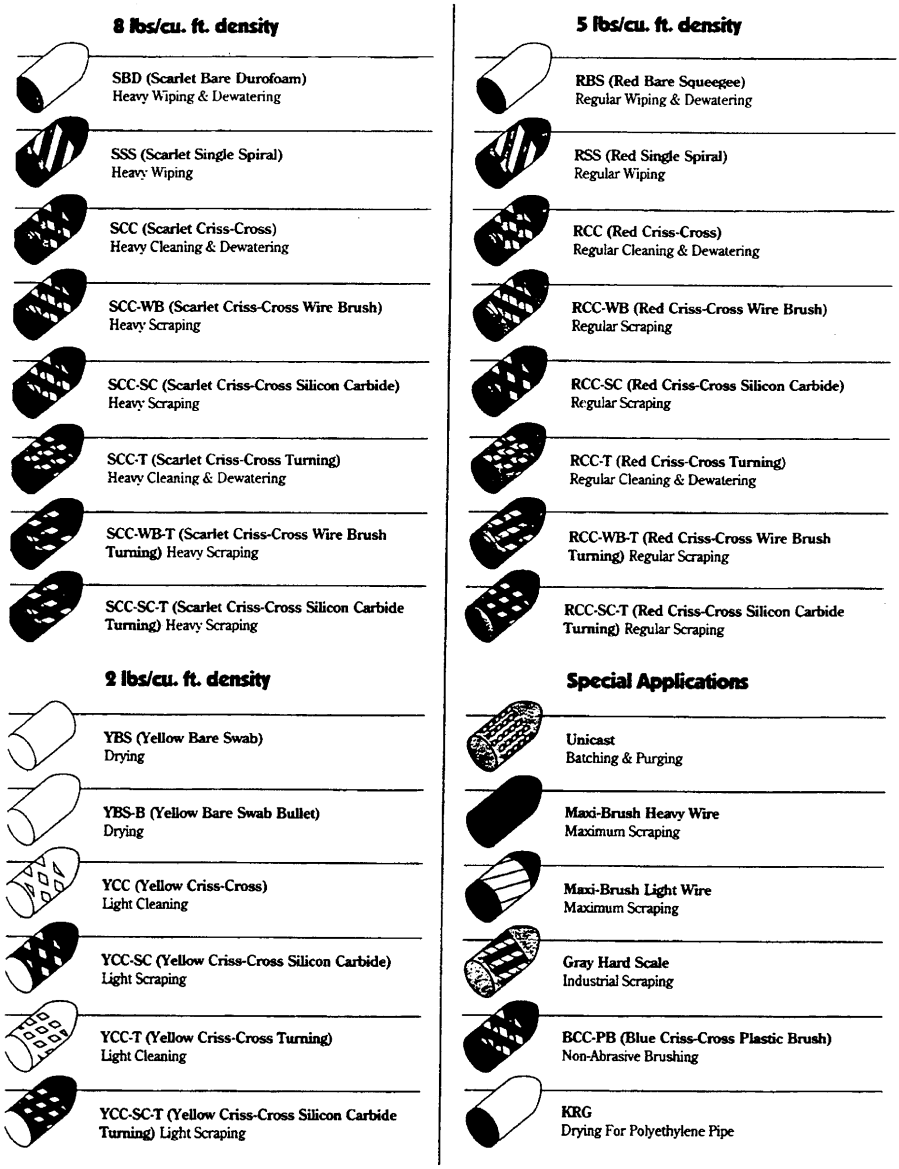

Figure 13.42 Various types of foam pigs.

can also be supplied to attach to some solid pigs to provide a disposable cleaning pig. Figure 13.44 shows typical cleaning elements for solid-cast pigs. Some suppliers offer what appear to be solid-cast pigs since almost all of the components are made of cast polyurethane (see Figure 13.45).

Figure 13.43 Typical one piece cast pigs.

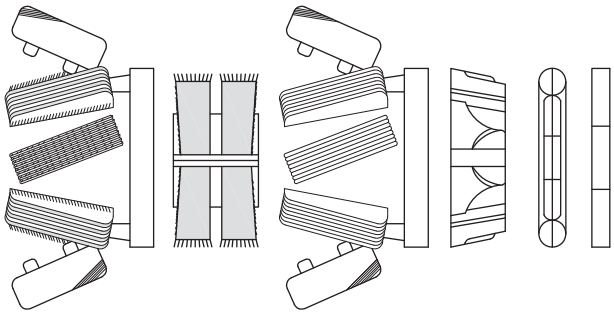

Figure 13.44 Typical cleaning elements for solid-cast pigs.

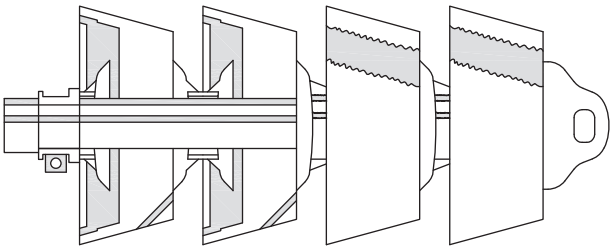

Figure 13.45 Polyurethane pig with polyurethane seal spacers.

13.5.2.2.4 Spheres

Spheres are almost always used as "sealing pigs." A limited number are used for removing solids. They can negotiate "zero-radius bends" and roll freely. This means that they can travel along a lateral line, drop through a tee into a larger-diameter line, and can be pushed into the trap by another pig sized to suit the main line. Their versatility will help solve the problems of pigging pipelines with complex configurations such as gas-gathering systems.

13.5.2.3 Sealing pigs

13.5.2.3.1 General considerations

As with cleaning pigs, the final configuration will depend upon its purpose. Typical applications include:

- Removal of condensate/liquids from gas lines
- Separation of dissimilar fluids in multiproduct lines
- Line filling prior to pressure testing
- Dewatering after pressure testing
- Commissioning
- In situ lining/coating
- Product removal prior to shutdown

Sealing pigs fall in the same category as cleaning pigs.

13.5.2.3.2 Mandrel pigs

Mandrel pigs are often made up of the same parts as used for cleaning pigs, but without the cleaning elements. The most important aspect is the design of the driving cups (seals). A sealing pig has multiple seals, ranging from two to six, and sometimes more. Seals fall roughly into three types (Figure 13.46):

- "Cup seal"—earliest and was derived from the hydraulic piston seals (Figures 13.47 and 13.48)
- "Conical seal"—originated in the early ILI tools (Figure 13.49)
- "Disk seal"—originated with the Bidirectional pig (Figure 13.50)

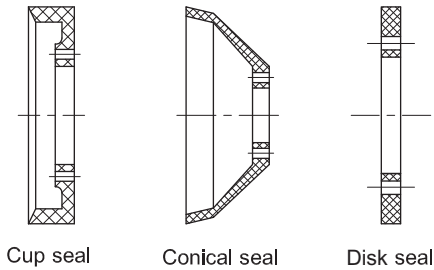

Figure 13.46 Typical pig seals.

Figure 13.47 Typical cup seal.

Figure 13.48 Typical heavy duty cup seal.

Figure 13.49 Typical conical seal.

Figure 13.50 Typical disk seal.

The basic requirement for any seal is that it must maintain close contact with the pipe wall. Close contact with the pipe wall creates wear which eventually reduces the sealing efficiency. Differential pressure is used to expand the seal into contact with the pipe wall. If the radial force created by the differential pressure is greater than necessary, then excessive wear will result. The polyurethane seal material consists of various combinations of polyols from which a large range of hardness can be obtained.

The standard "cup" seal is usually the least expensive. Conical seals are very effective in thin wall pipe as they compensate very well for any out-of-roundness. Bi-di pigs are very effective for both sealing and cleaning, provided there is no severe out-of-roundness. Other factors need to be considered and pig suppliers should provide additional guidance in this regard.

13.5.2.3.3 Foam pigs

For foam pigs to seal well, they must maintain good contact with the pipe wall and have some compensation for wear if they are to perform well over any distance. Being of cylindrical shape, they contact the pipe wall over their entire length and unit loading is reduced. It is impossible to make foam that has the same tear and abrasion resistance as a solid-cast urethane; thus, manufacturers apply criss-cross or spiral patterns of various coatings of solid-cast urethane. This achieves a greater degree of both wear resistance and wear compensation. Many types of foam pigs can be used for both cleaning and dealing.

13.5.2.3.4 Solid-cast pigs

Solid-cast pigs are very common in smaller sizes. Most are small and their diameter lines are not very long, and the pigs are not very heavy, so wear is not usually a problem. By making the pigs a little oversized, the wear compensation is usually adequate and in any event, replacement costs are minimal. Some companies produce this pig in standard sizes up to 36 in.

13.5.2.3.5 Spheres

Spheres are probably the best known and widely used sealing pigs. Their shape makes them ideal for use in automatic systems, and this is the main reason why they are widely used for removing condensates. Since they roll easily, they are very easy to automate and larger numbers can be installed in a trap and automatically launched at predetermined internals. They have an additional advantage that they can be discharged into other, larger, lines and can be collected at some main receiving point to be sorted and reloaded into their original traps.

Most spheres are capable of being inflated to the required diameter ranging from nominal *ID* to 1-2% over size, depending on the requirements and the experience with a particular pipeline. Since they are spherical and have only one sealing surface, one must pay particular attention to the design of the pipeline to ensure that the sphere is guided past any voids or obstructions and can maintain its seal at all times. Specially designed "flow tees" must be installed in all laterals of a line designed to run spheres.

13.5.2.4 Gauging pigs

Gauging pigs are basically utility pigs that are fitted with a "gauging plate." A gauging plate is a circular plate made from mild steel, or more commonly aluminum, that is machined to a specified diameter, e.g., usually 95% of the smallest diameter of the installed pipeline. If the gauging plate sustains any damage, an investigation is carried out to establish the possible cause(s) of the damage and remedial action is taken. Gauging pig runs are necessary to ensure that there is nothing protruding inside the pipeline that might cause an obstruction and to ensure that the ovality of the pipeline is within accepted tolerances.

13.5.2.5 Dual-diameter pigs

13.5.2.5.1 General considerations

Dual-diameter pigs are designed to traverse pipeline systems that have built with more than one nominal diameter in between pig traps. Older onshore hydrocarbon pipelines were designed with two diameters so that the smaller pipe could be transported inside the larger one to reduce shipping. Today, onshore hydrocarbon pipelines are not laid with more than one diameter between traps. Subsea pipelines are reversing this trend, thus increasing the need to pig subsea production systems by looping from one line into another. Often, there is a need to tie in marginal fields to existing export pipeline. Thus, there is an interest in pigs that are capable of more effective multi-diameter performance.

13.5.2.5.2 Foam pigs

Foam pigs are widely used in dual diameter pipelines due to their ability to conform to extremely difficult pipe configurations. Foam pigs have the ability to enter a pipeline through a tee, traverse zero-radius bends, and pass through valves as much as 50% less than the pipeline diameter.

13.5.2.5.3 Hydrocarbon line configuration

Dual diameter pipelines should be avoided, if possible. When installed, a gradual transition from one line to the other is essential, particularly if there are low pressure or low flows involved. Sudden changes could cause the pig to hold up and either cause an uncontrolled "speed excursion" as the pig breaks free, or cause the flaps to reverse and stick the pig, if the pressure builds up sufficiently.

Figure 13.51 shows a common dual-diameter pig configuration consisting of a solid disk for smaller diameter, with a pair of flaps to provide drive in the larger diameter. Figure 13.52 shows a dual-diameter pig entering a section of smaller diameter pipe. Unless they are of dual-module design (the two modules linked by a universal joint), multi-diameter pigs of this type may require very large bend radii.

13.5.2.6 Specialty utility pigs

13.5.2.6.1 General considerations

The majority of operating pipelines can be successfully pigged using standard utility pigs. Occasions arise where a standard utility pig cannot be used and a specialty pig is required. The following discussion describes some of the more commonly used

Figure 13.51 Dual-diameter pig.

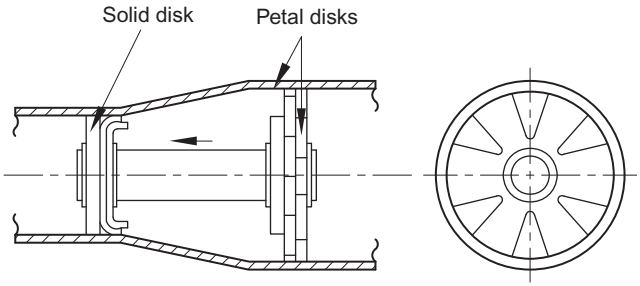

Figure 13.52 Dual diameter pig entering a section of smaller diameter pipe.

specialty pigs that have been developed to address those occasional situations where standard pigs cannot be used.

13.5.2.6.2 Magnetic cleaning pigs

The presence of ferrous debris, such as welding rods, metallic dust, etc., normally does not present a major problem in an operating pipeline. However, it is essential that this and all other debris are removed if an ILI tool is planned to be used. Since the volume of debris cannot be predicted until cleaning actually begins, magnetic cleaning programs should take place well in advance before any form of ILI begins. Figure 13.53 shows a specialty-designed magnetic cleaning pig that will reduce the number of runs required.

13.5.2.6.3 Pressure-bypass pigs

The front of the pressure-bypass pig is fitted with what is effectively a pressure relief valve. It has a diameter of about 40% of the internal bore of the pipeline. It is set to open at a "pre-set" differential pressure. Should the pig build up a large accumulation or slug of debris ahead of it, the differential pressure across the pig rises as the pig works harder to push the debris. Once the "pre-set" differential pressure is reached,

Figure 13.53 Typical magnetic cleaning pig.

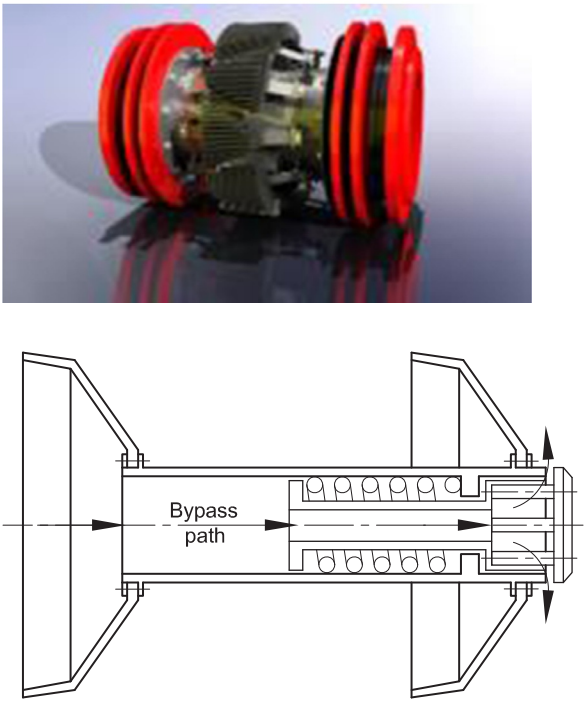

Figure 13.54 Typical pressure bypass pig (bypass opens at a preset differential pressure).

the bypass valve opens, resulting in the debris being jetted or blown away from the front of the pig. This causes the differential pressure required to run the pig to drop, which then closes the bypass valve again (Figure 13.54). This sequence may take place hundreds of times in a dirty pipeline before the pig finally reaches the receiver. It is highly unlikely that the pressure bypass pig can ever totally block the pipeline, since the bypass allows a continuous flow, thus giving time for the problem to be investigated and rectified.

13.5.2.6.4 Pin-wheel pigs

The pin-wheel pig is designed specifically to remove very hard wax and scale. The cleaning assemblies consist of a number of heavy-duty polyurethane disks that have an outside diameter that is significantly less than the inside diameter of the pipeline.

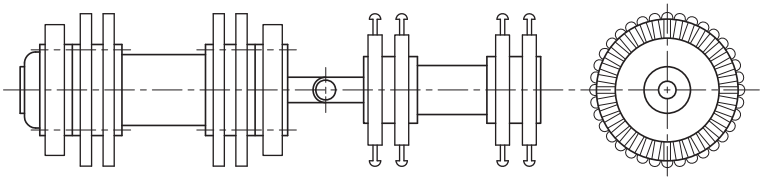

Figure 13.55 Schematic of a typical "pin-wheel" pig.

Cleaning disks protrude radially from the circumferential edge of each disk. On the outer edge of each disk are a number of steel hardened "removable" pins that prevent damage to the pipe wall (refer to Figure 13.55). The diameter across two opposite pins is greater than the inside diameter of the pipeline. Thus, when the pig is traveling through the line, the pins are bent back at a slight angle that assists in the cleaning action and compensates for any wear. Unfortunately, none of the wax or scale removed from the pipe wall will actually be pushed forward by the pig itself. The removal of wax and scale will have to be done by another type of specialty pig as part of an overall program. The number of pin-wheel disks is determined by the size of the pipeline, degree of wax, and scale to be removed, etc. and should be tailored to suit the circumstances.

13.5.2.6.5 Shunting pigs

A shunting pig consists of a three-module articulated pig that has been specifically developed for the removal of stuck or lost pigs from pipelines (refer to Figure 13.56). Experience indicates that if a pig becomes stuck or lost in the pipeline, there is little point in running a second identical or similar pig to push out the first pig. The second pig is also likely to fail for the same reasons and simply add to the problem. When a second pig is used to push a stuck or lost pig, the additional effort to remove the first pig causes the second pig to become damaged as well. When using a three-module articulated pig, the first module will probably become damaged as it pushes the debris ahead of it. The drive will be maintained because of the second and third modules that never come into contact with the debris being pushed. Metal-metal contact between the shunting pig and the debris is avoided by fitting a hard polyurethane bumper to the front of the first module. The shunting pig is also equipped with permanent magnets for tracking purposes, together with a battery-operated electromagnetic transmitter for positive location when stationary.

Figure 13.56 Typical shunting pig.

13.5.2.6.6 Hyperbaric spheres

Hyperbaric welding is commonly used to join (tie-in) or repair subsea pipelines in situ. "Habitat" is first positioned around the weld area and the water is then expelled by pumping in helium or a mixture of oxygen and helium. Welding and HOT processes can then be performed while working in a dry environment.

Hyperbaric spheres are used to plug the open ends of a pipe (refer to Figure 13.57). Hyperbaric spheres are installed by divers who must insert, position, and inflate the spheres in each end of the pipes to be joined. Hyperbaric spheres are normally manufactured to order and may be fitted with removable handles to assist the diver in positioning them. When the tie-in has been completed, the spheres are pumped through the pipeline by pigging in the usual way. Hyperbaric spheres are constructed from three layers of polyurethane:

- Core
- Intermediate layer that provides the strength
- Softer outer layer, usually with a "waffle" pattern that provides an optimum seal

Hyperbaric spheres will retain a differential pressure of between 15 and 45 psi (1-3 bar) depending on the pipeline diameter. The spheres require between 60 and 90 psi (4-6 bar) to remove the pig from the pipeline. In harsh conditions or moderately deep water, two spheres in each pipe are used.

13.5.2.6.7 High differential pigs

There are instances that require a subsea pipeline to be shutdown and depressurized so that maintenance or repair activities can be carried out. Emptying the line, flooding it, and then subsequently dewatering and recommissioning it, which may or may not require drying it, would be cost-prohibitive. One way of achieving this is to place a slug of water, or some other fluid, trapped between two or more pigs into the area where the work is carried out and then balance the pressure in the line with the static head pressure caused by the depth of the water. This allows the line to be out without contaminating the pipeline or polluting the sea. Once the work is completed, the line is repressurized and the pig train is pumped out.

In principle, the above procedure is simple and the pigs should only be required to create a seal and not have to resist any pressure. In practice, however, the temperature

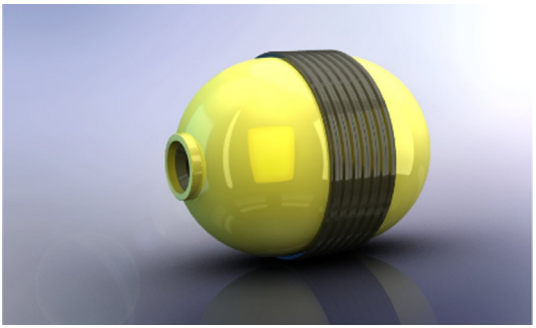

Figure 13.57 Typical hyperbaric sphere.

Figure 13.58 Typical high-differential "DP" pig.

and tidal changes can, and do, result in pressure fluctuations. Therefore, it is essential that the pigs be capable of resisting at least modest pressures.

High differential pigs require a very high differential pressure (DP) to move them (refer to Figure 13.58). Bidirectional mandrel pigs with disks of different diameters and hardness are stacked closely together. When forced into the pipeline, the elastomer disks are compressed which creates very high pipe wall friction and thus requires a high DP to move the pig. Wear, especially if the pig must be pumped long distances into position and leakage through the body are two potential problems. Common practice to reduce wear is to apply liberal quantities of silicone sealant to all surfaces during assembly.

13.5.3 ILI tools and services

13.5.3.1 General considerations

There are over three dozen different tools used by more than two dozen companies specializing in ILI services. Information provided by ILI cover a wide range of inspection and trouble-shooting needs. Two of the more commonly used are metal loss (includes corrosion) and geometry. Other services include:

- Geometry measurement
- Leak detection
- Temperature and pressure recording
- Bend measurement
- Product sampling
- Wax-deposition measurement
- Curvature monitoring
- Pipeline profile
- Mapping
- Metal-loss detection
- Photographic inspection
- Crack detection

13.5.3.2 Metal loss pigs

Regardless of what causes metal loss, e.g., corrosion, erosion, gouging, etc., it is the most serious pipeline problem. A lot of research and development money has been spent on developing ILI tools to detect metal loss than on all the ILI tools combined. The two basic technologies used are MFL and ultrasonic.

13.5.3.3 Magnetic flux leakage

The MFL tool can be used in either liquids or gases and can measure metal loss, even in relatively thin wall pipes, which can be difficult with ultrasonic tools. Magnetic flux is induced into the pipe wall between two magnets. As shown in Figure 13.59, any metal loss that occurs in the pipe wall results in the flux lines being distorted. This distortion is sensed by a detector that then generates an electrical signal that indicates metal loss. Signals are passed through microprocessors and the data is stored for detailed computer analysis and subsequent reporting on completion of the run. Continuous development of magnets, sensors, computer analysis, and reporting systems has led to what is now referred to as low-resolution tools, the latter being the result of the very latest technology.

13.5.3.3.1 Ultrasonic

Ultrasonic pigs can be used in homogenous liquids and are capable of measuring much heavier wall thicknesses than is possible with most magnetic-flux pigs. As shown in Figure 13.60, ultrasonic transducers transmit signals perpendicular to the surface of the pipe. It then receives the echo signals from both the internal and external surface of the pipe and converts them into digital data to detect any anomalies. The ultrasonic technique is based on the direct measurement of the remaining wall thickness. Figure 13.61 shows a typical ultrasonic inspection tool.

Ultrasonic inspection tools use the principle of ultrasonic waves traveling in a liquid medium. In order to inspect a gas pipeline, the tool needs to be in a liquid slug

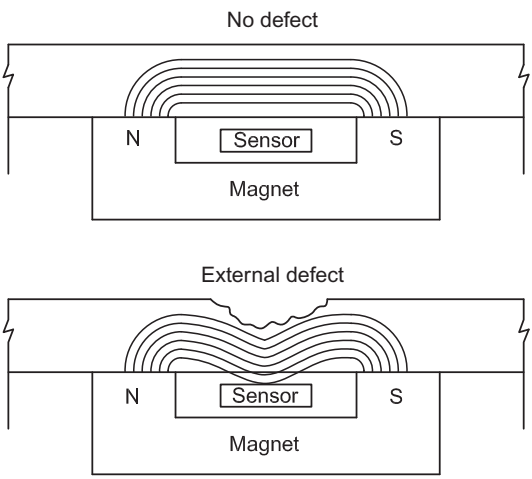

Figure 13.59 Principle of magnetic flux leakage (MFL) for metal loss detection.

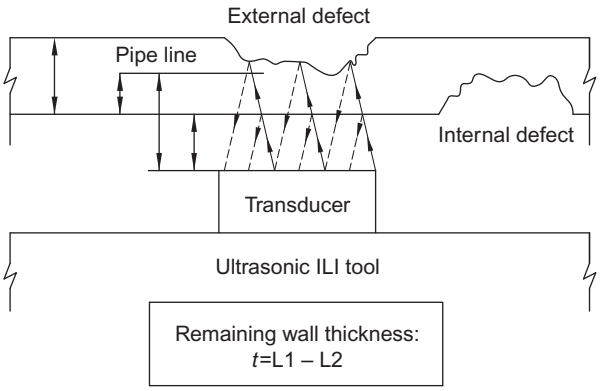

Figure 13.60 Schematic showing the principle of ultrasonic (UT) metal loss detection.

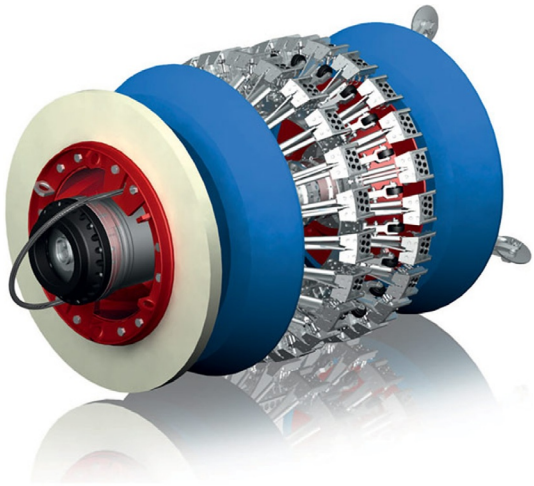

Figure 13.61 Typical ultrasonic inspection tool.

with seal pigs in front and behind the tools and with a homogenous liquid in between. Since ultrasonic tools are a noncontact system, they lend themselves more easily to bidirectional use. They are particularly useful to inspect offshore loading/unloading pipelines where it is difficult to provide a receiving facility at the end.

Most metal loss pigs can detect defects such as internal and external corrosion, pitting, mechanical faults, lamination, dents, and other deformations as well as hydrogen induced cracking (HIC). Stress corrosion cracking cannot be detected by metal loss pigs, but it can be detected by another type of ILI tool using special ultrasonic transducers.

13.5.3.4 Geometry pigs

13.5.3.4.1 General considerations

A pipeline is a pressure vessel and is subjected to relatively high pressures and cyclic pressures. Being buried or submerged provides a high level of protection, but it cannot provide complete protection. There are natural hazards such as earthquakes, landslides, subsidence, and floods that have the potential to damage pipe. There are more

risks and problems associated with third-party interference. Any of these events may cause physical damage, resulting in dents, buckles, gauges, etc., but they rarely cause the line to rupture immediately. Instead, they result in deformations of the line which is sometimes called "insidious defects" acting gradually but with grave consequence. This is what some forms of physical damage can do to a pipeline. Therefore, it is very important that every significant deviation from the ideal shape for a pressure vessel, i.e., perfectly round, be investigated. To investigate these deviations, it is necessary to find them, and this is the main purpose of geometry pigs, i.e., to locate and measure reductions in diameter.

13.5.3.4.2 Gauging pigs

Gauging pigs consist of a utility pig fitted with a metal plate that is machined to a percentage (normally 95%) of the *ID* of the pipeline. They have been used for many years to check whether there are any reductions in the internal diameter of a pipeline. It is not uncommon for the gauging plate to become damaged and the production operator then had the problem of determining what caused the damage, where was the damage and whether the pig may not emerge at all and be stuck in the pipeline. In severe cases, the pig may not emerge at all and be stuck in the pipeline. Some of these inherent problems are overcome by using aluminum gauging flanges, but these do not provide information as to the type, extent, or location of the problems. Most common use of the gauging pig today is simply to determine whether or not ("go" to "no-go" gauge) a full geometry survey is necessary.

The two primary technologies used for geometry surveys are electro-mechanical and Eddy currents.

13.5.3.4.2.1 Electro-mechanical tools By far, the majority of geometry pigs utilize this type of technology. Changes to the internal diameter of the pipeline are detected by arms or fingers, which are spring-loaded in order to keep them pressed against the pipe wall. Any change in diameter causes the arms or fingers to move. The motion is translated mechanically, usually to a central rod that passes through seals into an instrument package installed within the pig body where the motion is digitally recorded and analyzed on a personal computer (PC).

The "Kaliper" pig uses an odometer wheel to measure the distance traveled, and mechanically activated stylus to indicate the extent of the damage (refer to Figure 13.62). The resulting paper chart provides a trace which is proportional in length to the pipeline and which indicates reduction in diameter. Skilled analysis can provide a measure of the reduction and a reliable estimate of the pipeline shape and probable cause. The Kaliper pigs have continuously improved, and most now contain an electronic package and rely on computer analysis that enhances both their accuracy and the amount of information that can be provided.

The "Cal" pig is very similar to the "Kaliper pig" with a few differences (refer to Figure 13.63). The most obvious difference is the finger sensor mechanism that, unlike the Kaliper pig, extends out beyond the periphery of the rear pig cup, thus allowing the sensors to make direct contact with the pipe wall via small wheels. The Cal pig provides a trace on a paper chart similar to the Kaliper pig.

Figure 13.62 Kaliper pig.
Courtesy of T.D. Williamson, Inc.

Figure 13.63 Cal pig.
Courtesy of Pipetronix.

13.5.3.4.2.2 Eddy current tools Eddy currents are electrical currents that occur when an alternating magnetic field is induced into the pipe wall. Eddy currents are affected by any changes in the physical characteristics of the material or its geometry.

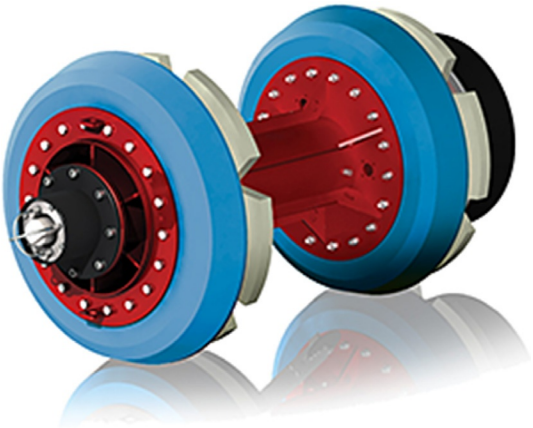

Figure 13.64 Electronic gauging pig (EGP).
Courtesy of H. Rosen Engineering.

The electronic gauging pig (EGP) utilizes eddy currents, a noncontact method, to provide a profile of the *ID* of a pipeline (refer to Figure 13.64). The EGP utilizes a portable data analysis package, complete with a visual display unit.

13.5.3.5 Leak detector pigs

13.5.3.5.1 General considerations

Most pipeline systems are equipped with automatic leak detection alarm systems. There are a number of technologies used to detect and locate leaks in a pipeline. The most commonly used technologies are:

- Ultrasonic
- Pressure decay
- Metering
- Radioactive tracers

13.5.3.5.2 Ultrasonic pigs

Ultrasonic pigs work on the principle that a liquid leak will emit an ultrasonic frequency when the fluid is forced through a small hole in the pipeline under pressure. The pig must not be in close contact with the pipe wall to ensure that it does not make any sounds that the hydrophones may pick up and record as a leak. An instrument in the pig's body prints out a tape that provides details of the time at which the leak is heard. Using a time base and a magnetic marker system placed, known points on the outside of the pipeline allow the leak to be traced. Figure 13.65 shows a typical ultrasonic leak detection pig.

13.5.3.5.3 Pressure decay pig

If a section of a pipeline is isolated using a utility pig or sphere then, if there is a leak in that section, the pressure will fall. There are a number of ways in which pigs can be used to detect leaks by pressure decay. A utility pig or series of pigs are inserted

Figure 13.65 Ultrasonic leak detection pig.
Courtesy of H. Malhak AG.

into the pipeline and pumped to some predetermined point before being halted. The pressure ahead of and behind the pig(s) is monitored to determine in which direction the leak lies. If the pressure decays in front of the pig(s), then the pig is moved in that direction and halted again. This procedure is repeated until the leak has been isolated. On long pipelines, this procedure is very expensive and is a time-consuming operation.

13.5.3.5.4 Metering pig

The liquid escaping due to a leak in a pipeline causes a small flow within the line, due to the residual pressure, even when it is shut down. Modern instrumentation has allowed this flow to be measured and recorded. A metering pig is pumped to any position within the pipeline and halted. The pipeline is pressurized and the pig measures the flow of fluid through the flow meter housed in the body. The flow meter then transmits both the volume and the direction of flow through the pipe wall to the operator, from which it is possible to determine the location of the leak.

13.5.3.5.5 Radioactive tracers

This method is made possible by the development of highly sensitive detectors which allow the use of very low level, short half-life radioactive sources. The tracer fluid is introduced into the pipeline and leaks out into the surrounding pipeline cover. A pig carrying that detector is then launched which records the time at which the leak is detected. With radioactive markers attached to the line at known points, it is possible to accurately locate the leak by reference to the time intervals between the markers which precede and/or follow the detection of the leak.

13.5.3.6 Bend detector pigs

13.5.3.6.1 General considerations

When running large, heavy, and expensive ILI tools, it is essential to ensure that they do not become stuck in the pipeline which could result in damage to an expensive tool, cause serious damage to the pipeline, or require the pipeline to be shutdown to remove

it. Most ILI tools are designed to negotiate 3*D* bends and would become stuck if they entered a 1.5*D* bend. Such a situation could be caused by a lack of, or incorrect, "as laid" records. A significant amount of work has therefore been done in the development of pigs that are capable of negotiating tight bends and recording their position and true radius. The two technologies used to negotiate tight bends and record their position are mechanical methods and electrical transducers.

13.5.3.6.2 Mechanical methods

One mechanical method employs a simple and ingenious system. It comprises two geometry pigs in tandem with a specially designed universal joint and cable assembly running between them. As the pig negotiates a bend, the cable assembly is deflected and records the magnitude of the deflection and the span length of the bend. Knowing the location and measurement of the bends provides useful benchmarks for the geometry survey as well. Figure 13.66 shows a bend locator pig.

13.5.3.6.3 Electrical transducers

Electrical transducers are designed not only to detect bends but also to define them as well. In the dual module design, the rear module is flexible and conforms to the shape of the bend. The extent of the flexing is measured by transducers and the data is stored for preliminary on-site analysis on completion of the pig run.

13.5.3.7 Mapping pigs

13.5.3.7.1 General considerations

The stability of pipelines, especially in subsea areas, is a major concern and it is important to know when there is any movement of the pipeline. Movement may be due to subsidence, earthquakes, erosion (typically of the sea bed), or warming of the surrounding soil in permafrost areas. Various methods of detecting this have been put forward, but only a few have been successful.

13.5.3.7.2 Gyroscopes

To monitor the profile of a pipeline, the pig must be capable of measuring and recording its position in all three axes on a continuous basis (exact task of inertial navigation system on board an aircraft).

Figure 13.66 Bend locator pig.
Courtesy of Enduro Pipeline Services, Inc.

The "Geopig" is one of the most advanced units that uses a "strap down internal measurement unit (SIMU)" (refer to Figure 13.67). This unit contains both accelerometers and gyros which, when coupled, provide input for computing pipeline curvature, orientation of that curvature, and its position. The "SIMU" is installed inside the pig body, which in turn is supported on elastomer drive disks which ensures that the "SIMU" will travel in close approximation to the center line of the pipe. It is recognized that the pig's pitch and heading will not coincide with the slope and azimuth of the pipeline; so, it is fitted with a ring of sonars at each end of the internal system to provide constant readings of the pig-to-pig altitude.

Scout pigs are used essentially for mapping and have an onboard inertial navigation system to survey the route of a pipeline which can then be used to either create a log to verify an existing log or check for ground movement (refer to Figure 13.68).

13.5.3.8 Video recording pigs

There are situations where visual confirmation of information is highly desirable such as when inspecting in situ coatings and identification of less obvious problems. The video recording pig tools can monitor the internal conditions such as corrosion, dents,

Figure 13.67 Internal geometry pig-geopig.
Courtesy of Nowsco Pipeline Services.

Figure 13.68 Typical scout pig.
Courtesy of Gerhard KOP.

ovality, buckles, or other visible internal flaws and internal coating, if present. However, the video recording pig cannot measure the depth or volume of them. Since the tool must have an adequate light source, it is better suited to monitor a gas pipeline rather than a liquid pipeline. When a liquid pipeline is inspected, it must be drained, cleaned, and dried.

13.5.3.9 Wax deposition survey

One of the problems with a geometry pig which uses mechanical sensors (fingers) is that any debris in the pipe which is not moved by the pig will indicate a reduction in diameter. On the other hand, noncontact geometry pigs that utilize eddy currents will not show any nonmetallic debris as the signals will pass through it and be reflected by the pipe wall. By combining these principles, a build-up of wax, or any other nonmetallic debris, in a pipeline can be measured and recorded.

13.5.3.10 Product-sampling pig

One of the most important factors affecting a pipeline is the product which it is carrying. In many cases, the product is not homogenous. For example, water, sand, gas, etc. will fall out and deposit at low points. In low-flow conditions, this settling out can give rise to various forms of corrosion, scale, and bacteria. One way to assess what effect this has on a pipeline is to take samples and store them at ambient conditions until they can be analyzed. A product-sampling pig consists of a sampling bottle that is evacuated prior to launch and a solenoid valve that is triggered at a predetermined point. The body of the pig is eccentric to ensure that the sampling tube is always pointing vertically downward and takes the sample from the lowest point in the pipe. After the sample has been taken, the solenoid valve closes, the pig continues to the receiving trap where the flask is removed, and then the flask is taken to the laboratory for analysis.

13.5.4 Pig signalers, locators, and tracking systems

13.5.4.1 General considerations

It is important to know exactly when a pig has left the launching trap and when it arrives at the receiver. It is also important to know during pigging operations where the pig is at any given time. Then, if anything goes wrong, valuable time is saved in looking for the pig.

13.5.4.2 Terminology

13.5.4.2.1 Pig tracking

Pig tracking literally means following the path of a pig either continuously or, more likely, a series of predetermined points. This is achieved by transmitter/receiver systems, mass balance via computer calculations and acoustics. Pig signalers may be used

in conjunction with other methods to assist tracking, but they are not suited for this purpose when used alone.

13.5.4.2.2 Pig signalers

Any pipeline that is pigged should be fitted with a pig signaler at both the launcher and the receiver. The pig signaler confirms when a pig has begun and completed its journey and thus determines when the various valves can be actuated during the launch and receives procedures. Pig signalers can be either intrusive or nonintrusive.

13.5.4.2.2.1 Intrusive pig signalers Except for subsea installations, most permanently mounted signalers are intrusive. They are actuated when the pig moves a trigger or plunger that protrudes into the pipeline that causes a shaft within the signaler to rotate or reciprocate which in turn gives a visual indication and/or provide an electrical signal. Figure 13.69 shows a typical intrusive visual pig signaler while Figure 13.70 shows a typical intrusive electrical pig signaler.

13.5.4.2.2.2 Nonintrusive pig signalers Nonintrusive pig signalers do not require physical contact with the pig and can be mounted on or near the pipeline. These are used extensively for subsea installations. They are mounted externally and are triggered by some signal emitted by the pig such as magnetic field, radio transmitters, and radioactive isotopes. Figure 13.71 shows a typical nonintrusive pig signaler.

Most systems require a permanent magnet to be installed in the pig and utilize the principles of a magnetometer to sense the change in the magnetic field as the pig passes by. Alternatively, a radioactive source and radiation detector may be clamped outside the pipeline that senses the change in density that occurs with the passage of

Figure 13.69 Intrusive visual pig signaler.
Courtesy of Inpipe Products Ltd.

Figure 13.70 Intrusive electrical pig signaler.
Courtesy of T.D. Williamson.

Figure 13.71 Nonintrusive pig signaler.
Courtesy of Pipeline Pigging Products, Inc.

the pig. Some systems utilize a radioactive source in the pig. Instrumentation exists where extremely low levels of radiation can be detected thus making this safe and reliable method of nonintrusive signaling. Signalers that receive radio signal transmitted by the pig are not common. Transmitter systems are usually applied to pig location and tracking.

The advantages of nonintrusive signalers are they can be installed on an operating pipeline without requiring welding or penetration of the wall of the pipeline. They are portable, so they can be used on a temporary basis and can be easily moved from place to place and then removed for reuse elsewhere.

13.5.4.2.3 Pig locators

There are four commonly used devices for locating and tracking pigs:

- Transmitters (used mainly on land lines)
- Pingers (used on subsea lines)
- Acoustic Transponders (used on subsea lines)
- Radioisotopes (used in both land and subsea situations)

13.5.4.2.3.1 Transmitters Electromagnetic systems are the most popular means of pig locators today. A coil is placed on the pig and an alternating magnetic field is emitted. The alternating field penetrates the pipe wall and the soil over the pipeline. The magnetic field is detected by a receiver that comprises a search coil, amplifier,

and headset. The signal from the transmitter is received by the search coil and is displayed visually on a meter and acoustically by the amplifier emitting an audible signal. The range is

- 15-18 ft. (5-6 m) onshore
- 3-6 ft. (1-2 m) offshore

13.5.4.2.3.2 Pingers Pingers have been used for many years by the marine industry as subsea markers and adapted for use within a pipeline. Pingers work best in liquid pipelines. Liquid acts as a carrier for the signal from the pinger to the pipe wall and then into the water outside pipe. The pinger emits a "ping" every few seconds which can be picked up by receivers located in boats or ships in the area over the pipeline.

13.5.4.2.3.3 Acoustic transponders Acoustic transponders consist of a receiver-transmitter which transmits an acoustic reply on a preset frequency after receiving a recognized interrogation pulse broadcast from a vessel. The transponder is installed on the pig similar to the pinger. By measuring the time for the reply from the pig, it is possible to determine the distance from the vessel to the pig. With the water depth determined by other means, it is possible to calculate the pig location. Since each transponder has an individual reply frequency, it is possible for a vessel to track several pigs at the same time. This can be useful when "pig trains" are run, typically when commissioning long offshore pipelines.

13.5.4.2.3.4 Radioisotopes Pig tracking using radioisotopes involves fitting a small radioactive source to the pig just prior to launch. The pig can be tracked or located by means of sensitive radiation detectors on the outside of the pipeline. Very low level radioactive sources are used to avoid any significant hazard, and the half-life can be selected to suit the time required. Radioisotopes can be used in the gas or liquid lines and unaffected by most external factors. Due to the very small size of the radioactive source, it is possible to track and locate pigs in pipelines of only a few millimeters in diameter. This technique is successful in finding leaks in subsea pipelines.

13.5.4.2.3.5 Pig location and tracking services It is advisable to monitor the run of the pigs during pre-on-line inspection and if a pig is stuck or lost. This is usually carried out by a specialist service company or by specially trained pipeline operating personnel.

13.5.4.2.3.6 Magnet pig tracking Magnet pig tracking is a system that is able to track any moving steel-bodied pig from above ground at depths of cover up to 6 ft. (2 m). When cover is greater than 6 ft. (2 m) or where a nonferrous is being used, the pig is fitted with a small permanent magnetic package. The advantage of this system is that it does not rely on an internal power source, which might fail during the pig run. Tracking equipment consists of a sensor that is placed on the ground above the pipeline, and remote-monitoring unit is generally located in the tracking vehicle. Two crews are usually required, operating on a leap-frogging basis with tracking locations established at suitable intervals along the pipeline route.

13.5.4.2.3.7 Pressure monitoring Pressure monitoring is helpful in pig tracking, provided a pipeline has good internal geometry and no major reductions in bore due to nonstandard valves, bends, and fittings; then running pressure behind the pig should be relatively constant. If the pig encounters a problem area, e.g., dent, buckle, accumulation of debris, etc., then the running pressure will inevitably rise. The reason for accurately recording running pressure behind the pig is that any erratic pressure changes will indicate abnormal running of the pig and point to a possible problem in the line. On completion of the run, the pressure chart will help to determine its location. When used on subsequent pig runs, the charts can be compared and will give a god indication of whether erratic pressure changes are a result of fixed geometry problems or of moving debris.

13.5.4.2.3.8 Acoustic monitoring The acoustic monitoring method of listening to a pig as it travels through the pipeline is by positioning a specially tuned sensor above the line. The sensor is connected to a monitoring unit that processes and filters the signal for output to headphones worn by the operator. Equipment is battery operated and extremely portable and is generally used by the pig tracking crews who can listen to the approach of the pig toward their tracking location.

Further Reading

[1] ASME B31.4, Standard for Liquid Transportation Systems for Hydrocarbons, Liquid Petroleum Gas, Anhydrous Ammonia and Alcohols, ASME, New York City, 2012.
[2] ASME B31.8, Standard for Gas Transmission and Distribution Piping Systems, ASME, New York City, 2012.
[3] API RP 14E, Recommended Practice for the Design and Installation of Offshore Production Platform Systems, API, Washington, DC, 2007.
[4] Piping Engineering. Tube Turns Inc., sixth ed., 1986.

Pipeline operations

14

Safe and economic operation of a pipeline system requires that various routine activities be performed on a regular basis. Certain special operations or tests are performed to monitor the integrity of the pipeline system and to properly maintain it. This chapter will provide a brief description of these operations.

14.1 Pipeline commissioning

Commissioning a pipeline begins when the pipeline is connected to the upstream facility source and the downstream delivery point, after completing the hydrostatic pressure testing and all required precommissioning has been completed. Commissioning refers to the initial "start-up" period, when the pipeline system is tested and put into operation. During this period, performance of the entire system is checked, against specified operating conditions, per pipeline specifications and design.

Depending on the product to be transported, the following parameters are monitored during the commissioning period to ensure that no hydrate formation or corrosion will take place in the future:

14.1.1 Liquid pipelines

- Operating pressure, flow rate, temperature, and moisture content
- Product contaminants, sediments, or deposits
- The presence of corrosive components
- Corrosion rate
- Effectiveness of corrosion control system
- General condition of the pipeline system

14.1.2 Gas pipelines

- Operating pressure, flow rate, and temperature
- Dryness of the gas
- Corrosion rate
- Liquid or sediment buildup
- Effectiveness of corrosion control system
- General control of the pipeline system

A pipeline is considered ready for operation for operational duty when

- construction is completed in accordance with design;
- all design and code specifications are checked against operating conditions;
- pipeline has been cleaned and dried, if required;
- pipeline is filled with the fluid to be transported including any pack;
- control system is tested for operability.

Surface Production Operations. http://dx.doi.org/10.1016/B978-1-85617-808-2.00014-6
Copyright © 2016 Elsevier Inc. All rights reserved.

14.2 Routine operations

14.2.1 General considerations

Specific routine and special operations are essential in order to maintain an efficient, reliable, and economic pipeline operation. These operations may be caused by the following special pipeline conditions:

- Hydrate formation
- Formation of inorganic deposits
- Formation of waxy deposits
- Corrosivity of the transported fluid
- Transported product contamination

Operating and maintenance procedures should ensure that the line is monitored and analyzed routinely to avoid any of the above conditions. Data obtained from inspections surveys and corrosion-monitoring programs must be thoroughly evaluated and appropriate action taken. This allows early identification of future potential problems and a timely implementation plan can be developed to take corrective actions. Methods available to maintain a pipeline in optimum condition include

- pipeline cleaning,
- corrosion inhibition,
- liquid removal.

14.2.2 Pipeline cleaning

The buildup of potentially corrosive products or other deposits, for example, wax, gradually increases the internal roughness of the pipeline and reduces the pipeline internal diameter that, in turn, increases pressure losses and reduces flow rate. This, in turn, requires increased horsepower to move the fluids that increases the OPEX. Routine pipeline cleaning is of vital importance in maintaining the pipeline in optimum condition. Routine pipeline cleaning will

- prevent loss of efficiency,
- reduce the risk of corrosion,
- ensure effectiveness of inspection tool survey,
- facilitate effective corrosion inhibition.

Chapter 13, paragraphs *13.1.5.3.1–13.1.5.1.3.3*, provides a detailed discussion on the cleaning during pipeline operations. Cleaning is usually performed by using a brush or scraper pig (see Figure 14.1).

14.2.3 Corrosion inhibition

Inhibition of pipelines is performed to control internal corrosion. Special corrosion inhibitor chemicals are either injected continuously and mixed into the transported fluid or transported as a batch or slug. When continuous injection is carried out,

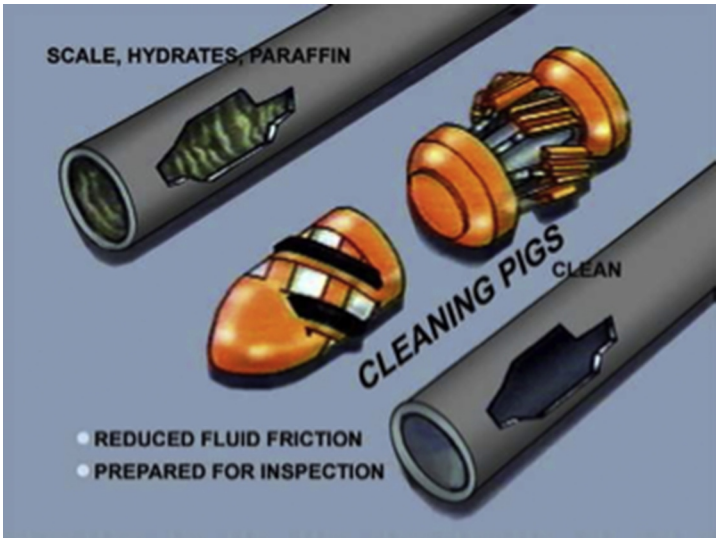

Figure 14.1 Brush and scraper pigs.

the upstream and downstream inhibitor concentrations are monitored to ensure that the inhibitor is steadily received at the end of the pipeline and thus applied throughout the pipeline. When applied as a batch or slug, the inhibitor is mixed with a carrier and sent down the pipeline between two spheres or cupped pigs. The objective is to apply a coating to the internal surface of the pipe, forming a protective layer.

Various types of inhibitors are available, such as

- barrier layer formers,
- neutralizing inhibitors,
- oxygen scavengers,
- miscellaneous (biocide and scale inhibitors).

Selection of an appropriate inhibitor depends upon the type of the transport fluid (gas, liquid, and two-phase) and its operating pressure and temperature. Normally, it is determined after testing. Figure 14.2 illustrates an inhibitor injection system.

14.2.4 Liquid removal

It is not uncommon for liquid to settle out in low spots along a pipeline flowing natural gas or two-phase flow. The liquid drops out when the gas velocity is insufficient for entrainment or during an intermittent fluid-phase pattern. Liquid may also drop out when the pressure-temperature-related solubility of the transported fluid changes as the pressure or temperature condition changes in the pipeline. The fluids that settle out may upset flow conditions, cause hydrate formation, and be corrosive. Removal of such fluids is essential for the proper operation and long-term protection of the pipeline. Periodic pigging is the normal procedure for liquid removal.

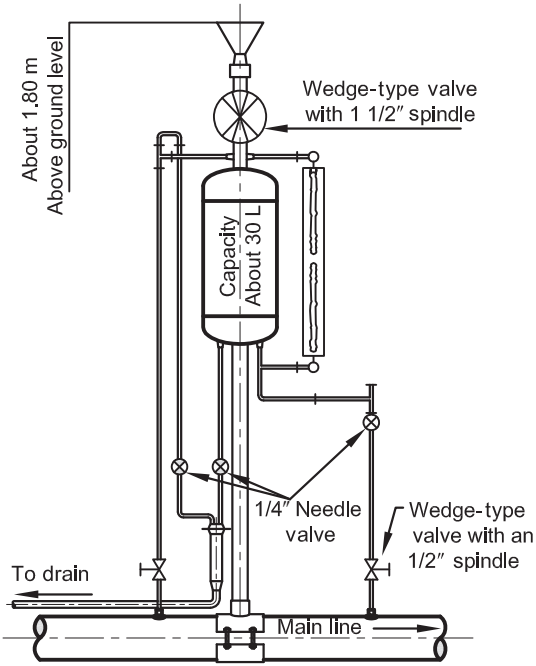

Figure 14.2 Schematic of an inhibitor injection system.

14.3 Pipeline integrity assessment

Pipelines are considered the safest means of transporting hydrocarbon; some failures do occur that result in spillage, loss of revenue, and possible impact on health, safety, and environment.

Continuity of operation is an essential requirement for successful operation of a pipeline. Hence, the pipeline integrity program is a very important part of pipeline operations. An integrity program is required to identify potential pipeline failures that may result in leaks and spillage. Several activities are required to continuously assess the integrity of a pipeline and to monitor its condition. They include the following:

- Pipeline inspection
- Pipeline corrosion monitoring
- Pipeline pigging
- Pipeline leak detection

14.3.1 Pipeline inspection

For onshore pipelines, surveillance through visual inspection is undertaken by flying, driving, and walking along the right-of-way. The purpose of this periodic inspection is to obtain early detection of events that might cause pipeline failure or create hazardous conditions. Aerial surveillance, by low-flying planes or helicopters, is the most

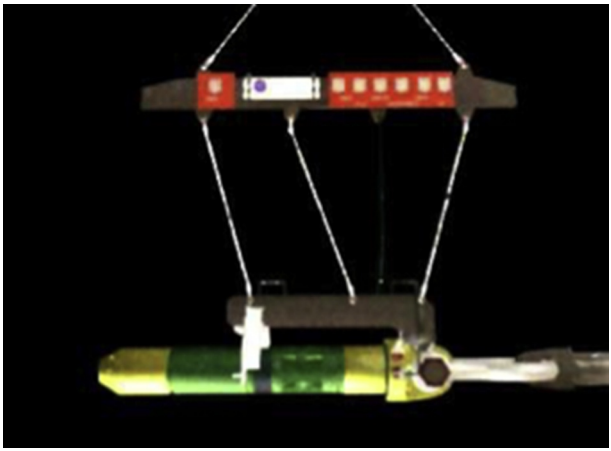

Figure 14.3 Remote-operated vehicle (ROV).

commonly used visual method. During the surveillance, the inspectors watch for any development or changes on or adjacent to the right-of-way. These include civil construction near or on the pipeline, soil erosion, stream, bed changes, and growth of brush and trees along the right-of-way. One of the primary responsibilities of the surveillance is to look for leaks by observing the discoloration of vegetation and then reporting their location.

When the pipeline is located in densely populated areas or where weather prevents air surveillance or where low flying is not permitted, pipeline walkers inspect the right-of-way at ground level. Inspection of offshore pipelines is conducted by diver intervention at selected spots or by using remote-operated vehicles (ROVs) as shown in Figure 14.3.

14.3.2 Pipeline corrosion monitoring

Corrosion of steel in process piping and pipelines is very common. When buried, as shown in Figure 14.4, steel invariably will suffer external corrosion degradation unless adequately protected. Figure 14.5 illustrates how a corrosion cell is formed, when a pipeline is buried, and how corrosion takes place. Pipelines are usually coated to protect the external surfaces of the steel pipeline against corrosion. Unfortunately, no coating system is, however, perfect. It must be supplemented by a cathodic protection system. For further discussion on pipeline corrosion, material selection, coating selection, and corrosion prevention, refer to *Chapter 11.2.3.3, 11.2.3.4, and 11.3.6. Note: Volume 5 provides a comprehensive discussion on corrosion types, control, coatings, cathodic protection, and inspection and monitoring*.

There are two cathodic protection systems used to prevent and monitor corrosion: impressed current system and sacrificial anode system.

The impressed current system is commonly used for onshore pipelines. In this system, as shown in Figure 14.6, a direct current (DC) is supplied to the pipeline and is

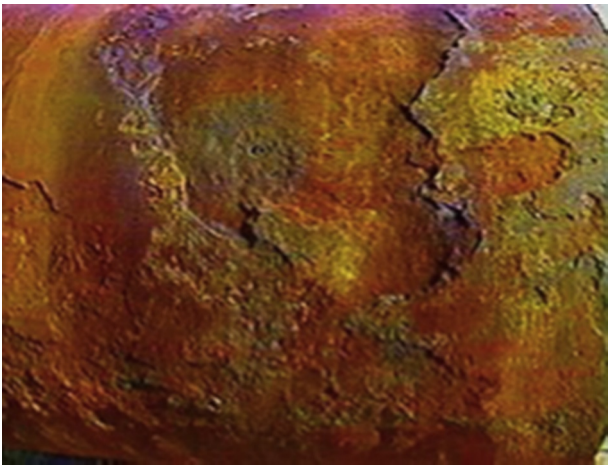

Figure 14.4 Example of external pipeline corrosion.

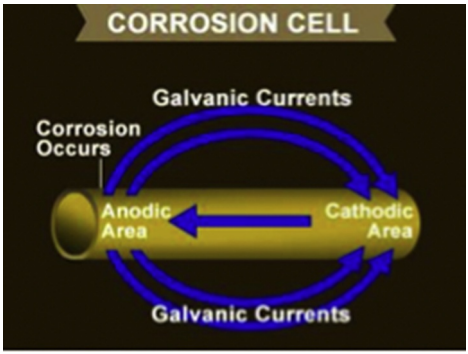

Figure 14.5 Corrosion cell.

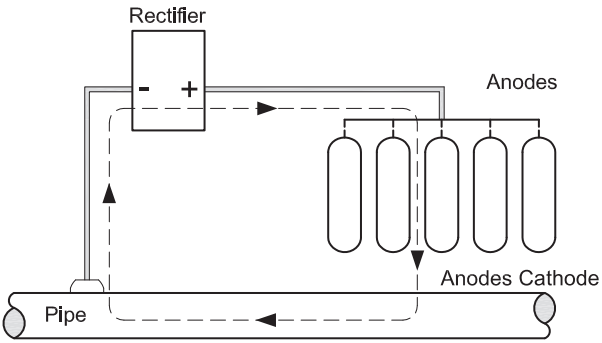

Figure 14.6 Impressed current system.

made to flow between the pipe and an anode ground bed via the soil. The current is adjusted to generate higher driving potentials in the pipe than those existing naturally in the corrosion cell. This neutralizes or reverses the effects of corrosion. The impressed current system requires transformer/rectifier stations that are monitored by measuring the output current/voltage reading periodically.

The sacrificial anode system is used to protect offshore pipelines and for onshore pipelines in very wet or low resistivity areas. Sacrificial anodes in the form of bracelets are placed around the pipeline at specified at specified intervals. The pipeline becomes the cathode of the system, and the anodes, which corrode, are sacrificed to arrest corrosion in the pipeline. This system prevents corrosion, essentially, by providing a designated location, other than the pipe, for corrosion to occur. Figure 14.7 shows a typical sacrificial anode system. The performance of the cathodic system is monitored by measuring the pipe to soil voltage gradient regularly at test stations.

If water is present in the fluid being transported, the internal pipe surfaces can also corrode. Water may be present, either alone or in combination with CO_2, H_2S, or other salt debris. The severity of corrosion depends upon the operating pressure, temperature, conductivity, soil condition, pH, and fluid velocity and composition. Figures 14.8 and 14.9 show the effect of internal corrosion in pipeline as well as external corrosion.

Corrosion control measures are important considerations in the design and construction of pipelines. These considerations include water removal and drying, chemical injection, and corrosion allowance. Regular and careful monitoring is essential to check the effectiveness of the protective corrosion measures. Several methods of corrosion monitoring are available:

- Corroding specimens
  - Coupons
  - Probes
  - Test spools
- Electrical/electrochemical methods
- Linear polarization instruments
- Hydrogen patch probes
- Chemical analysis methods

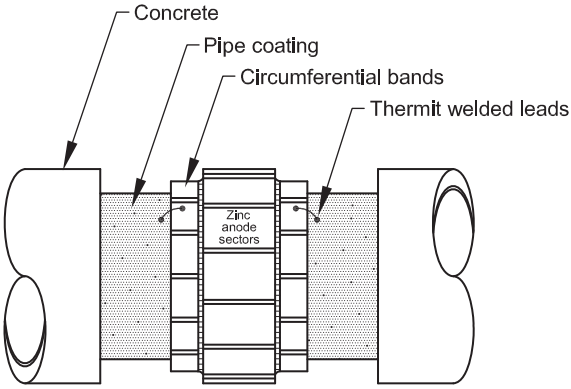

Figure 14.7 Sacrificial anode system.

Figure 14.8 Internal and external pipeline corrosion.

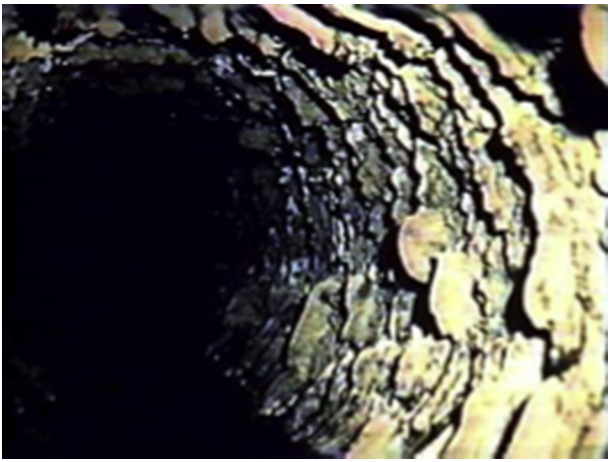

Figure 14.9 Internal pipeline corrosion.

  - Inhibitor tests
  - Corrosion product analysis
  - Bacteria count
  - Dissolved ion count
- Physical analysis methods
  - Radiography
  - Ultrasound
  - Eddy current

14.3.3 Pipeline pigging

Pipeline pigs and pipeline pigging are discussed extensively in Chapter 13. Using the correct type of pig and establishing the proper pigging program maintain the integrity and optimize the efficiency of the pipeline while safeguarding both the environment and company assets. Pipeline pigs are used extensively in gas, liquid, and two-phase pipeline operations for a variety of purposes. A pig is a mechanical device, which is forced through the pipeline by the pressure of the flowing fluid. It moves through the pipeline with the fluid. The pig normally consists of a cylindrical or spherical body, usually made of steel with rubber or plastic cups, attached on either end of the pig seal against the inner wall of the pipe.

Pipeline operations are conducted to

- remove wax and paraffin from the inner wall of the pipeline to improve flow efficiency;
- reduce liquid that has accumulated at low spots in two-phase flow;
- control liquid placement ensuring full water column during hydrostatic testing and during the dewatering after the text;
- separate products and reduce mixing between different types of products transported in the pipeline;
- facilitate batching of corrosion inhibitors, biocides, and chemical film lining;
- inspect pipeline for dents, buckles, leaks, or corrosion using gauging, caliper, or intelligent pigs.

Pigs are categorized as either utility pigs or intelligent pigs. Utility pigs have very few moving parts and they are primary used for cleaning and sealing (product separation). Figure 14.10 shows the different types (forms) of utility pigs that include

- spheres,
- foam pigs,
- gel pigs,
- cup pigs,
- bi-di pigs.

Selection of a utility pig depends upon the type of operation. Table 14.1 provides a general guideline for pigging objectives and applications. More detailed discussion is provided in Chapter 13.

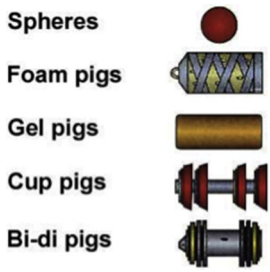

Figure 14.10 Types of utility pigs: spheres, foam pigs, gel pigs, cup pigs, and bi-di pigs.

Table 14.1 Guidelines for Utility Pig Applications

Objective	Application			
	Wall cleaning	Debris/liquid swabbing	Batching	Film lay-down
Internal corrosion control	X	X	X	X
Cleaning for corrosion assessment	X	X		
Maintenance of pipeline bore	X	X		
Control of liquid hold-up		X		
Pre, de- and normal commissioning	X	X	X	
Multi product pipeline			X	

Intelligent pigs provide early indications of unusual pipeline conditions and thus help prevent actual failures through the implementation of preplanned repairs, thereby saving unscheduled downtime and unplanned costs. Figure 14.11 is an example of an intelligent pig. One type of intelligent pig that is used frequently is the magnetic flux pig. It can be used in either liquids or gases and can measure metal loss, even in relatively thin wall pipes, which can be difficult with ultrasonic tools. As shown in Figure 14.12, magnetic flux is induced into the pipe wall between two magnets. Any metal loss that occurs in the wall results in the flux lines being distorted, and this distortion is sensed by a detector that generates an electrical signal, indicating a loss. A sensor records the magnetic flux leakage across the pipe wall to detect any defects or reduction in pipe wall thickness. Figure 14.13 explains the principle of magnetic flux pig operation.

The ultrasonic pig is another type of intelligent pig that detects metal loss. Its principle of operation is shown in Figures 14.14 and 14.15 show a typical ultrasonic inspection tool. The ultrasonic inspection pig can only be used in homogeneous

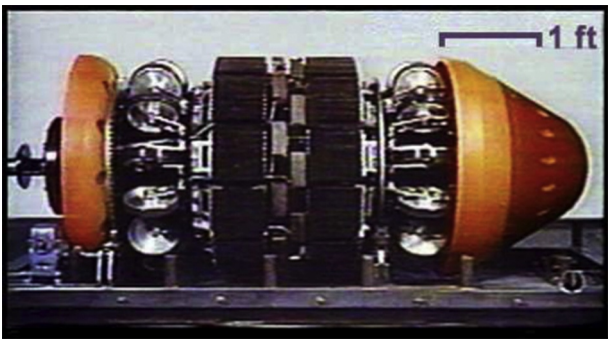

Figure 14.11 Typical intelligent pig.

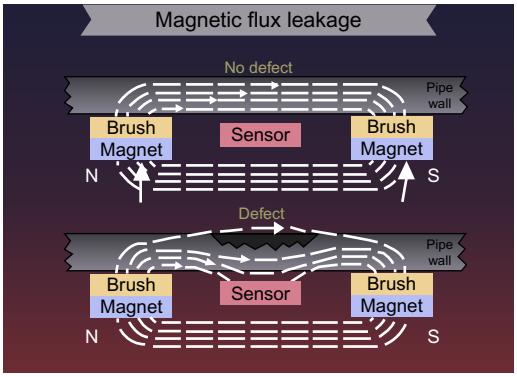

Figure 14.12 Schematic of a magnetic flux inspection tool.

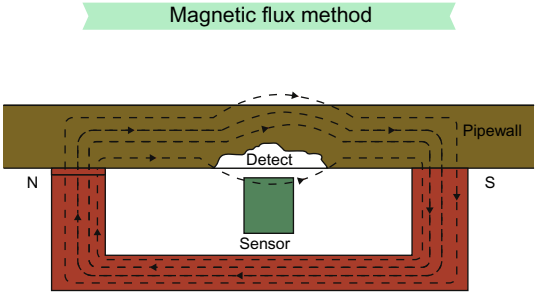

Figure 14.13 Principle of magnetic flux pig operation.

liquids. They are capable of measuring much heavier wall thicknesses than is possible with some of the magnetic flux pigs. Ultrasonic transducers transmit signals from both the internal and external surfaces of the pipe and convert them into digital data to detect any anomalies. The ultrasonic technique is based on the direct measurement of the remaining wall thickness. The ultrasonic tool uses the principle of ultrasonic waves traveling in a liquid medium. In order to inspect a gas pipeline, the tool needs to be in a liquid slug with seal pigs in front of and behind the tools and with a homogenous liquid in between. Since they are a noncontact system, they lend themselves more easily to bidirectional use. They are useful to inspect offshore loading/unloading pipelines where it is difficult to provide a receiving facility at the end.

14.3.4 Pipeline leak detection

Leak detection is often required under pipeline safety codes to

- assure safety in operations,
- protect the environment,
- avoid the loss of transported product,
- minimize third party damage,
- minimize loss or damage to the pipeline users.

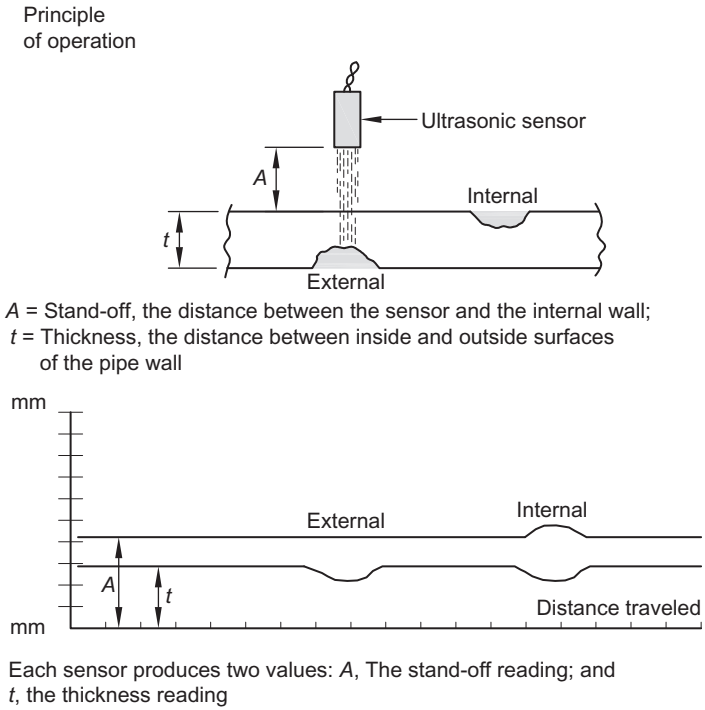

Figure 14.14 Ultrasonic principle of operation.

Figure 14.15 Typical ultrasonic inspection tool.

Traditionally, leak detection has been performed by visual inspection of the pipeline. This was done either by traversing the pipeline route on the ground or by surveying the route with low-flying light aircraft. While aerial inspections are still conducted, instrumentation and monitoring equipment are also used for rapid and precise location of leaks and potential leaks. These methods rely on monitoring and analysis or pipeline flow and pressure changes or pressure transients using simulated computer software.

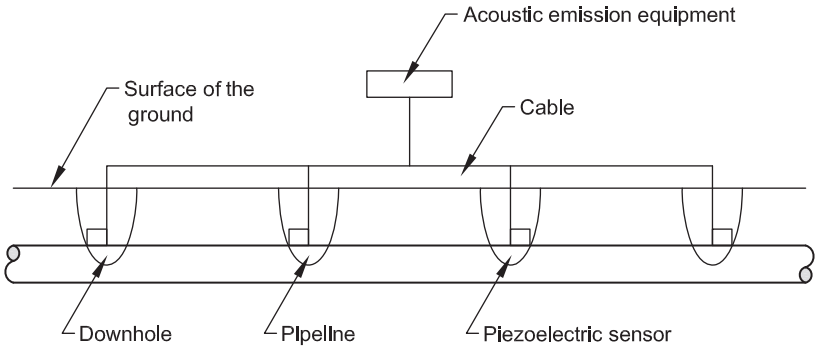

Figure 14.16 Schematic illustrating acoustic emission equipment.

To detect and locate small leaks, ultrasonic or acoustic methods are used. Acoustic method relies on the noise generated by fluid flow through a leak in a pressurized pipeline for its detection. Figure 14.16 is a schematic showing acoustic emission equipment. Instrumented pigs are also used to monitor pipelines for leaks. It is important to note that the presence of a leak detection system does not provide assurance that a leak will not occur. However, it will warn that a leak has occurred, which reduces the time between failure and remedial action that can be initiated.

14.4 Pipeline emergencies and repairs

Operation always strives to maintain a pipeline that is free of leaks and potential defects and not a risk to life, property, and the environment. Despite everyone's best efforts, there are occasions where a pipeline leaks or ruptures and releases flammable and/or toxic fluids. This requires the introduction of emergency procedures, followed by temporary and then permanent repairs.

14.4.1 Emergency procedures

In the event of a failure, emergency procedures have been developed to

- reduce the potential risks to personnel and the general public,
- minimize asset loss,
- prevent or minimize pollution or environmental damage.

Emergency procedures cover

- pipeline shutdown,
- leak detection,
- organizational procedures,
- notification of authorities,
- safety,
- emergency and permanent repairs,
- recommissioning or start-up.

14.4.2 Temporary repairs

A temporary repair is made immediately after a rupture or a leak has occurred. The primary purpose is to correct the problem and maintain flow within the pipeline, at reduced pressures, if necessary, until permanent repair work can be carried out. There are a variety of clamps that are used to make a temporary repair. Figure 14.17 shows how a typical clamp is used in a temporary repair. These clamps are designed to reestablish the pressure-holding capability of the pipeline. Some examples of commercially available clamps are referred as Plidco, Hydrotech, and Gripper. Figure 14.18 shows the Plidco clamp.

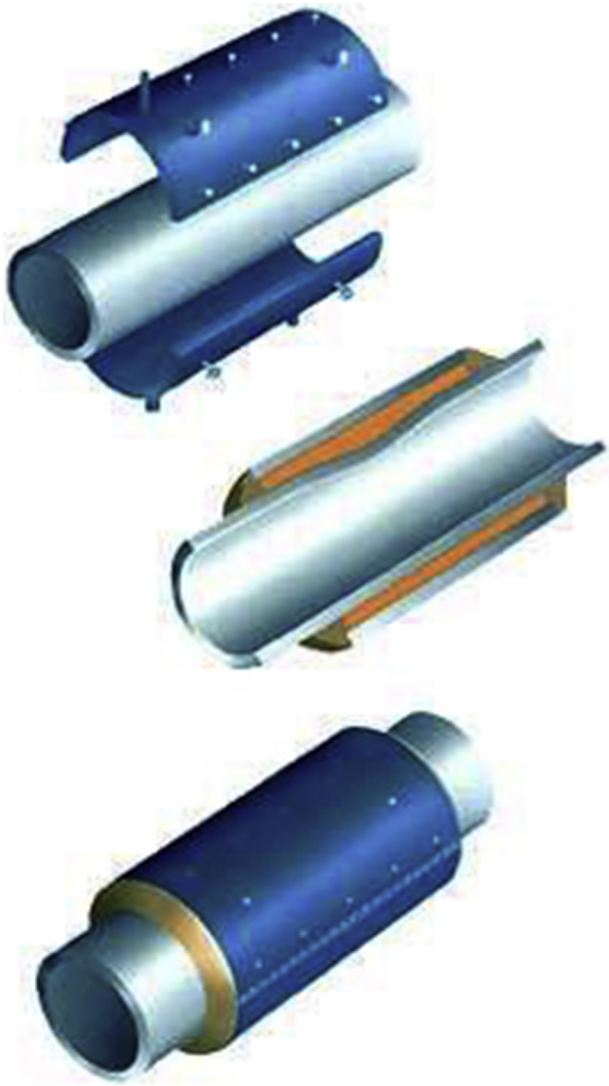

Figure 14.17 Illustration showing how clamps are used for a temporary pipeline repair.

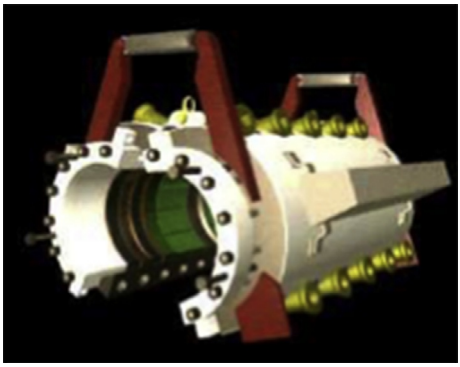

Figure 14.18 Plidco clamp used in temporary pipeline repairs.

14.4.3 Permanent repairs

A permanent pipeline repair may be carried out, while the pipeline is in-service or may require a shutdown. In-service repairs are usually carried out by welding full encirclement split sleeves over the defective section of the pipe. Figure 14.19 shows a typical onshore permanent repair, while Figure 14.20 shows a typical offshore permanent repair. This method is only suitable for external damage or defects. For internal defects, for example, caused by corrosion, split sleeves are used as a temporary repair.

14.4.4 Major repairs

A major repair requires the operations to be shutdown and depressurization of the pipeline and evacuation and purging of the pipeline section to be repaired. The products in the pipeline should be evacuated using one or more of the following: gravity flow, suction from low points, or purging of the line by inert gas, air, or water. The method selected depends on the pipeline profile, accessibility, volume, and properties of the transport fluid, environmental conditions, logistics, and cost of the replacing medium. Onshore pipeline repairs usually require evacuation of the affected section. Figure 14.20 shows an excavation for repair. The two most commonly used techniques for permanent pipeline repair are plug and bypass technique and frozen plug technique. Pipe deformation and other damages, such as buckles, dents, cracks, and corrosion holes, are usually repaired by replacing the damaged section by welding in a new section. Sometimes bolted clamps are used for low-pressure lines.

Repairs made to offshore platforms are made by attaching a new section to the pipeline by hyperbaric welding or by using mechanical connectors. In shallow waters, the damaged section is cut out at the seabed, and both pipe ends are lifted. A new pipe section is welded in place and the line is laid back on the seabed.

Major pipeline repairs involve careful planning to limit potential risks and minimize loss of production. Figure 14.21 shows a major onshore pipeline repair.

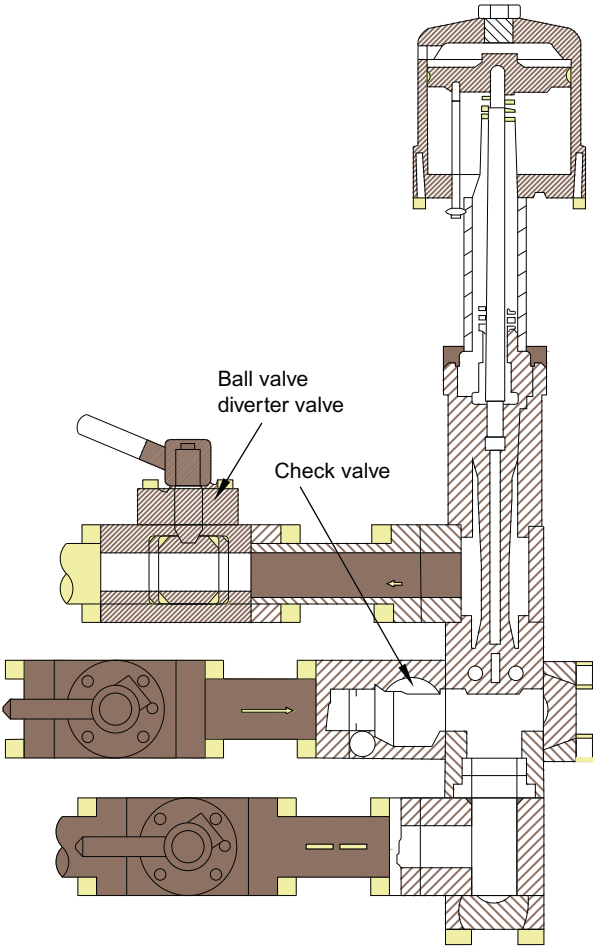

Figure 14.19 Typical permanent external repair to an onshore pipeline.

Figure 14.20 Excavation for a pipeline repair.

Figure 14.21 Typical permanent external repair to an offshore pipeline.

Further Reading

[1] M. Frankel, Facility Piping Systems Handbook, McGraw Hill, Inc., ISBN 0-07-021891-9, 1996.
[2] Pipe Fitters Handbook, Grinnell Supply Sales Company, 1966.
[3] M.L. Nayyar, Piping Handbook, McGraw-Hill, Inc., ISBN 0-07-046881-8, October 1, 2007.
[4] NAVCO Piping Datalog, National Valve and Manufacturing Company, Pittsburgh, PA, 1986.
[5] E. Avallone, T. Baumeister, Marks' Standard Handbook for Mechanical Engineers, McGraw-Hill, ISBN 0-07-004123-7, 2006.
[6] Codes and Standards Training Institute (CASTI), ASME Piping Codes, Edmonton, AB, Canada, 2012.
[7] ASME B31.1, Standard for Power Piping, ASME, New York, 2012.
[8] ASME B31.3, Standard for Process Piping, ASME, New York, 2012.
[9] ASME B31.4, Standard for Liquid Transportation Systems for Hydrocarbons, Liquid Petroleum Gas, Anhydrous Ammonia and Alcohols, ASME, New York, 2012.
[10] ASME B31.8, Standard for Gas Transmission and Distribution Piping Systems, ASME, New York, 2012.
[11] API RP 14E, Recommended Practice for the Design and Installation of Offshore Production Platform Systems, API, Washington, DC, 2007.
[12] ASME B16.5, Standard for Steel Pipe Flanges and Flanged Fittings NPS ½ through NPS 24 Metric/Inch, ASME, New York, 2003.
[13] API Specification 6A, Specification for Wellhead and Christmas Tree Equipment, 19th ed., API, Washington, DC, 2004.
[14] ASME B16.11, Standard for Forged Steel Fittings, Socket Welding, and Threaded, ASME, New York, 2012.
[15] NACE MR-01-75, Standard Material Requirements—Metals for Sulfide Stress Cracking and Stress Corrosion Cracking Resistance in Sour Gas Oilfield Equipment for Sulfide Stress Cracking Resistant Metallic Material for Oilfield Equipment, NACE, Houston, 2012, Sections 3 and 5.
[16] ASME, The 2013 ASME Boiler and Pressure Vessel Code, ASME, Fairfield, New Jersey, 2013. Section VIII, IX.

[17] ASME SPEC 6F, Technical Report on Performance of API and ASME End Connections in a Fire Test According to API Specification 6A, third ed., API, Washington, DC, 2012.
[18] ASME SPEC 6FA, Specification for Fire Testing Valves, third ed., API, Washington, DC, 1999.
[19] API RP 14J, Recommended Practice for Design and Hazard Analysis of Offshore Production Facilities, second ed., API, Washington, DC, 2001.
[20] API RP 14C, Recommended Practice for Analysis, Design, Installation, and Testing of Basic Surface Safety Systems for Offshore Production Facilities, seventh ed., API, Washington, DC, 2001.
[21] ASME Standard A53, Standard for Seamless Carbon Steel Pipe for High Temperature Service, ASME, New York, 2002.
[22] ASME Standard A106, Standard for Seamless Carbon Steel Pipe for High Temperature Service, ASME, New York, 2002.
[23] API Standard 5L, Specification for Line Pipe, 19th ed., API, Washington, DC, 2004.
[24] ASME Standard B16.9, Standard for Factory Made Wrought Steel Butt-Welding Fittings, ASME, New York, 2013.
[25] ASME Standard A105, Standard for Carbon Steel Forgings for Piping Applications, ASME, New York, 2012.
[26] ASME Standard A234, Standard Specification for Pipe Fittings of Wrought Iron Carbon Steel and Alloy Steel for Moderate and Elevated Temperatures, ASME, New York, 2012.
[27] ASME Standard A420, Standard Specification for Pipe Fittings of Wrought Carbon Steel and Alloy Steel for Low Temperature Service, ASME, New York, 2012.
[28] ASME Standard A694, Carbon and Alloy Steel for Pipe Flanges, Fittings, Valves and Parts for High Pressure Transmission Services, ASME, New York, 1998.
[29] API Standard 6D, Standard Specification for Steel Gate, Plug and Check Valves for Pipeline Service, API, Washington, DC, 1998.
[30] API Standard 6H, Standard Specification for End Closures, Connections, and Swivels, API, Washington, DC, 1998.
[31] MSS Specification 44, Specification for Steel Pipeline Flanges, Manufacturer's Standardization Society of the Valves and Fittings Industry Inc., Vienna, Virginia, 1998.
[32] MSS Specification 75, Specification for High Test Wrought Butt Welding Fittings, Manufacturer's Standardization Society of the Valves and Fittings Industry Inc., Vienna, Virginia, 1998.
[33] NACE Standard MR01-76, Standard Specification for Metallic Materials for Sucker Rod Pumps for Corrosive Oilfield Environments, NACE, Houston, 2000.
[34] NACE RP 200, Recommended Practice for Steel Cased Pipeline Practices, NACE, Houston, 2003.
[35] NACE RP 572, Recommended Practice for Design, Installation, Operation, and Maintenance of Impressed Current Deep Ground Beds, NACE, Houston, 2003. Sections 3 and 5.
[36] API Standard 1104, Standard Specification for Welding of Pipelines and Related Facilities, 19th ed., API, Washington, DC, 1999.
[37] API Standard 571, Standard Specification for Piping Code-Inspection, Repair, Alteration and Re-Rating of In-Service Piping Systems, second ed., API, Washington, DC, 1999.
[38] API Standard 574, Standard Specification for Inspection Practices for Piping System Components, second ed., API, Washington, DC, 1999.
[39] B. Wilson, Detail Engineering and Layout of Piping Systems, second ed., 2010. Titles on Demand, June 2011, ISBN 928-1-926633-18-3.

[40] A. Parisher Roy, A. Rhea Bobert, Pipe Drafting and Design, third ed., Gulf Professional Publishing, Houston, Texas, 2012.
[41] Charles Becht IV, Process Piping: The Complete Guide to ASME B31.3, third ed., ASME Press, New York, 2009.
[42] D.R. Sherwood, J. Whistance Dennis, The Piping Guide, Syentek Book Company, San Francisco, CA, 1991.
[43] Piping Engineering, sixth ed., Tube Turns Inc., 1986.
[44] L.-C. Peng, T.-L. Peng (Alvin), Pipe Stress Engineering, ASME Press, New York, 2009.
[45] B. Silowash, Piping Systems Manual, McGraw Hill, New York, NY, 2010.
[46] Control Valve Handbook, Fisher-Rosemount, 1999.

Appendix 1

Material Properties of Some Common Piping Materials

Material	Density	Coefficient of Linear Expansion at 70°F	Young's Modulus at 70°F	Tensile Strength	Yield Strength	Specific Heat	Thermal Conductivity
	lb/in^3	in/in/70°F	psi	ksi	ksi	BTU/lb/°F	BTU in/ ft^2 hr °F
ABS	0.037	60×10^{-6}	0.340×10^6	7.0	—	0.34	1.35
Aluminum	0.093	12.3×10^{-6}	10.0×10^6	13 to 42	4.5 to 35	0.225	1140
Cast Iron	0.26	6.2×10^{-6}	13.4×10^6	20 to 60	—	0.10	312
Copper	0.323	9.3×10^{-6}	17.0×10^6	30 to 50	9 to 40	0.094	2700
Ductile Iron	0.26	5.7×10^{-6}	24×10^6	60 to 70	40 to 50	0.11	250
HDPE	0.035	100×10^{-6}	0.130×10^6	3.2	—	0.54	2.7
PEX	0.034	90×10^{-6}	0.123×10^6	2.8	—	0.55	3.2
PVC	0.053	30×10^{-6}	0.410×10^6	8.0	—	0.25	1.1
PVDF	0.064	70×10^{-6}	0.220×10^6	7.0	—	0.29	1.5
Reinforced Concrete	0.078	5.5×10^{-6}	4.4×10^6	—	—	0.21	—
Stainless	0.277	8.5×10^{-6}	28.3×10^6	75 to 80	30 to 35	0.109	120
Steel	0.2816	6.4×10^{-6}	29.5×10^6	48 to 70	30 to 40	0.102	360
Titanium	0.1278	4.6×10^{-6}	15.5×10^6	35 to 70	25 to 55	0.13	120

Appendix 2

PVC Pipe Schedules

Nominal Pipe Size	DN	Outside Diameter	Schedule	Min Wall Thickness	Avg Inside Diameter	Row Area	Flow Area	Nom. Wt./Ft.	Max. Working Pressure at 73°F
in	mm	in		in	in	in^2	ft^2	lb/ft	PSI
1/8	6	0.405	40	0.068	0.249	0.049	0.000338	0.051	810
		0.405	80	0.095	0.195	0.030	0.000207	0.063	1230
1/4	8	0.540	40	0.088	0.344	0.093	0.000645	0.086	780
		0.540	80	0.119	0.282	0.062	0.000434	0.105	1130
3/8	10	0.675	40	0.091	0.473	0.176	0.001220	0.115	620
		0.675	80	0.126	0.403	0.128	0.000886	0.146	920
1/2	15	0.840	40	0.109	0.602	0.285	0.001977	0.170	600
		0.840	80	0.147	0.526	0.217	0.001509	0.213	850
		0.840	120	0.170	0.480	0.181	0.001257	0.236	1010
3/4	20	1.050	40	0.113	0.804	0.508	0.003526	0.226	480
		1.050	80	0.154	0.722	0.409	0.002843	0.289	690
		1.050	120	0.170	0.690	0.374	0.002597	0.311	770
1	25	1.315	40	0.133	1.029	0.832	0.005775	0.333	450
		1.315	80	0.179	0.936	0.688	0.004778	0.424	630
		1.315	120	0.200	0.891	0.624	0.004330	0.464	720
1 1/4	32	1.660	40	0.140	1.360	1.453	0.010088	0.450	370
		1.660	80	0.191	1.255	1.237	0.008590	0.586	520
		1.660	120	0.215	1.204	1.139	0.007906	0.649	600
1 1/2	40	1.900	40	0.145	1.590	1.986	0.013789	0.537	330
		1.900	80	0.200	1.476	1.711	0.011882	0.711	470
		1.900	120	0.225	1.423	1.590	0.011044	0.787	540
2	50	2.375	40	0.154	2.047	3.291	0.022854	0.720	280
		2.375	80	0.218	1.913	2.874	0.019960	0.984	400
		2.375	120	0.250	1.845	2.674	0.018566	**1.111**	470
2 1/2	65	2.875	40	0.203	2.445	4.695	0.032605	1.136	300
		2.875	80	0.276	2.290	4.119	0.028602	1.500	420
		2.875	120	0.300	2.239	3.937	0.027342	1.615	470
3	80	3.500	40	0.216	3.042	7.268	0.050471	1.488	260
		3.500	80	0.300	2.864	6.442	0.044738	2.010	370
		3.500	120	0.350	2.758	5.974	0.041487	2.306	440
3 1/2	90	4.000	40	0.226	3.521	9.737	0.067617	1.789	240
		4.000	80	0.318	3.326	8.688	0.060335	2.452	350
4	100	4.500	40	0.237	3.998	12.554	0.087179	2.118	220
		4.500	80	0.337	3.786	11.258	0.078179	2.938	320
		4.500	120	0.437	3.574	10.032	0.069668	3.713	430
5	125	5.563	40	0.258	5.016	19.761	0.137228	2.874	190
		5.563	80	0.375	4.768	17.855	0.123994	4.078	290
6	150	6.625	40	0.280	6.031	28.567	0.198384	3.733	180
		6.625	80	0.432	5.709	25.598	0.177765	5.610	280
		6.625	120	0.562	5.434	23.191	0.161052	7.132	370
8	200	8.625	40	0.322	7.942	49.539	0.344022	5.619	160
		8.625	80	0.500	7.565	44.948	0.312137	8.522	250
		8.625	120	0.718	7.189	40.591	0.281880	11.277	380
10	250	10.750	40	0.365	9.976	78.163	0.542800	7.966	140
		10.750	80	0.593	9.493	70.778	0.491512	12.635	230
12	300	12.750	40	0.406	11.889	111.015	0.770935	10.534	130
		12.750	80	0.687	11.294	100.181	0.695701	17.384	230
14	350	14.000	40	0.437	13.073	134.227	0.932132	12.462	130
		14.000	80	0.750	12.410	120.958	0.839983	20.852	220
16	400	16.000	40	0.500	14.940	175.304	1.217386	16.286	130
		16.000	80	0.843	14.213	158.658	1.101789	26.810	220
18	450	18.000	40	0.562	16.809	221.908	1.541029	20.587	130
		18.000	80	0.937	16.014	201.414	1.398707	33.544	220
20	500	20.000	40	0.593	18.743	275.910	1.916043	24.183	120
		20.000	80	1.031	17.814	249.237	1.730812	41.047	220
24	600	24.000	40	0.687	22.544	399.164	2.771973	33.652	120
		24.000	80	1.218	21.418	360.286	2.501986	58.233	210

Appendices 3A–3G

Appendix 3A: USA Department of Transportation Gas Pipeline Class Location Regulation

Includes the exact DOT rule language followed by interpretation.

e-CFR Data current as of September 6, 2013

Title 49: Transportation
PART 192—TRANSPORTATION OF NATURAL AND OTHER GAS BY PIPELINE: MINIMUM FEDERAL SAFETY STANDARDS
Subpart A—General

§ 192.5 Class locations.

(a) This section classifies pipeline locations for purposes of this part. The following criteria apply to classifications under this section.

(1) A “class location unit” is an onshore area that extends 220 yards (200 meters) on either side of the centerline of any continuous 1- mile (1.6 kilometers) length of pipeline.

(2) Each separate dwelling unit in a multiple dwelling unit building is counted as a separate building intended for human occupancy.

(b) Except as provided in paragraph (c) of this section, pipeline locations are classified as follows:

(1) A Class 1 location is:

(i) An offshore area; or

(ii) Any class location unit that has 10 or fewer buildings intended for human occupancy.

(2) A Class 2 location is any class location unit that has more than 10 but fewer than 46 buildings intended for human occupancy.

(3) A Class 3 location is:

(i) Any class location unit that has 46 or more buildings intended for human occupancy; or

(ii) An area where the pipeline lies within 100 yards (91 meters) of either a building or a small, well-defined outside area (such as a playground, recreation area, outdoor theater, or other place of public assembly) that is occupied by 20 or more persons on at least 5 days a week for 10 weeks in any 12-month period. (The days and weeks need not be consecutive.)

(4) A Class 4 location is any class location unit where buildings with four or more stories above ground are prevalent.

(c) The length of Class locations 2, 3, and 4 may be adjusted as follows:

(1) A Class 4 location ends 220 yards (200 meters) from the nearest building with four or more stories above ground.

(2) When a cluster of buildings intended for human occupancy requires a Class 2 or 3 location, the class location ends 220 yards (200 meters) from the nearest building in the cluster.

[Amdt. 192-78, 61 FR 28783, June 6, 1996; 61 FR 35139, July 5, 1996, as amended by Amdt. 192-85, 63 FR 37502, July 13, 1998]

— Interpretation— US Department of Transportation (USDOT) Pipeline Class Location Rule

- **Class location unit**
  - Defined as the **area** that extends **220 yards on either side** of the **center line** of any **continuous one mile length** of pipeline
  - **Each** separate **dwelling unit** in a **multiple dwelling unit** building is **counted** as a **separate building** for human occupancy
- **Classes of locations**
  - **Class 1 location**
    - Areas that contain **10 or less buildings** intended for human occupancy
  - **Class 2 location**
    - Areas where there are **more than 10 but less than 46** buildings intended for human occupancy
  - **Class 3 location**
    - Areas where there are **46 or more** buildings intended for human occupancy or
    - Areas where the **pipeline lies within 100 yards** of a **building** that is **occupied** by **20 or more persons** on **at least 5 days a week** for **10 weeks** in any **12 month** period, or
  - **Class 3 location**
    - **Small, well-defined** outside area that is occupied by **20 or more** persons during **normal use,** such as a playground, recreation area, outdoor theater, or other place of public assembly
  - **Class 4 location**
    - Areas where **buildings** with **four or more stories above ground** are present
- **Class boundaries**
  - When a **cluster of buildings** intended for human occupancy **required a Class 2 or Class 3 location,** the **location ends 220 yards** from the **nearest building** in the cluster
  - A Class 4 location **ends 220 yards** from the **nearest building** with **four or more stories above ground**

Appendix 3A, Class Location Rule Interpretation, cont'd–

➢ Exceptions

- A **design factor** of **0.60 or less** must be **used** in the design equation for **steel pipe** in **Class 1 location** that:
- Crosses the **right-of-way** of an **unimproved public road,** without a casing
- Crosses **without a casing,** or makes a **parallel encroachment** on, the **right-of-way** of either a **hard surfaced** road, a highway, a public street, or a railroad
- Is **supported** by a **vehicular, pedestrian, railroad, or pipeline bridge;** or
- Is **used** in a **fabricated assembly,** (including separators, mainline valve assemblies, cross-connections, and river crossing headers) or is **used within five pipe diameters** in **any direction** from the **last fitting** of a **fabricated assembly,** other than a transition piece of an elbow used in place of a pipe bend which is not associated with a fabricated assembly
- For **Class 2 locations,** a design factor of **0.50 or less** must be **used** in the design equation for **uncased steel pipe** that **crosses** the **right-of-way** of a **hard surfaced road,** a highway, a public street, or a railroad
- For **Class 1 and Class 2 locations,** a design factor of **0.50 or less** must be **used** in the design equation for
  - Steel pipe in a **compressor station, regulating station, or measuring station;** and
  - **Steel pipe,** including a pipe riser, on a **platform located offshore** or in **inland navigable waters**

➢ Summary of USDOT pipeline design factors —

Table 3A-1: US Department of Transportation Design Factors	
Class Location	**Design Factor (F)**
1	0.72
2	0.60
3	0.50
4	0.40

Compare with Location Class rule in ASME B31.8.

Appendix 3B — Table 3B-1: Examples of Allowable Stresses for Reference Use with B31.4 Piping Systems

Pipe Material Specification	Grade	Specified Min. Yield Strength [psi (MPa)]	Weld Joint Factor (*E*)	Allowable Stress Value, *S* [−20°F to 250°F (−30°C to 120°C) , psi (MPa)]
Seamless				
API 5L	A25	25,000 (172)	1.00	18,000 (124)
API 5L, ASTM A 53, ASTM A 106	A	30,000 (207)	1.00	21,600 (149)
API 5L, ASTM A 53, ASTM A 106	B	35,000 (241)	1.00	25,200 (174)
API 5L	X42	42,000 (289)	1.00	30,250 (208)
API 5L	X46	46,000 (317)	1.00	33,100 (228)
API 5L	X52	52,000 (358)	1.00	37,450 (258)
API 5L	X56	56,000 (386)	1.00	40,300 (278)
API 5L	X60	60,000 (413)	1.00	43,200 (298)
API 5L	X65	65,000 (448)	1.00	46,800 (323)
API 5L	X70	70,000 (482)	1.00	50,400 (347)
API 5L	X80	80,000 (551)	1.00	57,600 (397)
ASTM A 106	C	40,000 (278)	1.00	28,800 (199)
ASTM A 333	6	35,000 (241)	1.00	25,200 (174)
ASTM A 524	I	35,000 (241)	1.00	25,200 (174)
ASTM A 524	H	30,000 (207)	1.00	21,600 (149)
Furnace Butt Welded, Continuous Welded				
ASTM A 53	. . .	25,000 (172)	0.60	10,800 (74)
API 5L Classes I and II	A25	25,000 (172)	0.60	10,800 (74)
Electric Resistance Welded and Electric Flash Welded				
API 5L	A25	25,000 (172)	1.00	18,000 (124)
API 5L, ASTM A 53, ASTM A 135	A	30,000 (207)	1.00	21,600 (149)
API 5L, ASTM A 53, ASTM A 135	B	35,000 (241)	1.00	25,200 (174)
API 5L	X42	42,000 (289)	1.00	30,250 (208)
API 5L	X46	46,000 (317)	1.00	33,100 (228)

Tabulated Examples of Allowable Stresses, continued …

Pipe Material Specification	Grade	Specified Min. Yield Strength [psi (MPa)]	Weld Joint Factor (*E*)	Allowable Stress Value, *S* [−20°F to 250°F (−30°C to 120°C) , psi (MPa)]
Electric Resistance Welded and Electric Flash Welded, continued …				
API 5L	X52	52,000 (358)	1.00	37,450 (258)
API 5L	X56	56,000 (386)	1.00	40,300 (279)
API 5L	X60	60,000 (413)	1.00	43,200 (297)
API 5L	X65	65,000 (448)	1.00	46,800 (323)
API 5L	X70	70,000 (482)	1.00	50,400 (347)
API 5L	X80	80,000 (551)	1.00	57,600 (397)
ASTM A 333	6	35,000 (241)	1.00	25,000 (174)
Electric Fusion Welded				
ASTM A134	. . .	. . .	0.80	. . .
ASTM A 139	A	30,000 (207)	0.80	17,300 (119)
ASTM A 139	B	35,000 (241)	0.80	20,150 (139)
ASTM A 671	. . .	Note (1)	1.00	. . .
		[Notes (2), (3)]		
ASTM A671	. . .	Note(1)	0.70	. . .
		[Note(4)]		
ASTM A 672	. . .	Note (1)	1.00	. . .
		[Notes (2), (3)]		
ASTM A672	. . .	Note(1)	0.80	. . .
		[Note(4)]		
Submerged Arc Welded				
API 5L	A	30,000 (207)	1.00	21,600 (149)
API 5L	B	35,000 (241)	1.00	25,200 (174)
API 5L	X42	42,000 (289)	1.00	30,250 (208)
API 5L	X46	46,000 (317)	1.00	33,100 (228)
API 5L	X52	52,000 (358)	1.00	37,450 (258)
API 5L	X56	56,000 (386)	1.00	40,300 (278)
API 5L	X60	60,000 (413)	1.00	43,200 (298)

Tabulated Examples of Allowable Stresses, continued …

Pipe Material Specification	Grade	Specified Min. Yield Strength [psi (MPa)]	Weld Joint Factor (*E*)	Allowable Stress Value, *S* [−20°F to 250°F (−30°C to 120°C) , psi (MPa)]
Submerged Arc Welded, continued …				
API 5L	X65	65,000 (448)	1.00	46,800 (323)
API 5L	X70	70,000 (482)	1.00	50,400 (347)
API 5L	X80	80,000 (551)	1.00	57,600 (397)
ASTM A 381	Y35	35,000 (241)	1.00	25,200 (174)
ASTM A 381	Y42	42,000 (290)	1.00	30,250 (209)
ASTM A 381	Y46	46,000 (317)	1.00	33,100 (228)
ASTM A 381	Y48	48,000 (331)	1.00	34,550 (238)
ASTM A 381	Y50	50,000 (345)	1.00	36,000 (248)
ASTM A 381	Y52	52,000 (358)	1.00	37,450 (258)
ASTM A 381	Y60	60,000 (413)	1.00	43,200 (298)
ASTM A 381	Y65	65,000 (448)	1.00	46,800 (323)

GENERAL NOTES:

(a) Allowable stress values, S, shown in this Table are equal to 0.72*E* (weld joint factor) x specified minimum yield strength of the pipe.

(b) Allowable stress values shown are for new pipe of known specification. Allowable stress values for new pipe of unknown specification, ASTM A 120 specification, or used (reclaimed) pipe shall be determined in accordance with ¶402.3.1.

(c) For some Code computations, particularly with regard to branch connections [see ¶404.3.1(d)(3)] and expansion, flexibility, structural attachments, supports, and restraints (Chapter II, Part 5), the weld joint factor *E* need not be considered.

(d) For specified minimum yield strength of other grades in approved specifications, refer to that particular specification.

(e) Allowable stress value for cold worked pipe subsequently heated to 600°F (300°C) or higher (welding excepted) shall be 75% of the value listed in Table.

(f) Definitions for the various types of pipe are given in ¶400.2.

(g) Metric stress levels are given in MPa (1 megapascal p 1 million pascals).

NOTES:

(1) See applicable plate specification for yield point and refer to para. 402.3.1 for calculation of *S*.

(2) Factor applies for Classes 12, 22, 32, 42, and 52 only.

(3) Radiography must be performed after heat treatment.

(4) Factor applies for Classes 13, 23, 33, 43, and 53 only.

Source — ASME B31.4, Table 402.3.1(a)

Appendix 3C: Pipe Dimensions — NPS, Thickness and Weight

Table 3C-1: NPS, Pipe Schedule and Pipe Wall Thickness (inches)

NPS	DO (OD, in.)	Nominal Pipe Wall Thickness ($t_{Nominal}$, in inches) for Each Pipe Schedule (Column Heads) — Cells with YELLOW highlight are SS. All others are CS.																	
		5S	5	10S	10	20	30	40S	40	STD	60	80S	80	XS (XH)	100	120	140	160	XXS (XXH)
1/8	0.405	(1)		0.049 (1)	0.049		0.057	0.068	0.068	0.068		0.095	0.095	0.095					
1/4	0.540	(1)		0.065 (1)	0.065		0.073	0.088	0.088	0.088		0.119	0.119	0.119					
3/8	0.675	(1)		0.065 (1)	0.065		0.073	0.091	0.091	0.091		0.126	0.126	0.126					
1/2	0.840	0.065 (1)	0.065	0.083 (1)	0.083		0.095	0.109	0.109	0.109		0.147	0.147	0.147				0.188	0.294
3/4	1.050	0.065 (1)	0.065	0.083 (1)	0.083		0.095	0.113	0.113	0.113		0.154	0.154	0.154				0.219	0.308
1	1.315	0.065 (1)	0.065	0.109 (1)	0.109		0.114	0.133	0.133	0.133		0.179	0.179	0.179				0.250	0.358
1 1/4	1.660	0.065 (1)	0.065	0.109 (1)	0.109		0.117	0.140	0.140	0.140		0.191	0.191	0.191				0.250	0.382
1 1/2	1.900	0.065 (1)	0.065	0.109 (1)	0.109		0.125	0.145	0.145	0.145		0.200	0.200	0.200				0.281	0.400
2	2.375	0.065 (1)	0.065	0.109 (1)	0.109		0.125	0.154	0.154	0.154		0.218	0.218	0.218				0.344	0.436
2 1/2	2.875	0.083 (1)	0.083	0.120 (1)	0.120		0.188	0.203	0.203	0.203		0.276	0.276	0.276				0.375	0.552
3	3.500	0.083 (1)	0.083	0.120 (1)	0.120		0.188	0.216	0.216	0.216		0.300	0.300	0.300				0.438	0.600
3 1/2	4.000	0.083 (1)	0.083	0.120 (1)	0.120		0.188	0.226	0.226	0.226		0.318	0.318	0.318					
4	4.500	0.083 (1)	0.083	0.120 (1)	0.120		0.188	0.237	0.237	0.237		0.337	0.337	0.337		0.438		0.531	0.674
5	5.563	0.109 (1)	0.109	0.134 (1)	0.134			0.258	0.258	0.258		0.375	0.375	0.375		0.500		0.625	0.750
6	6.625	0.109 (1)	0.109	0.134 (1)	0.134			0.280	0.280	0.280		0.432	0.432	0.432		0.562		0.719	0.864
8	8.625	0.109 (1)	0.109	0.148 (1)	0.148	0.250	0.277	0.322	0.322	0.322	0.406	0.500	0.500	0.500	0.594	0.719	0.812	0.906	0.875
10	10.750	0.134 (1)	0.134	0.165 (1)	0.165	0.250	0.307	0.365	0.365	0.365	0.500	0.500 (2)	0.594	0.500	0.719	0.844	1.000	1.125	1.000
12	12.750	0.156 (1)	0.156	0.180 (1)	0.180	0.250	0.330	0.375 (2)	0.406	0.375	0.562	0.500 (2)	0.688	0.500	0.844	1.000	1.125	1.312	1.000
14	14.000	0.156 (1)	0.156	0.188 (1), (2)	0.250	0.312	0.375	0.375 (2)	0.438	0.375	0.594	0.500 (2)	0.750	0.500	0.938	1.094	1.250	1.406	
16	16.000	0.165 (1)	0.165	0.188 (1), (2)	0.250	0.312	0.375	0.375 (2)	0.500	0.375	0.656	0.500 (2)	0.844	0.500	1.031	1.219	1.438	1.594	
18	18.000	0.165 (1)	0.165	0.188 (1), (2)	0.250	0.312	0.438	0.375 (2)	0.562	0.375	0.750	0.500 (2)	0.938	0.500	1.156	1.375	1.562	1.781	
20	20.000	0.188 (1)	0.188	0.218 (1), (2)	0.250	0.375	0.500	0.375 (2)	0.594	0.375	0.812	0.500 (2)	1.031	0.500	1.281	1.500	1.750	1.969	
22	22.000	0.188 (1)	0.188	0.218 (1), (2)	0.250	0.375	0.500			0.375	0.875		1.125	0.500	1.375	1.625	1.875	2.125	
24	24.000	0.218 (1)	0.218	0.250 (1)	0.250	0.375	0.562	0.375 (2)	0.688	0.375	0.969	0.500 (2)	1.219	0.500	1.531	1.812	2.062	2.344	
26	26.000				0.312	0.500				0.375				0.500					
28	28.000				0.312	0.500	0.625			0.375				0.500					
30	30.000	0.250 (1)	0.250	0.312 (1)	0.312	0.500	0.625			0.375				0.500					
32	32.000				0.312	0.500	0.625		0.688	0.375				0.500					
34	34.000				0.312	0.500	0.625		0.688	0.375				0.500					
36	36.000				0.312	0.500	0.625		0.750	0.375				0.500					
38	38.000									0.375				0.500					
40	40.000									0.375				0.500					
42	42.000									0.375				0.500					
44	44.000									0.375				0.500					
46	46.000									0.375				0.500					
48	48.000									0.375				0.500					

Notes — (1) These wall thicknesses (which all apply to Stainless Steel tubulars in this table) do not permit threading in accord with ASME B1.20.1.
(2) These dimensions do not conform to ASME B36.10M.
(3) Cells in Yellow highlight are stainless steel. All others are carbon steel.

Sources — Table combines information from both ASME B36.10M-2004 and ASME B36.19M-2004.

Table 3C-2: NPS, Pipe Schedule and Inside Diameter (ID, d, inches)

NPS	DO (OD, in.)	Pipe Inside Diameter (ID, d, in inches) for Each Pipe Schedule (Column Heads) — Cells with YELLOW highlight are SS. All others are CS.																	
		5S	5	10S	10	20	30	40S	40	STD	60	80S	80	XS (XH)	100	120	140	160	XXS (XXH)
1/8	0.405			0.307	0.307		0.291	0.269	0.269	0.269		0.215	0.215	0.215					
1/4	0.540			0.410	0.410		0.394	0.364	0.364	0.364		0.302	0.302	0.302					
3/8	0.675			0.545	0.545		0.529	0.493	0.493	0.493		0.423	0.423	0.423					
1/2	0.840	0.710	0.710	0.674	0.674		0.650	0.622	0.622	0.622		0.546	0.546	0.546				0.464	0.252
3/4	1.050	0.920	0.920	0.884	0.884		0.860	0.824	0.824	0.824		0.742	0.742	0.742				0.612	0.434
1	1.315	1.185	1.185	1.097	1.097		1.087	1.049	1.049	1.049		0.957	0.957	0.957				0.815	0.599
1 1/4	1.660	1.530	1.530	1.442	1.442		1.426	1.380	1.380	1.380		1.278	1.278	1.278				1.160	0.896
1 1/2	1.900	1.770	1.770	1.682	1.682		1.650	1.610	1.610	1.610		1.500	1.500	1.500				1.338	1.100
2	2.375	2.245	2.245	2.157	2.157		2.125	2.067	2.067	2.067		1.939	1.939	1.939				1.687	1.503
2 1/2	2.875	2.709	2.709	2.635	2.635		2.499	2.469	2.469	2.469		2.323	2.323	2.323				2.125	1.771
3	3.500	3.334	3.334	3.260	3.260		3.124	3.068	3.068	3.068		2.900	2.900	2.900				2.624	2.300
3 1/2	4.000	3.834	3.834	3.760	3.760		3.624	3.548	3.548	3.548		3.364	3.364	3.364					
4	4.500	4.334	4.334	4.260	4.260		4.124	4.026	4.026	4.026		3.826	3.826	3.826		3.624		3.438	3.152
5	5.563	5.345	5.345	5.295	5.295			5.047	5.047	5.047		4.813	4.813	4.813		4.563		4.313	4.063
6	6.625	6.407	6.407	6.357	6.357			6.065	6.065	6.065		5.761	5.761	5.761		5.501		5.187	4.897
8	8.625	8.407	8.407	8.329	8.329	8.125	8.071	7.981	7.981	7.981	7.813	7.625	7.625	7.625	7.437	7.187	7.001	6.813	6.875
10	10.750	10.482	10.482	10.420	10.420	10.250	10.136	10.020	10.020	10.020	9.750	9.750	9.562	9.750	9.312	9.062	8.750	8.500	8.750
12	12.750	12.438	12.438	12.390	12.390	12.250	12.090	12.000	11.938	12.000	11.626	11.750	11.374	11.750	11.062	10.750	10.500	10.126	10.750
14	14.000	13.688	13.688	13.624	13.500	13.376	13.250	13.250	13.124	13.250	12.812	13.000	12.500	13.000	12.124	11.812	11.500	11.188	
16	16.000	15.670	15.670	15.624	15.500	15.376	15.250	15.250	15.000	15.250	14.688	15.000	14.312	15.000	13.938	13.562	13.124	12.812	
18	18.000	17.670	17.670	17.624	17.500	17.376	17.124	17.250	16.876	17.250	16.500	17.000	16.124	17.000	15.688	15.250	14.876	14.438	
20	20.000	19.624	19.624	19.564	19.500	19.250	19.000	19.250	18.812	19.250	18.376	19.000	17.938	19.000	17.438	17.000	16.500	16.062	
22	22.000	21.624	21.624	21.564	21.500	21.250	21.000			21.250	20.250		19.750	21.000	19.250	18.750	18.250	17.750	
24	24.000	23.564	23.564	23.500	23.500	23.250	22.876	23.250	22.624	23.250	22.062	23.000	21.562	23.000	20.938	20.376	19.876	19.312	
26	26.000				25.376	25.000				25.250				25.000					
28	28.000				27.376	27.000	26.750			27.250				27.000					
30	30.000	29.500	29.500	29.376	29.376	29.000	28.750			29.250				29.000					
32	32.000				31.376	31.000	30.750		30.624	31.250				31.000					
34	34.000				33.376	33.000	32.750		32.624	33.250				33.000					
36	36.000				35.376	35.000	34.750		34.500	35.250				35.000					
38	38.000									37.250				37.000					
40	40.000									39.250				39.000					
42	42.000									41.250				41.000					
44	44.000									43.250				43.000					
46	46.000									45.250				45.000					
48	48.000									47.250				47.000					

Notes — (1) Pipe Inside Diameter (ID, d, in inches) calculated as $d = D_O - 2t$.
(2) See important notes in related Pipe Wall Thickness table.
(3) Cells in Yellow highlight are stainless steel. All others are carbon steel.

Sources — Caculated from information in both ASME B36.10M-2004 and ASME B36.19M-2004.

Table 3C-3: NPS, Pipe Schedule and Pipe Unit Weight (lbm / foot)

NPS	DO (OD, in.)	Calculated[1] Unit Weight (lbm / foot) for Each Pipe Schedule (Column Heads) — Cells with YELLOW highlight are SS. All others are CS.																	
		5S	5	10S	10	20	30	40S	40	STD	60	80S	80	XS (XH)	100	120	140	160	XXS (XXH)
1/8	0.405			0.19	0.19		0.21	0.24	0.24	0.24		0.31	0.31	0.31					
1/4	0.540			0.33	0.33		0.36	0.43	0.43	0.43		0.54	0.54	0.54					
3/8	0.675			0.42	0.42		0.47	0.57	0.57	0.57		0.74	0.74	0.74					
1/2	0.840	0.54	0.54	0.67	0.67		0.76	0.85	0.85	0.85		1.09	1.09	1.09				1.31	1.72
3/4	1.050	0.68	0.68	0.86	0.86		0.97	1.13	1.13	1.13		1.48	1.48	1.48				1.95	2.44
1	1.315	0.87	0.87	1.41	1.41		1.46	1.68	1.68	1.68		2.17	2.17	2.17				2.85	3.66
1 1/4	1.660	1.11	1.11	1.81	1.81		1.93	2.27	2.27	2.27		3.00	3.00	3.00				3.77	5.22
1 1/2	1.900	1.28	1.28	2.09	2.09		2.37	2.72	2.72	2.72		3.63	3.63	3.63				4.86	6.41
2	2.375	1.61	1.61	2.64	2.64		3.01	3.66	3.66	3.66		5.03	5.03	5.03				7.47	9.04
2 1/2	2.875	2.48	2.48	3.53	3.53		5.40	5.80	5.80	5.80		7.67	7.67	7.67				10.02	13.71
3	3.500	3.03	3.03	4.34	4.34		6.66	7.58	7.58	7.58		10.26	10.26	10.26				14.34	18.60
3 1/2	4.000	3.48	3.48	4.98	4.98		7.66	9.12	9.12	9.12		12.52	12.52	12.52					
4	4.500	3.92	3.92	5.62	5.62		8.67	10.80	10.80	10.80		15.00	15.00	15.00		19.02		22.53	27.57
5	5.563	6.36	6.36	7.78	7.78			14.63	14.63	14.63		20.80	20.80	20.80		27.06		32.99	38.59
6	6.625	7.59	7.59	9.30	9.30			18.99	18.99	18.99		28.60	28.60	28.60		36.43		45.39	53.21
8	8.625	9.92	9.92	13.41	13.41	22.38	24.72	28.58	28.58	28.58	35.67	43.43	43.43	43.43	51.00	60.77	67.82	74.76	72.49
10	10.750	15.21	15.21	18.67	18.67	28.06	34.27	40.52	40.52	40.52	54.79	54.79	64.49	54.79	77.10	89.38	104.23	115.75	104.23
12	12.750	21.00	21.00	24.19	24.19	33.41	43.81	49.61	53.57	49.61	73.22	65.48	88.71	65.48	107.42	125.61	139.81	160.42	125.61
14	14.000	23.09	23.09	27.76	36.75	45.65	54.62	54.62	63.50	54.62	85.13	72.16	106.23	72.16	130.98	150.93	170.37	189.29	
16	16.000	27.93	27.93	31.78	42.09	52.32	62.64	62.64	82.85	62.64	107.60	82.85	136.74	82.85	164.98	192.61	223.85	245.48	
18	18.000	31.46	31.46	35.80	47.44	58.99	82.23	70.65	104.76	70.65	138.30	93.54	171.08	93.54	208.15	244.37	274.48	308.79	
20	20.000	39.82	39.82	46.10	52.78	78.67	104.23	78.67	123.23	78.67	166.56	104.23	209.06	104.23	256.34	296.65	341.41	379.53	
22	22.000	43.84	43.84	50.76	58.13	86.69	114.92			86.69	197.60		251.05	114.92	303.16	353.94	403.38	451.49	
24	24.000	55.42	55.42	63.47	63.47	94.71	140.81	94.71	171.45	94.71	238.57	125.61	296.86	125.61	367.74	429.79	483.57	542.64	
26	26.000				85.68	136.30				102.72				136.30					
28	28.000				92.35	146.99	182.90			110.74				146.99					
30	30.000	79.51	79.51	99.02	99.02	157.68	196.26			118.76				157.68					
32	32.000				105.69	168.37	209.62		230.29	126.78				168.37					
34	34.000				112.36	179.06	222.99		245.00	134.79				179.06					
36	36.000				119.03	189.75	236.35		282.62	142.81				189.75					
38	38.000									150.83				200.44					
40	40.000									158.85				211.13					
42	42.000									166.86				221.82					
44	44.000									174.88				232.51					
46	46.000									182.90				243.20					
48	48.000									190.92				253.89					

Notes — (1) Calculated per ASME codes as Unit Weight (lbm / foot) = $10.69 \times (D_O - t) \times t$
(2) See important notes in related Pipe Wall Thickness table.
(3) Cells in Yellow highlight are stainless steel. All others are carbon steel.

Sources — Caculated from information in both ASME B36.10M-2004 and ASME B36.19M-2004.

Appendix 3D: ASME BPVC Design Tables for Pressure Vessels

Table 3D-1: BPVC Maximum Allowable Stress Values (S, in psi) for Common Steels

Data for these ferrous material specs selected from ASME BPVC Section II, Part D, Table 1A (for applications conforming to Section VIII, Division 1) and Table 2A (for applications conforming to Section VIII, Division 2), in accord with BPVC Section VIII, Division 1, for Carbon and Low Alloy Steels.

Spec No.	Type / Grade	ASME BPVC Section VIII	
		Div. 1, S (psi)	Div. 2, S(psi)
SA-202	Grade A	18,700	--
	Grade B	21,200	--
SA-203	Grade A	16,200	21,700
	Grade B	17,000	23,300
	Grade D	16,200	21,700
	Grade E	17,500	23,300
SA-204	Grade A	16,200	21,700
	Grade B	17,500	23,300
	Grade C	18,700	25,000
SA-225	Grade A	17,500	23,300
	Grade B	18,750	25,000
SA-285	Grade A	11,200	15,000
	Grade B	12,500	16,700
	Grade C	13,700	18,300
SA-299		18,700	25,000
SA-302	Grade A	18,700	25,000
	Grade B	20,000	26,700
	Grade C	20,000	26,700
	Grade D	20,000	26,700
SA-353		25,000	33,300
SA-357		15,000	20,000
SA-387	Grade A-55	13,700	18,300
	Grade B-55	13,700	18,300
	Grade C-60	15,000	20,000
	Grade D-60	15,000	20,000
	Grade E-60	15,000	20,000
SA-387	Grade A-70	17,500	23,300
	Grade B-65	16,200	21,700
	Grade C-75	18,700	25,000
	Grade D-75	18,700	25,000
	Grade E-75	18,750	25,000

Spec No.	Type / Grade	ASME BPVC Section VIII	
		Div. 1, S (psi)	Div. 2, S(psi)
SA-410		15,000	20,000
SA-442	Grade 55	13,700	18,300
	Grade 60	15,000	20,000
SA-515	Grade 55	13,700	18,300
	Grade 60	15,000	20,000
	Grade 65	16,200	21,700
	Grade 70	17,500	23,300
SA-516	Grade 55	13,700	18,300
	Grade 60	15,000	20,000
	Grade 65	16,200	21,700
	Grade 70	17,500	23,300

GENERAL NOTE: Maximum allowable stress values in tension for the materials listed in the above table are contained in ASME BPVC Subpart 1 of Section II, Part D (see UG-23).

Table 3D-2: Pressure Vessel Materials Typically Specified, According to BPVC

	Low Pressure	Common Steel	NACE MR-01-75	Low Temp –50° F <T T < –20°F	Lower Temp T < –50°F	High CO_2 Service
Plate	SA-36 SA-283-C	SA-5 16-70	SA-5 16-70	SA-5 16-70	SA-240-304L	SA-240-316L
Pipe	SA-53-B	SA-106-B	SA-106-B	SA-333-6	SA-312 TP-304L	SA-312 TP-316L
Flanges & Fittings	SA-1 05 SA-1 81-1	SA-105 SA-1 81-1	SA-105	SA-350-LF1	SA-182 F-304L	SA-1 82 F-316L
Stud Bolts	SA-193-B7	SA-193-B7	SA-193-B7M	SA-320-L7	SA-193-B8	SA-193-B8M
Nuts	SA-194-2H	SA-194-2H	SA-194-2M	SA-1 94-4	SA-1 94-8 A	SA-194-8MA

* This table is conceptual and instructive, but not a formal part of ASME code. It was compiled from information in ASME codes, to summarize typical oilfield applications. Always remember to consult current and specific codes and regulations from ASME, API or other official sources to obtain final design and operations direction.

Table 3D-3: Maximum Allowable Joint Efficiencies (E) for Arc and Gas Welded Joints (ASME Table UW-12)

No.	Type of Joint Description	Limitations	(a) Fully Radio-graphed [1]	(b) Spot Examined [2]	(c) Not Spot Examined [3]
1	Butt joints as attained by double-welding or by other means which will obtain the same quality of deposited weld metal surface to agree with the requirements of UW-35. Welds using metal backing strips which remain in place are executed.	None	1.00	0.85	0.70
2	Single-welded butt joint with backing strip other than those included under (1)	(a) None except as in (b) below (b) Butt weld with one plate offset-for circumferential joints only, see UW-13(c) and Fig. UW-13.1 (k)	0.90	0.80	0.68
3	Single-welded butt joint without use of backing strip	Circumferential joins only, not over 5/8-inch thick and not over 24-inches outside diameter	NA	NA	0.60
4	Double full fillet lap joint	Longitudinal joints not over 3/8-inch thick circumferential joints not over 5/8-inch thick	NA	NA	0.55
5	Single full fillet lap joints with plug welds conforming to UW-17	(a) Circumferential joints [4] for attachment of heads not over 24-inches outside diameter to shells not over ½ inch thick. (b) Circumferential joints for the attachment to shells of jackets not over 5/8 inch in nominal thickness where the distance from the edge of the plate is not less than 1-1/2 times the diameter of the hole for the plug.	NA	NA	0.50

Table 3D-3: Maximum Allowable E, continued —

No.	Type of Joint Description	Limitations	(a) Fully Radio-graphed [1]	(b) Spot Examined [2]	(c) Not Spot Examined [3]
6	Single full fillet lap joints without plug welds	(a) For the attachment of heads convex to pressure to shells not over 5/8-inch required thickness, only with use of fillet weld on inside of shell; or (b) For attachment of heads having pressure in either side, to shells not over 24-inches inside diameter and not over 1/4-inch required thickness with fillet weld on outside of head flange only.	NA	NA	0.45

1 *See* UW-12(a) and UW-51.
2 *See* US-12(b) and UW-52.
3 The maximum allowable joint efficiencies shown in this column are the weld joint efficiencies multiplied by 0.80 (and rounded to the nearest 0.05), to effect the basic reduction in allowable stress required by the Division for welded vessels that are not spot examined. See UW-12 (c).
4 Joints attaching hemispherical heads to shells are excluded.

Appendix 3E: MAWP (Maximum Allowable Working Pressure) Tables

Table 3-E-1: MAWP from API RP 14E, Based on ASME B31.3 Requirements

MAXIMUM ALLOWABLE WORKING PRESSURES ASTM A106. GRADE B. SEAMLESS PIPE

1	2	3	4	5	6	7	8	9	10
Nominal Size In	Outside Diameter In	Nominal Wall Thickness In	Nominal Weight Per Foot Lb	Weight Class	Schedule No.	MAXIMUM ALLOWABLE WORKING PRESSURES — PSIG			
						-20/400'F	401/600*F	601/600'F	601/660'F
2	2.375	0.218	5.02	XS	80	2489	2352	2153	2115
		0.344	7.46	—	160	4618	4364	3994	3926
		0.436	9.03	XXS	—	6285	5939	5436	6342
2½	2.875	0.276	7.66	XS	80	2814	2660	2434	2392
		0.375	10.01	—	160	4194	8963	3628	3566
		0.652	13.70	XXS	—	6850	6473	6926	6822
		0.750	17.02	—	—	9772	9423	8625	8476
3	3.600	0.300	10.26	XS	80	2553	2412	2208	2170
		0.438	14.31	—	160	4123	8896	3666	8604
		0.600	18.58	XXS	—	6090	6765	6268	6176
4	4.500	0.237	10.79	STD	40	1439	1360	1245	1223
		0.337	14.98	XS	80	2276	2151	1969	1934
		0.438	18.98	—	120	3149	2976	2724	2676
		0.631	22.62	—	160	3979	3760	3442	3382
		0.674	27.64	XXS	—	5307	5015	4691	4611
6	6.625	0.280	18.97	STD	40	1206	1139	1043	1026
		0.432	28.57	XS	80	2062	1949	1784	1763
		0.562	36.42	—	120	2817	2663	2437	2395
		0.719	46.34	—	160	3760	366	3252	3196
		0.864*	63.16	XXS	—	4660	4404	4031	8961
8	8.626	0.277	24.70	—	80	908	858	786	772
		0.322	28.65	STD	40	1098	1038	960	934
		0.406	85.66	—	60	1457	1877	1260	1288
		0.600	43.39	XS	80	1864	1762	1612	1684
		0.694	60.93	—	100	2278	2153	1970	1936
		0.719	60.69	—	120	2838	2682	2465	2418
		0.812*	67.79	—	140	3263	3084	2828	2774
		0.876*	72.42	XXS	—	8655	3369	3075	8022
		0.906*	74.71	—	160	3700	3496	3200	8146
10	10.76	0.250	28.04	—	20	636	601	660	541
		0.279	31.20	—	—	733	693	634	023
		0.307	34.24	—	30	827	781	716	703
		0.366	40.48	STD	40	1023	967	886	869
		0.600	64.74	XS	60	1486	1403	1284	1262
		0.594	64.40	—	80	1811	1712	1567	1640
		0.719	77.00	—	100	2252	2128	1948	1914
		0.844*	89.27	—	120	2700	2662	2336	2295
		1.000*	104.13	XXS	140	3271	3091	2829	2780
		1.126*	115.65	—	160	3737	3631	3232	8176

* All welds must be stress relieved.

Table 3E-1: MAWP Based on ASME B31.3, Continued

MAXIMUM ALLOWABLE WORKING PRESSURES ASTM A106. GRADE B. SEAMLESS PIPE

1	2	3	4	5	6	7	8	9	10
						MAXIMUM ALLOWABLE WORKING PRESSURES — PSIG			
Nominal Size In	Outside Diameter In	Nominal Wall Thickness In	Nominal Weight Per Foot Lb	Weight Class	Schedule No.	-20/400'F	401/600'F	601/600'F	601/660'F
12	12.750	0.250	33.38	—	20	635	606	463	466
		0.330	43.77	—	30	760	719	668	646
		0.376	49.56	STD	—	888	839	768	765
		0.406	53.56	—	40	976	923	845	830
		0.500	65.42	XS	—	1246	1177	1078	1059
		0.662	73.22	—	60	1425	1347	1233	1212
		0.688	88.57	—	80	1794	1696	1652	1525
		0.844*	107.29	—	100	2258	2133	1953	1919
		1.000*	125.49	XXS	120	2730	2579	2361	2320
		1.125*	139.68	—	140	3114	2943	2694	2647
		1.312*	160.33	—	160	3700	3496	3200	S146
14	14.000	0.250	36.71	—	10	487	460	421	414
		0.312	45.68	—	20	645	610	658	649
		0.376	54,57	STD	30	807	763	698	686
		0.438	63.37	—	40	971	917	840	826
		0.500	72.09	XS	—	1132	1070	979	962
		0.594	85.01	—	60	1379	1303	1193	1172
		0.750	106.13	—	80	1794	1696	1662	1625
		0.938*	130.79	—	100	2304	2177	1993	1968
		1.094*	150.76	—	120	2734	2584	2365	2324
		1.250*	170.22	—	140	3171	2997	2743	2696
		1.406*	189.15	—	160	3616	3417	3128	8074
16	16.000	0.250	42.05	—	10	425	402	368	362
		0.312	62.36	—	20	564	633	488	479
		0.376	62.58	STD	30	705	666	610	599
		0.600	82.77	XS	40	988	934	855	840
		0.656	108.00	—	60	1345	1271	1164	1143
		0.843*	137.00	—	80	1780	1682	1640	1613
		1.031*	165.00	—	100	2225	2103	1925	1891
		1.218*	193.00	—	120	2675	2528	2314	2274
		1.437*	224.00	—	140	3212	3036	2779	2731
18	18.000	0.250	47.39	—	10	378	357	827	321
		0.812	69.03	—	20	501	473	433	425
		0.876	70.69	STD	—	626	591	641	632
		0.438	82.06	—	30	752	710	650	639
		0.600	93.45	XS	—	876	828	768	745
		0.562	106.00	—	40	1001	946	866	861
		0.718	133.00	—	60	1319	1246	1141	1121
		0.937*	171.00	—	80	1771	1674	1532	1606
		1.166*	208.00	—	100	2232	2109	1931	1897
		1.343*	239.00	—	150	2632	2487	2277	2287

* All must be stress relieved.

(Source — API RP 14E Table 2.5)

Table 3E-2: MAWP from GPSA Engineering Data Book, Based on ASME B31.8 Requirements

Nom Pipe Size	O.D.	Wall Thk.	Allowable Working Pressure up to 250°F, in psig																			
			Construction Type Design Factors																			
			Type A, F= 0.72					Type B, F= 0.60					Type C, F= 0.50					Type D, F= 0.40				
			GR.B					GR.B					GR.B					GR.B				
			35000	42000	46000	52000	60000	35000	42000	46000	52000	60000	35000	42000	46000	52000	60000	35000	42000	46000	52000	60000
2	(STD)	.154	3268					2723					2270					118				
	2.375	.218	4626					3855					3213					2570				
		.125	1800					1500					1250					1000				
		.156	2246					1872					1560					1248				
		.188	2707					2256					1880					1504				
3	3.500	.216	3110					2592					2160					1728				
	(STD)	.250	3600					3000					2500					2000				
		.281	4046					3372					2810					2248				
		.300	4320					2600					3000					2400				
		.125	1400	1680	1840			1167	1400	1533			973	1167	1278			778	933	1022		
		.156	1747	2097	2296			1456	1747	1913			1214	1456	1595			971	1165	1276		
		.188	2105	2526	2767			1754	2105	2306			1462	1755	1922			1170	1404	1537		
		.219	2453	2943	3223			2044	2453	2686			1704	2044	2239			1363	1635	1791		
4	4.500	.237	2654	3185	3488			2212	2654	2907			1844	2212	2423			1475	1770	1938		
	(STD)	.250	2800	3360	3680			2333	2800	3067			1945	2333	2556			1556	1869	2044		
		.281	3147	3776	4136			2623	3147	3447			2186	2622	2873			1748	2098	2298		
		.312	3494	4193	4593			2912	3494	3827			2427	2912	3190			1941	2330	2552		
		.337	3774	4530	4961			3145	3775	4134			2621	3146	3445			2097	2516	2756		
		.156	1187	1424	1560	1783		989	1187	1300	1469		824	989	1083	1224		659	791	866	980	
		.188	1429	1716	1880	2124		1192	1430	1567	1770		993	1192	1306	1475		794	954	1044	1180	
		.219	1666	2000	2190	2475		1388	1666	1825	2063		1157	1389	1521	1719		926	1111	1216	1375	
		.250	1902	2282	2500	2826		1585	1902	2083	2355		1321	1585	1736	1963		1057	1268	1389	1570	
6	6.625	.280	2130	2556	2799	3164		1775	2130	2333	2637		1479	1775	1944	2198		1183	1420	1555	1758	
	(STD)	.312	2373	2848	3120	3527		1978	2374	2600	2933		1549	1978	2167	2449		1319	1582	1733	1959	
		.375	2853	3424	3750	4237		2377	2853	3125	3531		1981	2378	2604	29433		1585	1902	2083	2354	
		.132	3287	3943	4319	4883		2739	3286	3399	4069		2283	2738	3000	3391		1828	2191	2400	2713	
		.156	912	1094	1198	1354		760	912	998	1128		633	760	832	940		506	606	666	752	
		.188	1098	1318	1444	1632		915	1098	1203	1360		763	915	1003	1133		610	732	802	907	
		.203	1186	1424	1559	1762		989	1186	1299	1469		824	989	1083	1224		659	791	866	979	
		.219	1280	1535	1681	1901		1067	1280	1401	1584		889	1067	1168	1320		711	853	934	1056	
		.250	1461	1753	1920	2170		1217	1461	1600	1809		1014	1217	1333	1507		812	974	1067	1206	
8	8.625	.277	1618	1942	2128	2405		1349	1618	1773	2004		1124	1349	1478	1670		899	1079	1182	1336	
	(STD)	.312	1823	2189	2396	2709		1520	1823	1997	2258		1266	1520	1664	1941		1013	1216	1331	1505	
		.322	1882	2258	2473	2796		1568	1882	2061	2329		1307	1568	1717	1881		1045	1254	1374	1553	
		.344	2011	2412	2642	2988		1676	2011	2202	2490		1396	1676	1835	2075		1117	1340	1468	1660	
		.375	2191	2628	2880	3256		1826	2191	2399	2713		1521	1826	1999	2261		1217	1460	1599	1806	
		.438	2560	3071	3364	3803		2133	2560	2804	3170		1778	2133	2336	2641		1422	1706	1869	2113	
		.500	2922	3506	3840	4341		2435	2922	3200	3617		2029	2435	2667	3014		1623	1948	2133	2412	
		.188	881	1058	1158	1310		733	881	965	1091		612	735	804	909		490	588	644	728	
		.203	959	1143	1251	1415		794	952	1043	1179		661	794	869	983		529	635	695	786	
		.219	1026	1231	1348	1525		855	1026	1124	1271		713	855	936	1059		570	684	749	847	
		.250	1172	1407	1540	1741		977	1172	1284	1451		814	977	1070	1209		651	781	856	967	
		.279	1309	1570	1719	1944		1091	1309	1433	1620		909	1091	1194	1350		727	872	955	1080	
10	10.750	.307	1440	1728	1892	2138		1200	1440	1577	1782		1000	1200	1314	1486		800	960	1051	1189	
	(STD)	.344	1613	1935	2120	2396		1344	1613	1767	1997		1120	1344	1473	1664		896	1075	1178	1331	
		.365	1711	2054	2249	2542		1426	1711	1874	2119		1188	1426	1562	1766		951	1141	1249	1412	
		.438	2054	2464	2700	3051		1712	2054	2250	2543		1426	1712	1875	2119		1141	1369	1500	1695	
		.500	2344	2813	3081	3483		1953	2344	2567	2902		1628	1953	2140	2419		1302	1563	1712	1935	
		.188	743	892	977	1104		619	743	814	920		516	619	678	767		413	495	543	613	
		.203	803	963	1055	1193		669	803	879	993		558	669	733	829		446	535	586	663	
		.219	866	1039	1138	1287		722	866	948	1073		601	722	790	894		481	577	632	715	
		.250	988	1186	1299	1468		824	988	1082	1224		685	824	902	1020		548	659	722	816	
		.281	1111	1332	1460	1651		926	1111	1217	1376		771	926	1014	1146		617	740	811	917	
12	12.750	.312	1233	1480	1620	1832		1028	1233	1350	1527		856	1028	1125	1273		685	822	900	1018	
	(STD)	.330	1305	1566	1715	1939		1088	1305	1430	1616		906	1088	1191	1346		725	870	953	1077	
		.344	1359	1631	1786	2020		1133	1359	1488	1683		944	1133	1240	1403		755	906	992	1122	
		.375	1482	1779	1948	2202		1235	1482	1624	1835		1029	1235	1353	1529		824	988	1082	1224	
		.406	1606	1926	2110	2385		1338	1606	1758	1988		1115	1338	1465	1656		892	1070	1172	1325	
		.438	1732	2077	2275	2572		1443	1732	1896	2144		1203	1443	1580	1786		962	1154	1264	1429	
		.500	1976	2372	2598	2936		1647	1976	2165	2447		1373	1647	1804	2039		1098	1318	1443	1631	

* Type A construction also applicable to "Liquid Petroleum Transportation Piping Code," ANSI B31.4-1979

Table 3E-2: MAWP Based on ASME B31.8, Continued

Nom Pipe Size	O.D.	Wall Thk.	Allowable Working Pressure up to 250°F, in psig																		
			Construction Type Design Factors																		
			Type A_1 F= 0.72					Type B F= 0.60					Type C_1 F= 0.50					Type D_1 F= 0.40			
			GR.B					GR.B					GR.B					GR.B			
			35000	42000	46000	52000	60000	35000	42000	46000	52000	60000	35000	42000	46000	52000	60000	35000	42000	46000	52000	60000
16	16.000 (STD)	.219	689	828	905	1024	1183	575	689	755	854	986	479	575	629	711	822	383	460	503	569	657
		.250	786	945	1035	1170	1350	656	786	863	976	1125	547	656	719	813	936	438	525	575	650	750
		.281	886	1063	1164	1316	1518	738	886	970	1097	1265	615	738	809	914	1054	492	591	647	731	843
		.312	982	1179	1291	1460	1685	818	982	1076	1217	1404	682	819	896	1014	1170	546	655	717	611	936
		.344	1084	1300	1424	1609	1858	903	1084	1187	1341	1548	753	903	989	1118	1290	602	722	791	894	1032
		.375	1181	1418	1563	1755	2025	984	1181	1294	1463	1688	820	984	1078	12119	1407	656	788	863	975	1125
		.438	1379	1655	1813	2049	2365	1149	1379	1511	1707	1971	958	1149	1259	1423	1646	766	919	1007	1138	1314
		.500	1576	1890	2070	2340	2700	1313	1575	1725	1950	2250	1094	1313	1438	1625	1875	875	1050	1150	1300	1500
		.625	1969	2363	2588	2925	3375	1641	1969	2157	2438	2512	1368	1641	1796	2031	2344	1094	1313	1438	1625	1875
20	20.000 (STD)	.250	630	756	828	936	1080	525	630	690	780	900	438	525	575	650	750	350	420	460	520	600
		.281	709	851	931	1053	1214	591	709	776	878	1012	492	591	647	731	843	394	473	518	285	674
		.312	786	943	1033	1168	1348	656	786	861	973	1123	547	656	719	813	936	438	525	575	650	749
		.344	867	1040	1139	1289	1486	723	868	950	1074	1238	603	723	791	895	1032	482	578	633	715	826
		.375	945	1134	1242	1404	1620	788	945	1085	1170	1350	656	788	863	976	1125	525	630	690	780	900
		.406	1023	1228	1345	1520	1754	853	1023	1121	1267	1462	710	853	934	1066	1218	568	682	747	844	974
		.438	1103	1324	1450	1639	1892	919	1103	1208	1366	1577	766	919	1007	1138	1314	613	735	805	910	1051
		.500	1260	1512	1656	1872	2160	1050	1260	1380	1560	1800	875	1050	1150	1300	1500	700	840	920	1040	1200
		.625	1575	1890	2070	2340	2700	1313	1575	1725	1950	2250	1094	1313	1438	1625	1875	875	1060	1150	1300	1500
		.750	1890	2268	2484	2808	3240	1575	1890	2070	2340	2700	1313	1575	1725	1950	2250	1050	1260	1380	1560	1800
24	24.000 (STD)	.281	590	709	776	877	1012	492	591	647	731	843	410	492	539	609	703	328	394	431	467	562
		.312	655	786	861	973	1123	547	656	719	812	969	456	547	599	677	780	365	438	479	542	624
		.344	722	866	949	1073	1238	602	722	791	894	1032	502	602	659	745	880	401	481	527	596	688
		.375	788	945	1035	1170	1350	656	788	862	975	1125	547	656	719	813	938	438	525	575	650	750
		.406	853	1024	1121	1267	1462	711	858	935	1056	1215	592	711	779	880	1015	474	569	623	704	812
		.438	919	1103	1208	1366	1577	766	919	1006	1138	1314	638	766	859	948	1095	510	613	671	758	876
		.500	1050	1260	1380	1560	1800	875	1050	1150	1300	1500	729	875	958	1083	1250	583	700	767	867	1000
		.625	1312	1575	1725	1950	2250	1094	1313	1437	1625	1875	911	1094	1198	1354	1563	729	875	958	1083	1250
		.750	1575	1890	2070	2340	2700	1313	1575	1725	1950	2250	1094	1313	1438	1625	1875	875	1060	1150	1300	1500
26	26.000 (STD)	.281	545	654	717	810	934	454	545	597	675	778	379	454	498	563	649	303	363	398	450	519
		.312	604	727	796	900	1037	503	604	663	750	864	421	505	553	625	720	337	404	442	500	576
		.344	667	800	876	990	1143	556	668	730	825	963	463	555	608	688	794	370	444	487	550	635
		.375	726	872	955	1080	1426	606	727	796	900	1039	505	606	663	750	866	404	485	531	600	692
		.406	787	945	1035	1170	1348	656	787	863	875	1124	547	656	719	813	937	437	585	575	650	750
		.438	848	1018	1115	1260	1456	707	848	929	1050	1213	589	707	774	875	1011	471	585	619	700	809
		.500	969	1163	1274	1440	1662	808	969	1062	1200	1385	673	808	884	1000	1154	538	646	708	800	923
		.625	1211	1454	1592	1800	2077	1010	1212	1327	1500	1731	841	1010	1106	1250	1442	673	808	885	1000	1154
		.750	1454	1745	1911	2160	2492	1212	1454	1592	1800	2077	1010	1212	1327	1500	1731	808	969	1062	1200	1385
30	30.000 (STD)	.312	525	630	690	780	899	438	525	575	650	749	365	436	479	542	624	292	350	383	433	499
		.344	576	693	759	858	991	482	577	632	715	826	401	481	527	596	688	321	385	422	477	550
		.375	630	756	828	936	1080	525	630	690	780	900	437	535	575	650	750	350	420	460	520	600
		.406	682	619	897	1014	1169	568	682	747	845	974	474	569	623	704	812	379	455	498	563	630
		.438	735	882	966	1092	1261	612	735	805	910	1061	510	612	671	758	876	408	490	537	607	701
		.500	840	1006	1104	1248	1440	700	840	920	1040	1200	583	700	767	867	1000	467	560	613	693	800
		.625	1050	1260	1380	1560	1800	875	1050	1150	1300	1500	729	845	958	1063	1250	583	700	767	867	1000
		.750	1260	1512	1656	1872	2160	1050	1260	1380	1560	1800	875	1050	1150	1300	1500	700	840	920	1040	1200

* Type A construction also applicable to "Liquid Petroleum Transportation Piping Code," ANSI B31.4-1979

Note: 1. All dimension are in inches
2. See Fig. 17-24

(Source — GPSA. *Engineering Data Book* (2004) Fig. 17-27.)

Appendix 3F
Pipe, Valve and Fittings Specifications*

Detailed piping specifications are commonly provided in **Pipe, Valve and Fittings Tables**. The following information may be included —

- Product names or descriptions
- Size ranges
- General specifications
- Valve figure numbers
- Pressure ratings
- Temperature limitations
- Pipe schedules
- Material specifications
- Vendor data
- Special notes, and other information as appropriate.

Such tables are generally prepared for use as general company-wide guides, for consistency from one facility or plant to another.

This Appendix shows **two hypothetical Pipe, Valve and Fittings Tables**:

- **Example 1** is an index for tables that specify pipes, valves and fittings.
- **Example 2** is a specification table for ANSI 150 pipe, valves and fittings. This could be the Table A listed in the Example 1 index.
- Example 2 does not give valve manufacturers and valve figure numbers. Each line item in a final completed Table A would specify one or more vendors with figure numbers to identify their products (“Add Vendor Information”).
- Valve equivalency tables are available from various manufacturers. Using these tables, with one manufacturer's figure number as a base, it is possible to determine the different valve manufacturers' equivalent figure numbers. By having an equivalent figure number, a valve can be quickly located in a manufacturer's catalog. That procedure allows engineers and operators to compare manufacturing details and materials of alternate valves.

* Source — Appendix C of API RP 14E. (1991, Reaffirmed 2007)

Table 3F-1: Hypothetical Pipe, Valve and Fittings Table

Table	Service	Pressure Rating Class
A	Non-Corrosive Hydrocarbons & Glycol	ANSI 150
B	Non-Corrosive Hydrocarbons & Glycol	ANSI 300
C	Non-Corrosive Hydrocarbons & Glycol	ANSI 400
D	Non-Corrosive Hydrocarbons & Glycol	ANSI 600
E	Non-Corrosive Hydrocarbons & Glycol	ANSI 900
F	Non-Corrosive Hydrocarbons & Glycol	ANSI 1500
G	Non-Corrosive Hydrocarbons & Glycol	ANSI 2500
H	Non-Corrosive Hydrocarbons	API 2,000 psi
I	Non-Corrosive Hydrocarbons	API 3,000 psi
J	Non-Corrosive Hydrocarbons	API 5,000 psi
K	Non-Corrosive Hydrocarbons	API 10,000 psi
L	Air	ANSI 150 and 300
M	Water	Cast Iron 125
N	Steam and Steam Condensate	ANSI 150, 300, 400 & 600
O	Drains and Sewers	Atmospheric
P	Spare	
Q	Spare	
R	Spare	
SV	Valves for Corrosive Service	General
AA	Corrosive Hydrocarbons	ANSI 150
BB	Corrosive Hydrocarbons	ANSI 300
CC	Corrosive Hydrocarbons	ANSI 400
DD	Corrosive Hydrocarbons	ANSI 600
EE	Corrosive Hydrocarbons	ANSI 900
FF	Corrosive Hydrocarbons	ANSI 1500
GG	Corrosive Hydrocarbons	ANSI 2500

Table 3F-2: Hypothetical Piping Specification Table

Non-Corrosive Hydrocarbon and Glycol Service ANSI 150

Temperature Range .....–20 to 650º F
Maximum Pressure ... Depends on Flange Rating[1] at Service Temperature

Size Range	General Specification[2]	Platform Service
Pipe	Seamless, Grade depends on Service	ASTM A106, Grade B, Seamless[3]
¾" and smaller nipples	Threaded and coupled	Schedule 160 or XXH
1½" and smaller pipe	Threaded and coupled	Schedule 80 min
2" through 3" pipe	Beveled end	Schedule 80 min
4" and larger pipe	Beveled end	See Table 2.4
Valves (Do not use for temperatures above maximum indicated.)		
Ball		
1½" and smaller	1500 lb CWP, AISI 316 SS, screwed, regular port, wrench operated, Teflon seat	Manufacture's Figure No. _____ (300 ºF)
¾" through 1½"	1500 lb CWP, CS, screwed, regular port, wrench operated, Teflon seat	Manufacture's Figure No. _____ or Figure No. _____ (450 ºF)
2" through 8"	ANSI 150, CS, RF flanged, regular port, lever or hand wheel operated, trunnion mounted	(Add Vendor Information)
10" and larger	ANSI 150, CS, RF flanged, regular port, lever or hand wheel operated, trunnion mounted	(Add Vendor Information)
Gate		
½" and smaller	2000 lb CWP, screwed, bolted bonnet, AISI 316 SS	(Add Vendor Information)
¾" through 1½"	2000 lb CWP, screwed, bolted bonnet, forged steel	(Add Vendor Information)
2" through 12"	ANSI 150, CS, RF flanged, standard trim, handwheel or lever operated	(Add Vendor Information)

Temperature Range .....–20 to 650º F
Maximum Pressure ... Depends on Flange Rating[1] at Service Temperature

Size Range	General Specification[2]	Platform Service
Globe		
1½" and smaller (Hydrocarbons)	2000 lb CWP CS screwed	(Add Vendor Information)
1½" and smaller (Glycol)	2000 lb CWP CS socketweld	(Add Vendor Information)
2" and larger	ANSI 150, CS, RF flanged, handwheel operated	(Add Vendor Information)
Check		
1½" and smaller	ANSI 600, FS screwed, bolted bonnet, standard trim	(Add Vendor Information)
2" and larger	ANSI 150, CS, RF flanged, bolted bonnet[4], swing check, standard trim	(Add Vendor Information)
Reciprocating Compressor Discharge	ANSI300, CS, RF flanged, piston check, bolted bonnet[4]	(Add Vendor Information)
Lubricated Plug		
1½" through 6"	ANSI 150, CS, RF flanged, bolted bonnet (See Section 3.2.c)	(Add Vendor Information)
Non-Lubricated Plug		
1½" through 6"	ANSI 150, CS, RF flanged, bolted bonnet (See Section 3.2.c)	(Add Vendor Information)
Compressor Laterals	Use ball valves	
Needle		
¼" through ½"	6000 lb CWP, bar stock, screwed, AISI 316 SS	(Add Vendor Information)
Fittings[3, 4]		
Ells and Tees		
¾" and smaller	6000 lb FS, screwed	ASTM A105
1" through 1½"	3000 lb FS, screwed	ASTM A105
2" and larger	Butt weld, seamless, wall to match pipe	ASTM A234, Grade WPB

Temperature Range .....–20 to 650º F
Maximum Pressure ... Depends on Flange Rating[1] at Service Temperature

Size Range	General Specification[2]	Platform Service
Unions		
¾" and smaller	6000 lb FS, screwed, ground joint, steel to steel seat	ASTM A105
2" and larger	Use flanges	
Couplings		
1" and smaller	6000 lb FS, screwed	ASTM A105
1½" and larger	3000 lb FS, screwed	ASTM A105
Plugs		
1½" and smaller	Solid bar stock, forged steel	ASTM A105
2" and larger	X-Strong, seamless, weld cap	ASTM A234, Grade WPB
Screwed Reducers		
¾" and smaller	Schedule 160, seamless	ASTM A105
1" through 1½"	Schedule 80, seamless	ASTM A105
Flanges[3, 4]		
1½" and smaller	ANSI 150, FS, RF screwed	ASTM A105
2" and larger	ANSI 150, FS, RF weld neck, bored to pipe schedule	ASTM A105
Bolting		
Studs	Class 2 fit, threaded over length	ASTM A193, Grade B7[4]
Nuts	Class 2 fit, heavy hexagon, semi-finish	ASTM A194, Grade 2H[4]
Gaskets	Spiral wound asbestos	Spiral Wound Mfg. Type _____ or Mfg. No. _____ w/ AISI 304 SS windings
Thread Lubricant	Conform to APU Bulletin 5A2	Mfg. No. _____

Notes:
1. API 5L, Grade B, Seamless may be substituted if ASTM A106, Grade B, Seamless is not available.
2. For glycol service, all valves and fittings shall be flanged or socketweld.
3. Studs and nuts shall be hot-dip galvanized in accordance with ASTM A153.
4. Fittings and flanges that do not require normalizing in accordance with ASTM A105, due to size or pressure rating, shall be normalized when used for service temperatures from –20 ºF to 60 ºF. Fittings and flanges shall be marked HT, N, *, or with some other appropriate marking to designate normalizing.

Appendix 3G — Selected Code Sources

Table 3G-1 Selected List of API, ASME B16 and MSS Code, Standards, Guides and Related Documents for Valves & Fittings

API	
SPEC 6A	Specification for Wellhead and Christmas Tree Equipment
SPEC 6D	Specification for Pipeline Valves
SPEC 6FA	Specification for Fire Test for Valves
SPEC 6FB	Specification for Fire Test for End Connections
SPEC 6FC	Fire Test for Valve with Automatic Backseats
SPEC 6FD	Fire Test for Check Valves
SPEC 6H	Specification on End Closures, Connectors, and Swivels
SPEC 6RS	Referenced Standards for Committee 6, Standardization of Valves and Wellhead Equipment.
RP 14E	Design and Installation of Offshore Production Platform Piping Systems
RP 520, Part 1	Sizing, Selection, and Installation of Pressure-Relieving Devices in Refineries — Part 1, Sizing and Selection
RP 520, Part 2	Sizing, Selection, and Installation of Pressure-Relieving Devices in Refineries — Part 2, Installation
STD 521	Guide for Pressure-Relieving and Depressuring Systems
STD 526	Flanged Steel Pressure Relief Valves
STD 527	Seat Tightness of Pressure Relief Valves
RP 574	Inspection Practices for Piping System Components
RP 576	Inspection of Pressure Relieving Devices
STD 594	Check Valves: Flanged, Lug, Wafer and Butt-welding.
STD 598	Valve Inspection and Testing
STD 599	Metal Plug Valves — Flanged, Threaded and Welding Ends
STD 600	Bolted Bonnet Steel Gate Valves — Flanged and Butt-Welding Ends
STD 602	Steel Gate, Globe, and Check Valves for Sizes DN 100 and Smaller for the Petroleum and Natural Gas Industries

STD 603	Corrosion-Resistant, Bolted Bonnet Gate Valves — Flanged and Butt-Welding Ends
STD 607	Fire Test for Soft-Seated Quarter Turn Valves and Valves Equipped With Non-Metallic Seats
STD 608	Metal Ball Valves — Flanged and Butt-Welding Ends.
STD 609	Butterfly Valves: Double Flanged, Lug- and Wafer-Type
RP 615	Valve Selection Guide
ASME	
B16.1	Cast Iron Pipe Flanges and Flanged Fittings
B16.3	Malleable Iron Threaded Fittings
B16.4	Cast Iron Threaded Fittings
B16.5	Pipe Flanges and Flanged Fittings
B16.9	Factory-Made Wrought Steel Buttwelding Fittings
B16.10	Face-to-Face and End-to-End Dimensions of Valves
B16.11	Forged Steel Fittings, Socket-Welding and Threaded
B16.12	Cast Iron Threaded Drainage Fittings
B16.14	Ferrous Pipe Plugs, Bushings and Locknuts with Pipe Threads
B16.15	Cast Bronze Threaded Fittings
B16.18	Cast Copper Alloy Solder Joint Pressure Fittings
B16.20	Metallic Gaskets for Pipe Flanges — Ring-Joint, Spiral-Wound , and Jacketed
B16.21	Nonmetallic Flat Gaskets for Pipe Flanges
B16.22	Wrought Copper and Copper Alloy Solder Joint Pressure Fittings
B16.23	Cast Copper Alloy Solder Joint Drainage Fittings
B16.24	Cast Copper Alloy Pipe Flanges and Flanged Fittings
B16.25	Buttwelding Ends
B16.26	Cast Copper Alloy Fittings for Flared Copper Tubes
B16.28	Wrought Steel Buttwelding Short Radius Elbows and Returns
B16.29	Wrought Copper and Wrought Copper Alloy Solder Joint Drainage Fittings
B16.33	Manually Operated Metallic Gas Valves for Use in Gas Piping Systems Up to 125 psig
B16.34	Valves — Flanged, Threaded, and Welding End
B16.36	Orifice Flanges

B16.38	Large Metallic Valves for Gas Distribution
B16.39	Malleable Iron Threaded Pipe Unions
B16.40	Manually Operated Thermoplastic Gas
B16.42	Ductile Iron Pipe Flanges and Flanged Fittings, Classes 150 and 300
B16.44	Manually Operated Metallic Gas Valves for Use in House Piping Systems
B16.45	Cast Iron Fittings for Sovent Drainage Systems
B16.47	Large Diameter Steel Flanges: NPS 26 through NPS 60
B16.48	Steel Line Blanks
B16.49	Factory-Made Wrought Steel Buttwelding Induction Bends for Transportation and Distribution Systems
MSS	
SP-6	Standard Finishes for Contact Faces of Pipe Flanges of Valves and Fittings
SP-9	Spot Facing for Bronze , Iron and Steel Flanges
SP-25	Standard Marking System for Valves, Fittings, Flanges and Unions
SP-42	Class 150 Corrosion Resistant Gate, Globe, Angle and Check Valves with Flanged and Butt Weld Ends
SP-44	Steel Pipeline Flanges
SP-51	Class 150LW Corrosion Resistant Flanges and Cast Flanged Fittings
SP-54	Quality Standard for Steel Castings — Radiographic Inspection Method for Valves , Flange, Fittings and Other Piping Components
SP-55	Quality Standard for Steel Castings For Valves, Flanges and Fittings and Other Piping Components
SP-58	Pipe Hangers and Supports — Materials, Design, and Manufacture
SP-60	Connecting Flange Joint Between Tapping Sleeves and Tapping Valves
SP-61	Hydrostatic Testing of Steel Valves

SP-67	Butterfly Valves
SP69	Pipe Hangers and Supports — Selection and Application
SP-70	Cast Iron Gate Valves , Flanged and Threaded Ends
SP-71	Cast Iron Swing Check Valves, Flanged and Threaded Ends
SP-72	Ball Valves with Flanged or Butt-Welding Ends for General Service
SP-78	Cast Iron Plug Valves
SP-80	Bronze Gate, Globe Angle and Check Valves
SP-82	Valves Pressure Testing Methods
SP-84	Steel Valves Socket Welding and Threaded Ends
SP-86	Metric Data In Standards for Valves, Flanges and Fittings
SP-92	*MSS Valve User Guide*
SP-96	*Guidelines on Terminology for Valves and Fittings*
SP-99	*Instrument Valves*
SP-105	*Instrument Valves for Code Applications*
SP-110	*Ball Valves — Threaded, Socket-Welding, Solder Joint, Grooved and Flared Ends*
SP-118	*Compact Steel Globe & Check Valves — Flanged, Flangeless, Threaded & Welding Ends (Chemical & Petroleum Refinery Service)*
SP-131	*Metallic Manually Operated Gas Distribution Valves*

Table 3G-2: Summary Guide to Selected Codes and Standards for Piping Systems Design and Construction

Codes for Piping Systems Design & Construction	
Category	**Code**
Plants, Crude Flow Stations, Manifolds, and Offshore Platforms	
Specifications for pipe	ASME B31.3, B31.8, B36.10, B36.19; API 5L*, SLR, 5LU, RP14E ; ASTM A53, A105, A106, A333
Standard for welding pipe and fittings	ASME B31.3, B31.8, AP1 1104
Design	ASME B31. 3
Arc-welding electrodes	
Mild steel	AWS A5.1
Low-alloy steel	AWS A5.5
Weld fittings	ASME B16.9
Transmission Pipelines	
Specifications for line pipe	ANSI B36.49; ASTM A370; ASME B31.3, B31.4, B36.10, B36.19
Standard for welding pipelines and related facilities	API 5B, 5L*, SLR, 5LU; API 1104, ASME B31.4 (liquid petroleum), GT & DPS (natural gas)
Design	ASME GT & DPS
ARC-welding electrodes	
Mild steel	AWS A5.1
Low-alloy steel	AWS A5.5
Weld fittings	ASME GT& DPS, ANSI B1 6.9
Flanges	ANSI B16.5
Iron and steel gas welding rods	AWS A5.2
Field bends	ANSI 831. 1, ASME GT & DPS
Welding of steel in pipelines	ASME GT & DPS
Procedure qualifications	API 1104, ASME GT& DPS
Welder qualifications	API 1104, ASME GT& DPS
Repair and removal of defects	API 1104, ASME GT& DPS
Asphalt pipe coating	AWWA-C-203-Asphalt Institute

Codes for Piping Systems Design & Construction	
Category	**Code**
Inspection and testing of welds Weight coating	ASME GT & DPS ASTMC150, C33.A15, 0309
Field Pipelines	
Wellhead equipment Oil flowlines Gas lines and gas flowlines Tank battery piping Water injection lines Water source lines Gas injection lines	API-6A API 1104, ANSI/ASME B31. 4 ASME GT & DPS, API 1104 API 1104, ANSI/ASME B31. 3 API 1104, ANSI/ASME B31. 4 API 1104, ANSI/ASME B31. 4 API 1104, ASME GT& DPS
***NOTE:** The 33rd edition of the API Spec 5L includes the spiral weld process and grades X-42 through X-70 previously specified in Specs 5LS and 5LX.	

Appendix 4

Table of Properties of Pipe

Table No. 1 presented on the following pages is believed to be the most nearly complete tabulation of the dimensional properties of commercially available sizes of steel pipe ever published. It includes: the older weights of pipe (ST = standard weight, XS = extra strong, XX = dobule extra strong), the schedules given in ANSI Standard B36.10 (10, 20, etc.), the lighter commercially standardized pipe (LW = light weight), and those given in ANSI Standard B36.19 and ASTM Specification A409 (5S, 10S, 40S, 80S), the latter being applicable to corrosion resistant materials, except that Schedule 10S is also available in carbon steel in sizes 12" and smaller.

Piping designers will find herein all the dimensional data they may need to determine:

- pipe wall thicknesses required to resist internal pressure,
- bending stresses resulting from line expansion,
- bending stresses caused by weight loadings,
- pipe column sizes required to sustain given axial loads,
- flow areas and fifth powers of the diameter, useful in pressure drop calculations,
- surface areas for use in evaluating heat losses and insulation and coating requirements.

DEFINITION OF PROPERTIES

D = outside diameter of pipe, inches

d = inside diameter of pipe, inches

t = nominal wall thickness of pipe, inches

$A_o = \frac{D\pi}{12}$ = outside pipe surface, sq it per ft length

$A_i = \frac{d\pi}{12}$ = inside pipe surface, sq It per ft length

$A = \frac{(D^2 - d^2)\pi}{12}$ = cross-sectional metal area, sq in.

$A_f = \frac{d^2\pi}{4}$ = cross-sectional flow area, sq in.

$W = 34\,A$ = weight of pipe, lb per lt lengths

$W_w = 0.433\,A_f$ = weight of water filling, lb per ft length

$r_g = \sqrt{\frac{I}{A}} = \sqrt{\frac{D^2 + d^2}{4}}$ = radius of gyration, inches

$I = Ar_g^2 = 0.0941\,(D^4 - d^4)$ = moment of inertia, inches fourth

$Z = \frac{2I}{D} = 0.0982\,\frac{D^4 - d^4}{D}$ = section modulus, inches cube

TABLE NO. 1

DESIGN PROPERTIES of PIPE

NOMINAL PIPE SIZE and OUTSIDE DIAMETER inches	SCHEDULE NUMBER and/or WEIGHT	WALL THICK-NESS inches t	INSIDE DIAM-ETER inches d	FIFTH POWER of ID in.^{5} d^5	AREAS and WEIGHTS: SURFACE AREA OUT-SIDE sq ft per ft A_o	SURFACE AREA IN-SIDE sq ft per ft A_i	Cross-Sectional METAL AREA sq in. A	Cross-Sectional FLOW AREA sq in. A_f	WEIGHT of PIPE lb per ft W	WEIGHT of WATER lb per ft W_w	RADIUS of GYRA-TION inches r_g	MOMENT of INERTIA in.^{4} I	SEC-TION MOD-ULUS in.^{3} Z
1/8	10S	.049	.307	.00273	.106	.080	.055	.074	.186	.032	.1271	.0009	.0043
D = .405	40 ST 40S	.068	.269	.00141	.106	.070	.072	.057	.245	.025	.1215	.0011	.0052
	80 XS 80S	.095	.215	.00046	.106	.056	.092	.036	.314	.016	.1146	.0012	.0060
1/4	10S	.065	.410	.01159	.141	.107	.097	.132	.330	.057	.1694	.0028	.0103
D = .504	40 ST 40S	.088	.364	.00639	.141	.095	.125	.104	.425	.045	.1628	.0033	.0123
	80 XS 80S	.119	.302	.00251	.141	.079	.157	.072	.535	.031	.1547	.0038	.0140
3/8	10S	.065	.545	.04808	.177	.143	.124	.233	.423	.101	.2164	.0059	.0174
D = .675	40 ST 40S	.091	.493	.029112	.177	.129	.167	.191	.568	.083	.2090	.0073	.0216
	80 XS 80S	.126	.423	.01354	.177	.111	.217	.140	.793	.061	.1991	.0086	.0255
	10S	.083	.674	.13909	.220	.176	.375	.357	.671	.154	.269	.0143	.0341
	40 ST 40S	.109	.622	.09310	.220	.163	.613	.304	.851	.132	.261	.0171	.0407
1/2	80 XS 80S	.147	.546	.04852	.220	.143	.799	.234	1.088	.101	.250	.0201	.0478
D = .840	160	.187	.466	.02198	.220	.122	1.068	.171	1.304	.074	.240	.0221	.0527
	XX	.294	.252	.00102	.220	.066	1.431	.050	1.715	.022	.219	.0243	.0577

NOMINAL PIPE SIZE and OUTSIDE DIAMETER inches	SCHEDULE NUMBER and/or WEIGHT	WALL THICK-NESS inches t	INSIDE DIAM-ETER inches d	FIFTH POWER of ID in.^{5} d^5	AREAS and WEIGHTS: SURFACE AREA: OUT-SIDE sq ft per ft A_o	SURFACE AREA: IN-SIDE sq ft per ft A_i	Cross-Sectional: METAL AREA sq in. A	Cross-Sectional: FLOW AREA sq in. A_f	WEIGHT of: PIPE lb per ft W	WEIGHT of: WATER lb per ft W_w	RADIUS of GYRA-TION inches r_g	MOMENT of INERTIA in.^{4} I	SEC-TION MOD-ULUS in.^{3} Z
3/4	5S	.065	.920	.6591	.275	.241	.201	.664	.683	.288	.349	.0245	.0467
	10S	.083	.884	.5398	.275	.231	.252	.614	.857	.266	.343	.297	.0566
	40 ST 40S	.113	.824	.3799	.275	.216	.333	.533	1.131	.231	.334	.0370	.0706
	80 XS 80S	.154	.742	.2249	.275	.194	.434	.432	1.474	.187	.321	.0448	.0853
		.188	.675	.1401	.275	.177	.508	.358	1.728	.155	.312	.0495	.0943
D = 1.050	160	.218	.614	.0873	.275	.161	.570	.296	1.937	.128	.304	.0527	.1004
	XX	.308	.434	.0154	.275	.114	.718	.148	2.441	.064	.284	.0579	.1104
1	5S	.065	1.185	2.337	.344	.310	.255	1.103	.867	.478	.443	.0500	.0760
	10S	.109	1.097	1.589	.344	.287	.413	.945	1.404	.409	.428	.0757	.1151
	40 ST 40S	.133	1.049	1.270	.344	.275	.494	.864	1.679	.374	.420	.0874	.1329
	80 XS 80S	.179	.957	.803	.344	.250	.639	.719	2.172	.311	.407	.1056	.1606
		.219	.877	.519	.344	.230	.754	.604	2.564	.262	.395	.1178	.1791
D = 1.315	160	.250	.815	.360	.344	.213	.836	.522	2.844	.226	.387	.1252	.1903
	XX	.358	.434	.077	.344	.157	1.076	.282	3.659	.122	.361	.1405	.2137
$1^1/_4$	5S	.065	1.530	8.384	.435	.401	.326	1.839	1.108	.796	.564	.1037	.1253
	10S	.109	1.442	6.235	.434	.378	.531	1.633	1.805	.707	.550	.1605	.1934
	40 ST 40S	.140	1.380	5.005	.434	.361	.668	1.496	2.273	.648	.540	.1948	.2346
	80 XS 80S	.191	1.278	3.409	.434	.334	.881	1.283	2.997	.555	.524	.2418	.2914
D = 1.660	160	.250	1.160	2.100	.434	.304	1.107	1.057	3.766	.458	.506	.2839	.3421
	XX	.382	.896	.577	.434	.234	1.534	.630	5.215	.273	.472	.3412	.4111
$1^1/_2$	5S	.065	1.770	17.37	.497	.463	.375	2.461	1.275	1.066	.649	.158	.166
	10S	.109	1.682	13.46	.497	.440	.613	2.222	2.085	.962	.634	.247	.260
	40 ST 40S	.145	1.610	10.82	.497	.421	.799	2.036	2.718	.882	.623	.310	.326
	80 XS 80S	.200	1.500	7.59	.497	.393	1.068	1.767	3.632	.765	.605	.391	.412
D = 1.990	160	.281	1.337	4.27	.497	.350	1.431	1.404	4.866	.608	.581	.483	.508
	XX	.400	1.100	1.61	.497	.288	1.885	.950	6.409	.411	.549	.568	.598
2	5S	.065	2.245	57.03	.622	.388	.472	3.958	1.605	1.714	.817	.315	.265
	10S	.109	2.157	46.69	.622	.565	.776	3.654	2.638	1.582	.802	.499	.420
	40 ST 40S	.154	2.067	37.73	.622	541	1.074	3.356	3.653	1.453	.787	.666	.561
		.167	2.041	35.42	.622	.334	1.158	3.272	3.938	1.417	.783	.710	.598
		.188	2.000	32.00	.622	.524	1.288	3.142	4.381	1.360	.776	.777	.654
	80 XS 80S	.218	1.939	27.41	.622	.508	1.477	2.953	5.022	1.278	.766	.868	.731
D = 2.375		.250	1.875	23.17	.622	.491	1.669	2.761	5.674	1.196	.756	.955	.804
		.312	1.750	16.41	.622	.458	2.025	2.405	6.884	1.041	.738	1.102	.928
	160	.343	1.689	13.74	.622	.442	2.190	2.240	7.445	.970	.728	1.163	.979
	XX	.436	1.503	7.67	.622	.393	2.656	1.774	9.030	.768	.703	1.312	1.104
$2^1/_2$	5S	.083	2.709	145.9	.753	.709	.728	5.76	2.475	2.496	.988	.711	.495
	10S	.120	2.635	127.0	.753	.690	1.039	5.45	3.531	2.361	.975	.988	.687
	40 ST 40S	.203	2.469	91.8	.753	.646	1.704	4.79	5.794	2.073	.947	1.530	1.064
		.217	2.441	86.7	.753	.639	1.812	4.68	6.160	2.026	..943	1.611	1.121
	80 XS 80S	.279	2.323	67.6	.753	.608	2.254	4.24	7.662	1.835	.934	1.925	1.339
D = 2.875	160	.375	2.125	43.3	.753	.556	2.945	3.55	10.01	1.536	.894	2.353	.1903
	XX	.552	1.771	17.4	.753	.464	.4.028	2.46	13.70	1.067	.844	2.872	.2137
3	5S	.083	3.334	411.9	.916	873	.891	8.73	3.03	3.78	1.206	1.300	.743
	10S	.120	3.260	368.2	.916	853	1.274	8.35	4.33	3.61	1.196	1.822	1.041
		.125	3.250	362.6	.916	.851	1.325	8.30	4.51	3.59	1.194	1.890	1.080
		.148	3.204	337.6	.916	.839	1.558	8.06	5.30	3.49	1.186	2.194	1.253
D = 3.500		.188	3.124	297.6	.916	.818	1.956	7.66	6.65	3.32	1.173	2.692	1.538
	40 ST 40S	.216	3.068	271.8	.916	.803	2.228	7.39	7.58	.411	1.164	3.018	1.724

NOMINAL PIPE SIZE and OUTSIDE DIAMETER inches	SCHEDULE NUMBER and/or WEIGHT	WALL THICK-NESS inches t	INSIDE DIAM-ETER inches d	FIFTH POWER of ID in.^{5} d^5	AREAS and WEIGHTS: SURFACE AREA OUT-SIDE sq ft per ft A_o	SURFACE AREA IN-SIDE sq ft per ft A_i	Cross-Sectional METAL AREA sq in. A	Cross-Sectional FLOW AREA sq in. A_f	WEIGHT of PIPE lb per ft W	WEIGHT of WATER lb per ft W_w	RADIUS of GYRA-TION inches r_g	MOMENT of INERTIA in.^{4} I	SEC-TION MOD-ULUS in.^{3} Z
(continued)		.241	3.018	250	.916	.790	2.467	7.15	8.39	3.10	1.155	3.29	1.883
		.254	2.992	240	.916	.783	2.590	7.03	8.81	3.04	1.151	3.43	1.962
		.289	2.992	213	.916	.765	2.915	6.71	9.91	2.90	1.140	3.79	2.165
3	80 XS 80S	.300	2.900	205	.916	.759	3.016	6.60	10.25	2.86	1.136	3.90	2.226
		.312	2.875	196	.916	.753	3.129	6.49	10.64	2.81	1.132	4.01	2.294
D = 3.500		.406	2.687	140	.916	.703	3.950	5.67	13.43	2.46	1.103	4.81	2.748
	160	.438	2.624	124	.916	.687	4.213	5.41	14.33	2.34	1.094	5.04	2.879
	XX	.600	2.300	64	.916	.602	5.466	4.15	18.58	1.80	1.047	5.99	3.425
	5S	.083	3.834	828	1.047	1.004	1.021	11.55	3.47	5.00	1.385	1.98	.979
	10S	.120	3.760	752	1.047	.984	1.463	11.10	4.97	4.81	1.372	2.76	1.378
		.128	3.744	736	1.047	.980	1.557	11.01	5.29	4.77	1.370	2.92	1.461
		.134	3.732	724	1.047	.977	1.628	10.94	5.53	4.74	1.368	3.04	1.522
		.148	3.704	697	1.047	.970	1.791	10.78	6.09	4.67	1.363	3.33	1.664
3/2		.188	3.624	625	1.047	.949	2.251	10.31	7.65	4.47	1.349	4.10	2.050
	40 ST 40S	.226	3.548	562	1.047	.929	2.680	9.89	9.11	4.28	1.337	4.79	2.394
		.281	3.438	480	1.047	.900	3.283	9.28	11.16	4.02	1.319	4.71	2.855
D = 4.000	80 XS 80S	.318	3.364	431	1.047	.881	3.678	8.89	12.51	3.85	1.307	6.26	3.141
		.344	3.312	399	1.047	.867	3.951	8.62	13.43	3.73	1.298	6.66	3.331
		.468	3.062	269	1.047	.804	5.203	7.36	17.69	3.19	1.259	8.25	4.127
		.636	2.728	151	1.047	.714	6.721	5.84	22.85	2.53	1.210	9.85	4.925
	5S	0.83	4.334	1529	1.178	1.135	1.151	14.75	3.91	6.39	1.562	2.81	1.248
	10S	.120	4.260	1403	1.178	1.115	1.651	14.25	5.61	6.17	1.545	3.96	1.762
		.128	4.244	1377	1.178	1.111	1.758	14.15	5.98	6.13	1.546	4.21	1.869
		.134	4.232	1358	1.178	1.108	1.838	14.07	6.25	6.09	1.544	4.38	1.949
		.142	4.216	1332	1.178	1.104	1.944	13.96	6.61	6.04	1.542	4.62	2.054
		.165	4.170	1261	1.178	1.092	2.247	13.66	7.64	5.41	1.534	5.29	2.350
	LW	.188	4.124	1139	1.178	1.080	2.55	13.36	8.66	5.78	1.526	5.93	2.64
		.205	4.090	1144	1.178	1.071	2.77	13.14	9.40	5.69	1.520	6.39	2.84
	40 ST 40S	.237	4.026	1058	1.178	1.054	3.17	12.73	10.79	5.51	1.510	7.23	3.22
4		.250	4.000	1024	1.178	1.047	3.34	12.57	11.35	5.44	1.505	7.56	3.36
		.271	3.958	971	1.178	1.036	3.60	12.30	12.24	5.33	1.498	8.08	3.59
D = 4.500		.281	3.938	947	1.178	1.031	3.74	12.18	12.72	5.27	1.495	8.33	3.70
		.300	3.900	902	1.178	1.021	3.96	11.59	13.46	5.17	1.489	8.76	3.90
		.312	3.876	875	1.178	1.015	4.10	11.80	13.96	5.11	1.485	9.05	4.02
	80 XS 80S	.337	3.826	820	1.178	1.002	4.41	11.50	14.99	4.98	1.477	9.61	4.27
		.375	3.750	742	1.178	.982	4.86	11.04	16.52	4.78	1.464	10.42	4.63
	120	.438	3.624	625	1.178	.949	5.59	10.31	19.00	4.47	1.444	11.66	5.13
		.500	3.500	525	1.178	.916	6.28	9.62	21.36	4.17	1.425	12.77	5.67
	160	.531	3.438	480	1.178	.900	6.62	9.23	22.51	4.02	1.416	13.27	5.90
	XX	.674	3.152	341	1.178	.825	8.10	7.80	27.54	3.38	1.374	15.29	6.79
	5S	.109	5.345	4363	1.456	1.399	1.88	22.43	6.38	9.71	1.928	6.97	2.51
	10S	.134	5.295	4162	1.456	1.386	2.29	22.02	7.77	9.56	1.920	8.43	3.03
	40 ST 40S	.258	5.047	3275	1.456	1.321	4.30	20.01	14.62	8.66	1.878	15.17	5.45
		.352	4.859	2708	1.456	1.272	5.76	18.54	19.59	8.03	1.847	19.65	7.07
5	80 XS 80S	.375	4.813	2583	1.456	1.260	6.11	18.19	20.78	7.88	1.839	20.68	7.43
		.438	4.688	2264	1.456	1.227	7.04	17.26	23.95	7.47	1.819	23.31	8.38
D = 5.563	120	.500	4.563	1978	1.456	1.194	7.95	16.35	27.04	7.06	1.799	25.74	9.25
	160	.625	4.313	1492	1.456	1.129	9.70	14.61	32.07	6.33	1.760	30.03	10.28
	XX	.750	4.063	1107	1.456	1.064	11.34	12.97	38.55	5.61	1.722	33.64	12.10

NOMINAL PIPE SIZE and OUTSIDE DIAMETER inches	SCHEDULE NUMBER and/or WEIGHT	WALL THICK-NESS inches t	INSIDE DIAM-ETER inches d	FIFTH POWER of ID Million in.^{5} d^5	AREA and WEIGHTS: SURFACE AREA OUT-SIDE sq ft per ft A_o	SURFACE AREA IN-SIDE sq ft per ft A_i	Cross-Sectional METAL AREA sq in. A	Cross-Sectional FLOW AREA sq in. A_f	WEIGHT of PIPE lb per ft w	WEIGHT of WATER lb per ft W_w	RADIUS of GYRA-TION inches r_g	MOMENT of INERTIA in.^{4} I	SEC-TION MOD-ULUS in.^{3} Z
6 D =6.625	5S	.109	6.407	10.80	1.734	1.677	2.23	32.2	7.58	13.96	2.304	11.84	3.58
	10S	.134	6.357	10.38	1.734	1.664	2.73	31.7	9.29	13.74	2.295	14.40	4.35
		.156	6.312	10.02	1.734	1.652	3.18	31.3	10.81	13.55	2.288	16.65	5.03
		.169	6.287	9.82	1.734	1.646	3.43	31.0	11.66	13.44	2.283	17.87	5.40
		.180	6.265	9.65	1.734	1.640	3.64	30.8	12.39	13.35	2.280	18.94	5.72
		.188	6.249	9.53	1.734	1.636	3.80	30.7	12.93	13.28	2.277	19.71	5.95
	LW	.219	6.187	9.07	1.734	1.620	4.41	30.1	14.99	13.02	2.266	22.64	6.83
		.250	6.125	8.62	1.734	1.604	5.01	29.5	17.02	12.75	2.256	25.5	7.69
		.277	6.071	8.25	1.734	1.589	5.52	28.9	18.78	12.53	2.246	27.9	8.42
	40 ST 40S	.280	6.065	8.21	1.734	1.588	5.58	28.9	18.98	12.51	2.246	28.1	8.50
		.375	5.875	7.00	1.734	1.538	7.36	27.1	25.04	11.73	2.214	36.1	10.90
	80 XS 80S	.432	5.761	6.35	1.734	1.508	8.40	26.1	28.58	11.29	2.195	40.5	12.23
		.500	5.625	5.63	1.734	1.473	9.62	24.9	32.71	10.76	2.173	45.4	13.71
	120	.562	5.501	5.04	1.734	1.440	10.70	23.8	36.40	10.29	2.153	49.6	14.98
	160	.718	5.189	3.76	1.734	1.358	13.32	21.1	45.30	9.16	2.104	59.0	17.81
	XX	.864	4.897	2.82	1.734	1.282	15.64	18.8	53.17	8.16	2.060	66.3	20.03
8 D = 8.625	5S	.109	8.407	42.0	2.258	2.201	2.92	55.5	9.91	24.04	3.01	26.4	6.13
	10S	.148	8.329	40.1	2.258	2.180	3.94	54.5	13.40	23.59	3.00	35.4	8.21
		.158	8.309	39.6	2.258	2.175	4.20	54.2	14.29	23.48	2.99	37.7	8.74
		.165	8.295	39.3	2.258	2.172	4.39	54.0	14.91	23.40	2.99	39.3	9.10
		.188	8.249	38.2	2.258	2.160	4.98	53.4	16.94	23.14	2.98	44.4	10.29
		.203	8.219	37.5	2.258	2.152	5.37	53.1	18.26	22.97	2.98	47.7	11.05
	LW	.219	8.187	36.8	2.258	2.143	5.78	52.6	19.66	22.94	2.97	51.1	11.86
		.238	8.149	35.9	2.258	2.133	6.27	52.2	21.32	22.58	2.97	55.2	12.80
	20	.250	8.125	35.4	2.258	2.127	6.58	51.8	22.37	22.45	2.96	57.7	13.39
	30	.277	8.071	34.2	2.258	2.113	7.26	51.2	24.70	22.15	2.95	63.4	14.69
	40 ST 40S	.322	7.981	32.4	2.258	2.089	8.40	50.0	28.56	21.68	2.94	72.5	16.81
		.344	7.937	31.5	2.258	2.078	8.95	49.5	30.43	21.42	2.93	76.9	17.82
		.352	7.921	31.2	2.258	2.074	9.15	49.3	31.1	21.3	2.93	78.4	18.19
		.375	7.875	30.3	2.258	2.062	9.72	48.7	33.0	21.1	2.92	82.9	19.22
	60	.406	7.813	29.1	2.258	2.045	10.48	47.9	35.6	20.8	2.91	88.8	20.58
		.469	7.687	26.8	2.258	2.012	12.02	46.4	40.9	20.1	2.89	100.3	23.25
	80 XS 80S	.500	7.625	25.8	2.258	1.996	12.76	45.7	43.4	19.8	2.88	105.7	24.52
	100	.593	7.439	22.8	2.258	1.948	14.96	43.5	SO.9	18.8	2.85	121.4	28.14
		.625	7.375	21.8	2.258	1.931	15.71	42.7	53.4	18.5	2.84	126.5	29.32
	120	.718	7.189	19.2	2.258	1.882	17.84	40.6	60.6	17.6	2.81	140.6	32.60
	140	.812	7.001	16.8	2.258	1.833	19.93	38.5	67.8	16.7	2.78	153.7	35.63
	XX	.875	6.875	15.4	2.258	1.800	21.30	37.1	72.4	16.1	2.76	162.0	37.57
	160	.906	6.813	14.7	2.258	1.784	21.97	36.5	74.7	15.8	2.75	165.9	38.48
10 D = 10.750	5S	.134	10.482	127	2.81	2.74	4.47	86.3	15.2	37.4	3.75	63.0	11.72
	10S	.165	10.420	123	2.81	2.73	5.49	85.3	18.7	36.9	3.74	76.9	14.30
		.188	10.374	120	2.81	2.72	6.24	84.5	21.2	36.6	3.73	87.0	16.19
		.203	10.344	118	2.81	2.71	6.73	84.0	22.9	36.4	3.73	93.6	17.41
	LW	.219	10.310	116	2.81	2.70	7.28	83.5	24.7	36.1	3.72	100.9	18.78
	20	.250	10.250	113	2.81	2.68	8.25	82.5	28.0	35.7	3.71	113.7	21.16
		.279	10.192	110	2.81	2.67	9.18	81.6	31.2	35.3	3.70	125.9	23.42
	30	.307	10.136	107	2.81	2.65	10.07	80.7	34.2	34.9	3.69	137.5	25.57
		.348	10.054	103	2.81	2.63	11.37	79.4	38.7	34.4	3.68	154.0	28.66
	40 ST 40S	.365	10.020	101	2.81	2.62	11.91	78.9	40.5	34.1	3.67	160.8	29.91

NOMINAL PIPE SIZE and OUTSIDE DIAMETER inches	SCHEDULE NUMBER and/or WEIGHT	WALL THICK-NESS inches t	INSIDE DIAM-ETER inches d	FIFTH POWER of ID Million in.^{5} d^5	AREA and WEIGHTS: SURFACE AREA OUT-SIDE sq ft per ft A_o	SURFACE AREA IN-SIDE sq ft per ft A_i	Cross-Sectional METAL AREA sq in. A	Cross-Sectional FLOW AREA sq in. A_f	WEIGHT of PIPE lb per ft w	WEIGHT of WATER lb per ft W_w	RADIUS of GYRA-TION inches r_g	MOMENT of INERTIA in.^{4} I	SEC-TION MOD-ULUS in.^{3} Z
(continued)		.395	9.960	98.0	2.81	2.61	12.85	77.9	43.7	33.7	3.66	172.5	32.1
	60 XS 80S	.500	9.750	88.1	2.81	2.55	16.10	74.7	54.7	32.3	3.63	212.0	39.4
		.531	9.687	85.3	2.81	2.54	17.06	73.7	58.0	31.9	3.62	223.4	41.6
	80	.593	9.564	80.0	2.81	2.50	18.92	71.8	64.3	31.1	3.60	244.8	45.5
10	100	.718	9.314	70.1	2.81	2.44	22.63	68.1	76.9	29.5	3.56	286.2	53.2
D = 10.750		.750	9.250	67.7	2.81	2.42	23.56	67.2	80.1	29.1	3.55	296.3	55.1
	120	.843	9.064	61.2	2.81	2.37	26.24	64.5	89.2	27.9	3.52	324.3	60.3
	140	1.000	8.750	51.3	2.81	2.29	30.63	60.1	104.1	26.0	3.47	367.9	68.4
		1.062	8.625	47.7	2.81	2.26	32.33	58.4	109.9	25.3	3.45	384.0	71.4
	160	1.125	8.500	44.4	2.81	2.23	34.02	56.7	115.7	24.6	3.43	399.4	74.3
	5S	.156	12.438	298	3.34	3.26	6.17	121.5	21.0	52.6	4.45	122.4	19.2
	10S	.180	12.390	292	3.34	3.24	7.11	120.6	24.2	52.2	4.44	140.5	22.0
		.203	12.344	287	3.34	3.23	8.00	119.7	27.2	51.8	4.44	157.5	24.7
		.219	12.312	283	3.34	3.22	8.62	119.1	29.3	51.6	4.43	169.3	26.6
		.238	12.274	279	3.34	3.21	9.36	118.3	31.8	51.2	4.42	183.2	28.7
	20 LW	.250	12.250	276	3.34	3.21	9.82	117.9	33.4	51.0	4.42	191.9	30.1
		.279	12.192	269	3.34	3.19	10.93	116.7	37.2	50.6	4.41	212.7	33.4
		.300	12.150	265	3.34	3.18	11.73	115.9	39.9	50.2	4.40	227.5	35.7
	30	.330	12.090	258	3.34	3.17	12.88	114.8	43.8	49.7	4.39	248.5	39.0
		.344	12.062	255	3.34	3.16	13.41	114.3	45.6	49.5	4.39	258	40.5
12	ST 40S	.375	12.000	249	3.34	3.14	14.58	113.1	49.6	49.0	4.38	279	43.8
D = 12.750	40	.406	11.938	242	3.34	3.13	15.74	111.9	53.5	48.5	4.37	300	47.1
		.438	11.874	236	3.34	3.11	16.94	110.7	57.6	47.9	4.36	321	50.4
	XS 80S	.500	11.750	224	3.34	3.08	19.24	108.4	65.4	47.0	4.33	362	56.7
	60	.562	11.626	212	3.34	3.04	21.52	106.2	73.2	46.0	4.31	401	62.8
		.625	11.500	201	3.34	3.01	23.81	103.9	80.9	45.0	4.29	439	68.8
	80	.687	11.376	191	3.34	2.98	26.04	101.6	88.5	44.0	4.27	475	74.5
	100	.843	11.064	166	3.34	2.90	31.53	96.1	107.2	41.6	4.22	562	88.1
		.875	11.000	161	3.34	2.88	32.64	95.0	111.0	41.1	4.21	579	90.8
	120	1.000	10.750	144	3.34	2.81	36.91	90.8	125.5	39.3	4.17	642	100.7
	140	1.125	10.500	128	3.34	2.75	41.09	86.6	139.7	37.5	4.13	701	109.9
		1.219	10.313	117	3.34	2.70	44.14	83.5	150.1	36.2	4.10	742	116.4
	160	1.312	10.126	106	3.34	2.65	47.14	80.5	160.3	34.9	4.07	781	122.6
	5S	.156	13.688	481	3.67	3.58	6.78	147.2	23.1	63.7	4.90	163	23.2
	10S	.188	13.624	469	3.67	3.57	8.16	145.8	27.7	63.1	4.88	195	27.8
		.210	13.580	462	3.67	3.56	9.10	144.8	30.9	62.7	4.88	216	30.9
		.220	13.560	458	3.67	3.55	9.52	144.4	32.4	62.5	4.87	226	32.3
		.238	13.524	452	3.67	3.54	10.29	143.6	35.0	62.2	4.87	244	34.8
	10*	.250	13.500	448	3.67	3.53	10.80	143.1	36.7	62.0	4.86	255	36.5
	20	.312	13.375	428	3.67	3.50	13.44	140.5	45.7	60.8	4.84	3'5	45.0
14	30 ST	.375	13.250	408	3.67	3.47	16.05	137.9	54.6	59.7	4.82	373	53.3
D = 14.000		.406	13.188	399	3.67	3.45	17.34	136.6	59.0	59.1	4.81	401	57.3
	40	.438	13.125	389	3.67	3.44	18.66	135.3	63.4	58.6	4.80	429	61.4
		.469	13.062	380	3.67	3.42	19.94	134.0	67.8	58.0	4.79	457	65.3
	XS	.500	13.000	371	3.67	3.40	21.21	132.7	72.1	57.5	4.78	484	69.1
	60	.593	12.814	345	3.67	3.35	24.98	129.0	84.9	55.8	4.74	562	80.3
		.625	12.750	337	3.67	3.34	26.26	127.7	89.3	55.3	4.73	589	84.1
		.656	12.688	329	3.67	3.32	27.50	126.4	93.5	54.8	4.72	614	87.7

* In sizes 14" thru 24", Sch. 10 is also known as light weight.

NOMINAL PIPE SIZE and OUTSIDE DIAMETER inches	SCHEDULE NUMBER and/or WEIGHT	WALL THICK-NESS inches t	INSIDE DIAM-ETER inches d	FIFTH POWER of ID Million in.^{5} d^5	AREA and WEIGHTS: SURFACE AREA OUT-SIDE sq ft per ft A_o	SURFACE AREA IN-SIDE sq ft per ft A_i	Cross-Sectional METAL AREA sq in. A	Cross-Sectional FLOW AREA sq in. A_f	WEIGHT of PIPE lb per ft w	WEIGHT of WATER lb per ft W_w	RADIUS of GYRA-TION inches r_g	MOMENT of INERTIA in.^{4} I	SEC-TION MOD-ULUS in.^{3} Z
(continued)	80	.750	12.500	305	3.67	3.27	31.22	122.7	106.1	53.1	4.69	687	98.2
	100	.937	12.125	262	3.67	3.17	38.47	115.5	130.8	50.0	4.63	825	117.9
14	120	1.093	11.814	230	3.67	3.09	44.32	109.6	150.7	47.5	4.58	930	132.8
D = 14.000	140	1.250	11.500	201	3.67	3.01	50.07	103.9	170.2	45.0	4.53	1027	146.8
		1.344	11.313	185	3.67	2.96	53.42	100.5	181.6	43.5	4.50	1082	154.6
	160	1.406	11.188	175	3.67	2.93	55.63	98.3	189.1	42.6	4.48	1117	159.6
	5S	.169	15.670	945	4.19	4.10	8.21	192.9	27.9	83.5	5.60	257	32.2
	10S	.188	15.624	931	4.19	4.09	9.34	191.7	31.8	83.0	5.59	292	36.5
		.219	15.562	913	4.19	4.07	10.86	190.2	36.9	82.4	5.58	338	42.3
		.238	15.524	902	4.19	4.06	11.78	189.3	40.1	82.0	5.57	366	45.8
	10	.250	15.500	895	4.19	4.06	12.37	188.7	42.1	81.7	5.57	384	48.0
		.281	15.438	877	4.19	4.04	13.88	187.2	47.2	81.1	5.56	429	53.6
	20	.312	15.375	859	4.19	4.02	15.40	185.7	52.4	80.4	5.55	474	59.3
		.344	15.312	842	4.19	4.01	16.92	184.1	57.5	79.7	5.54	519	64.8
	30 ST	.375	15.250	825	4.19	3.99	18.41	182.7	62.6	79.1	5.53	562	70.3
		.406	15.188	808	4.19	3.98	19.89	181.2	67.6	78.4	5.52	605	75.6
		.438	15.124	791	4.19	3.96	21.41	179.6	72.8	77.8	5.50	649	81.1
10		.469	15.062	775	4.19	3.94	22.88	178.2	77.8	77.2	5.49	691	86.3
D-16.000	40 XS	.500	15.000	759	4.19	3.93	24.35	176.7	82.8	76.5	5.48	732	91.5
		.531	14.938	744	4.19	3.91	25.81	175.3	87.7	75.9	5.47	773	96.6
	60	.656	14.688	684	4.19	3.85	31.62	169.4	107.5	73.4	5.43	933	116.6
		.688	14.625	669	4.19	3.83	33.07	168.0	112.4	72.7	5.42	972	121.4
		.750	14.500	641	4.19	3.80	35.90	165.1	127.5	71.5	5.40	1047	130.9
	80	.843	14.314	601	4.19	3.75	40.14	160.9	136.5	69.7	5.37	1157	144.6
	100	1.031	13.938	526	4.19	3.65	48.48	152.6	164.8	66.1	5.29	1365	170.6
	120	1.218	13.564	459	4.19	3.55	56.56	144.5	192.3	62.6	5.23	1556	194.5
	140	1.438	13.124	389	4.19	3.44	65.79	135.3	223.7	58.6	5.17	1761	220.1
		1.500	13.000	371	4.19	3.40	68.33	132.7	232.3	57.5	5.15	1815	226.9
	160	1.593	12.814	345	4.19	3.35	72.10	129.0	245.1	55.8	5.12	1894	236.7
	5S	.165	17.670	1723	4.71	4.63	9.24	245.2	31.4	106.2	6.31	368	40.9
	10S	.188	17.624	1700	4.71	4.61	10.52	243.9	35.8	105.6	6.30	417	46.4
	10	.250	17 500	1641	4.71	4.58	13.94	240.5	47.4	104.1	6.28	549	61.0
	20	.312	17.375	1584	4.71	4.55	17.36	237.1	59.0	102.7	6.25	679	75.5
	ST	.375	17.250	1527	4.71	4.52	20.76	233.7	70.6	101.2	6.23	807	89.6
	30	.438	17.124	1472	4.71	4.48	24.17	230.3	82.2	99.7	6.21	932	103.6
	XS	.500	17.000	1420	4.71	4.45	27.49	227.0	93.5	98.3	6.19	1053	117.0
	40	.562	16.876	1369	4.71	4.42	30.79	223.7	104.7	96.9	6.17	1171	130.2
		.594	16.813	1344	4.71	4.40	32.46	222.0	110.4	96.1	6.16	1231	136.8
18		.625	16.750	1318	4.71	4.39	34.12	220.4	116.0	95.4	6.15	1289	143.3
D = 18.000		.719	16.562	1247	4.71	4.34	38.98	215.S	132.5	93.3	6.12	1458	162.0
	60	.750	16.500	1223	4.71	4.32	40.64	213.8	138.2	92.6	6.10	1515	168.3
		.812	16.375	1177	4.71	4.29	43.87	210.6	149.2	91.2	6.08	1624	180.5
	80	.937	16.126	1090	4.71	4.22	50.23	204.2	170.8	88.4	6.04	1834	203.8
	100	1.156	15.688	950	4.71	4.11	61.17	193.3	208.0	83.7	5.97	2180	242.2
	120	1.375	15.250	825	4.71	3.99	71.81	182.7	244.2	79.1	5.90	2498	277.6
	140	1.562	14.876	728	4.71	3.89	80.66	173.8	274.3	75.3	5.84	2750	305.5
		1.688	14.625	669	4.71	3.83	86.48	168.0	294.0	72.7	5.80	2908	323.1
	160	1.781	14.438	627	4.71	3.78	90.75	163.7	308.5	70.9	5.77	3020	335.6

NOMINAL PIPE SIZE and OUTSIDE DIAMETER inches	SCHEDULE NUMBER and/or WEIGHT	WALL THICK-NESS inches t	INSIDE DIAM-ETER inches d	FIFTH POWER of ID Million in.^{5} d^5	AREA and WEIGHTS: SURFACE AREA OUT-SIDE sq ft per ft A_o	SURFACE AREA IN-SIDE sq ft per ft A_i	Cross-Sectional METAL AREA sq in. A	Cross-Sectional FLOW AREA sq in. A_f	WEIGHT of PIPE lb per ft w	WEIGHT of WATER lb per ft W_w	RADIUS of GYRA-TION inches r_g	MOMENT of INERTIA in.^{4} I	SEC-TION MOD-ULUS in.^{3} Z
32		.312	31.376	30.4	8.38	8.21	31.1	773	105.6	334.8	11.20	3900	244
D = 32.000	ST	.375	31.250	29.8	8.38	8.18	37.3	767	126.7	332.1	11.18	4660	291
		.438	31.124	29.2	8.38	8.15	43.4	761	147.7	329.4	11.16	5410	338
	XS	.500	31.000	28.6	8.38	8.12	49.5	755	168.2	326.8	11.14	6140	384
		.562	30.876	28.1	8.38	8.08	55.5	749	188.7	324.2	11.12	6861	429
		.625	30.750	27.5	8.38	8.05	61.6	743	209.5	321.6	11.10	7585	474
		.656	30.688	27.2	8.38	8.03	64.6	740	219.6	320.3	11.08	7938	496
		.750	30.500	26.4	8.38	7.98	73.6	731	250.3	316.4	11.05	8995	562
		.812	30.376	25.9	8.38	7.95	79.6	725	270.5	313.8	11.03	9682	605
		.875	30.250	25.3	8.38	7.92	85.6	719	290.9	311.2	11.01	10371	648
		.938	30.124	24.8	8.38	7.89	91.5	713	311.2	308.6	10.99	11052	691
		1.000	30.000	24.3	8.38	7.85	97.4	707	331.1	306.1	10.97	11714	732
34		.312	33.376	41.4	8.90	8.74	33.0	875	112.3	378.8	11.91	4686	276
D =34.000	ST	.375	33.250	40.6	8.90	8.70	39.6	868	134.7	376.0	11.89	5599	329
		.438	33.124	39.9	8.90	8.67	46.2	862	157.0	373.1	11.87	6505	383
	XS	.500	33.000	39.1	8.90	8.64	52.6	855	178.9	370.3	11.85	7383	434
		.562	32.876	38.4	8.90	8.61	59.0	849	200.7	367.6	11.82	8256	486
		.625	32.750	37.7	8.90	8.57	65.5	842	222.8	364.8	11.80	9130	537
		.656	32.688	37.3	8.90	8.56	68.7	839	233.6	363.4	11.79	9556	562
		.750	32.500	36.3	8.90	8.51	78.3	830	266.4	359.2	11.76	10835	637
		.812	32.376	35.6	8.90	8.48	84.7	823	287.9	356.5	11.74	11666	686
		.875	32.250	34.9	8.90	8.44	91.1	817	309.6	353.7	11.72	12501	735
		.938	32.124	34.2	8.90	8.41	97.4	810	331.3	350.9	11.69	13326	784
		1.000	32.000	33.6	8.90	8.38	103.7	804	352.5	348.2	11.67	14129	831
36		.312	35.376	55.4	9.42	9.26	35.0	983	118.9	425.6	12.62	5571	310
D =36.000	ST	.375	35.250	54.4	9.42	9.23	42.0	976	142.7	422.6	12.60	6659	370
		.438	35.124	53.5	9.42	9.20	48.9	969	166.4	419.6	12.57	7739	430
	XS	.500	35.000	52.5	9.42	9.16	55.8	962	189.6	416.6	12.55	8786	488
		.562	34.876	51.6	9.42	9.13	62.6	955	212.7	413.6	12.53	9827	546
		.625	34.750	50.7	9.42	9.10	69.5	948	236.2	410.7	12.51	10871	604
		.656	34.688	50.2	9.42	9.08	72.8	945	247.7	409.2	12.50	11381	633
		.750	34.500	48.9	9.42	9.03	83.1	935	282.4	404.8	12.46	12909	717
		.812	34.376	48.0	9.42	9.00	89.8	928	305.2	401.9	12.44	13904	772
		.875	34.250	47.1	9.42	8.97	96.6	921	328.3	398.9	12.42	14904	828
		.938	34.124	46.3	9.42	8.93	103.3	915	351.3	396.0	12.40	15893	883
		1.000	32.000	45.4	9.42	8.90	110.0	908	373.9	393.1	12.38	16855	936
42		.312	41.376	121.3	11.0	10.83	40.9	1345	138.9	582.2	14.74	8879	423
D = 42.000	ST	.375	41.250	119.4	11.0	10.80	49.0	1336	166.7	578.7	14.72	10621	506
		.438	41.124	117.6	11.0	10.77	57.2	1328	194.4	575.1	14.67	12353	588
	XS	.500	41.000	115.9	11.0	10.73	65.2	1320	221.6	571.7	14.67	14037	668
		.562	40.876	114.1	11.0	10.70	73.2	1312	248.7	568.2	14.65	15710	748
		.625	40.750	112.4	11.0	10.67	81.2	1304	276.2	564.7	14.64	17393	828
		.656	40.688	111.5	11.0	10.65	85.2	1300	289.7	563.0	14.62	18215	867
		.750	40.500	109.0	11.0	10.60	97.2	1288	330.5	557.8	14.59	20685	985
		.812	40.376	107.3	11.0	10.57	105.1	1280	357.2	554.4	14.56	22295	1062
		.875	40.250	105.6	11.0	10.54	113.0	1272	384.4	550.9	14.54	23916	1139
		.938	40.124	104.0	11.0	10.50	121.0	1264	411.4	547.5	14.52	25522	1215
		1.000	40.000	102.4	11.0	10.47	128.8	1257	437.9	544.1	14.50	27088	1290
48	ST	.375	47.250	235.5	12.56	12.37	56.10	1753	190.8	759.2	16.84	15912	663
D = 48.000	XS	.500	47.000	229.3	12.56	12.30	74.61	1735	253.7	751.2	16.79	21051	877

DESIGN PROPERTIES FOR API 5L AND API 5LX PIPE

NOMINAL PIPE SIZE and OUTSIDE DIAMETER inches	API SPECIFICATION NUMBER	WALL THICKNESS inches t	INSIDE DIAMETER inches d	FIFTH POWER of ID * in.^{5} d^5	AREA and WEIGHTS: SURFACE AREA OUTSIDE sq ft per ft A_o	SURFACE AREA INSIDE sq ft per ft A_i	Cross-Sectional METAL AREA sq in. A	Cross-Sectional FLOW AREA sq in. A_f	WEIGHT of PIPE lb per ft w	WEIGHT of WATER lb per ft W_w	RADIUS of GYRATION inches r_g	MOMENT of INERTIA in.^{4} I	SECTION MODULUS in.^{3} Z
2 D = 2.375	5L	0.083	2.290	52.60	.622	.578	.598	3.83	2.03	1.66	.81	.393	.33
3 D = 3.500	5L	0.156	3.188	328.5	.916	.835	1.639	7.98	5.57	3.46	1.18	2.30	1.31
	5L	0.250	3.000	243	.916	.785	2.553	7.07	8.68	3.06	1.15	3.39	1.94
	5L	0.281	2.938	218.9	.916	.769	2.842	6.78	9.66	2.94	1.14	3.71	2.12
3½ D = 4.000	5L	0.125	3.750	741.6	1.047	.982	1.521	11.05	5.17	4.78	1.37	2.86	1.43
	5L	0.156	3.688	682.3	1.047	.966	1.884	1.68	6.41	4.63	1.36	3.49	1.74
	5L	0.250	3.50	525.2	1.047	.916	2.945	9.62	1.01	4.17	1.33	5.20	2.60
4 D = 4.500	5L	0.125	4.250	1387	1.178	1.113	1.931	13.97	6.57	6.05	1.54	4.59	2.04
	5L	0.156	4.188	1288	1.178	1.096	2.129	13.78	7.24	5.97	1.54	5.03	2.24
	5L	0.172	4.156	1240	1.178	1.088	2.339	13.57	7.95	5.87	1.53	5.49	2.44
	5L	0.219	4.062	1106	1.178	1.063	2.950	12.96	1.01	5.61	1.52	6.77	3.01
5 D = 5.563	5L	0.083	5.397	4579	1.456	1.413	1.420	22.88	4.83	9.91	1.94	5.33	1.92
	5L	0.156	5.251	3992	1.456	1.375	2.641	21.66	8.98	9.38	1.91	9.66	3.47
	5L	0.188	5.187	3755	1.456	1.358	3.166	2.13	1.76	9.15	1.90	11.45	4.12
	5L	0.219	5.125	3536	1.456	1.342	3.666	2.63	12.46	8.93	1.89	13.11	4.72
	5L	0.281	5.001	3128	1.456	1.309	4.654	19.64	15.82	8.51	1.87	16.28	5.85
	5L	0.312	4.939	2939	1.456	1.293	4.714	19.16	16.03	8.30	1.86	17.77	6.39
	5L	0.344	4.875	2753	1.456	1.276	5.631	18.67	19.15	8.08	1.85	19.26	6.92
6 D = 8.625	5L	0.083	6.459	11.20T	1.734	1.691	1.706	32.77	5.80	14.19	2.31	9.13	2.76
	5L	0.125	6.375	10.50T	1.734	1.669	2.553	31.92	8.68	13.82	2.30	13.49	4.07
	5L	0.141	6.343	11.30T	1.734	1.661	2.872	31.60	9.77	13.68	2.29	15.11	4.56
	5L	0.172	6.281	9.78T	1.734	1.644	3.487	30.99	11.86	13.42	2.28	18.17	5.49
	5L	0.230	6.219	9.30T	1.734	1.628	4.096	30.38	13.93	13.15	2.27	21.14	6.38
	5L	0.312	6.001	7.78T	1.734	1.571	6.188	28.28	21.04	12.25	2.24	30.91	9.33
	5L	0.344	5.937	7.38T	1.734	1.554	6.788	27.68	23.08	11.99	2.22	33.58	10.13
	5L	0.625	5.375	4.49T	1.734	1.407	11.781	22.69	40.06	9.83	2.13	53.60	16.18
8 D = 8.625	5L	0.312	8.001	32.8T	2.258	2.095	8.149	50.28	27.71	21.77	2.94	70.50	16.35
	5L	0.438	7.749	27.9T	2.258	2.029	11.266	47.16	38.30	20.42	2.90	94.68	21.96
	5L	0.562	7.501	23.7T	2.258	1.964	14.236	44.19	48.40	19.14	2.86	116.3	26.96
10 D = 10.750	5L	0.344	1.062	103.0T	2.81	2.63	11.246	79.52	38.24	34.43	3.68	152.43	28.36
	5L	0.438	9.874	93.9T	2.81	2.59	14.190	76.57	48.25	33.16	3.65	189.0	35.16
	5L	0.562	9.626	82.6T	2.81	2.52	17.988	72.78	61.16	31.51	3.61	234.2	43.56
	5L	0.625	9.50	77.4T	2.81	2.48	19.881	70.88	67.60	30.69	3.59	255.8	47.59
	5L	0.812	9.126	63.3T	2.81	2.39	25.352	65.41	86.20	28.32	3.53	315.1	58.63
12 D = 12.750	5L	0.188	12.374	290T	3.34	3.24	7.420	12.36	25.22	52.07	4.44	146.4	22.97
	5L	0.312	12.126	262T	3.34	3.17	12.192	115.49	41.45	50.00	4.40	236.0	37.01
	5L	0.750	11.250	180T	3.34	2.95	28.275	99.40	96.14	43.04	4.25	511.1	80.17
14 D = 14.000	5L	0.281	13.438	438T	3.67	3.52	12.111	141.8	41.18	61.41	4.85	285.1	40.73
	5L	0.344	13.312	418T	3.67	3.49	14.758	139.9	50.18	60.27	4.83	344.3	49.19
	5L	0.562	12.876	354T	3.67	3.37	23.726	130.2	80.67	56.38	4.76	537	76.66
	5L	0.688	12.624	321T	3.67	3.30	28.773	125.2	97.83	54.20	4.71	639	91.32
	5L	0.812	12.376	290T	3.67	3.24	33.643	12.3	114.39	52.09	4.67	734	104.90
16 D - 1A 000	5LX	0.230	15.594	922T	4.19	4.08	10.070	191.0	34.30	82.70	5.58	314	39.30
	5L	0.562	14.876	729T	4.19	3.89	27.260	173.8	92.67	75.26	5.46	813	101.70
	5L	0.625	14.750	698T	4.19	3.86	30.190	170.9	12.60	73.99	5.44	894	111.70
	5L	0.812	14.376	614T	4.19	3.76	38.745	162.3	131.70	70.28	5.38	1121	140.10
18 D = 18.000	5LX	0.219	17.562	1671T	4.71	4.60	12.230	242.2	41.60	104.9	6.29	484	53.70
	5L	0.281	17.438	1612T	4.71	4.57	15.642	238.8	53.18	103.4	6.27	614	68.24
	5L	0.344	17.312	1555T	4.71	4.53	19.081	235.4	64.88	101.9	6.24	744	82.67
	5LX	0.406	17.188	1500T	4.71	4.50	22.410	232.0	76.30	100.5	6.22	869	96.60
	5LX	0.469	17.062	1446T	4.71	4.47	25.830	229.0	87.80	99.0	6.20	993	110.40
20 D = 20.000	5L	0.281	19.438	2775T	5.24	5.09	17.408	296.8	59.19	128.5	6.97	846	84.65
	5L	0.344	19.312	2686T	5.24	5.06	21.243	292.9	72.23	126.8	6.95	1026	102.60
	5LX	0.406	19.188	260 IT	5.24	5.02	25.000	289.2	85.00	125.2	6.93	1200	120.00
	5LX	0.469	19.062	2517T	5.24	4.99	28.780	285.4	97.80	123.6	6.91	1373	137.30
	5L	0.688	18.624	2241T	5.24	4.88	41.742	272.4	141.92	117.9	6.83	1949	194.90
	5L	0.750	18.500	2167T	5.24	4.84	45.357	268.8	154.20	116.4	6.81	2105	210.50

DESIGN PROPERTIES FOR API 5L AND API 5LX PIPE *(Continued)*

NOMINAL PIPE SIZE and OUTSIDE DIAMETER inches	API SPECIFI-CATION NUMBER	WALL THICK-NESS inches t	INSIDE DIAM-ETER inches d	FIFTH POWER of ID * in.^{5} d^5	AREA and WEIGHTS: SURFACE AREA OUT-SIDE sq ft per ft A_o	SURFACE AREA IN-SIDE sq ft per ft A_i	Cross-Sectional METAL AREA sq in. A	Cross-Sectional FLOW AREA sq in. A_f	WEIGHT of PIPE lb per ft w	WEIGHT of WATER lb per ft W_w	RADIUS of GYRA-TION inches r_g	MOMENT of INERTIA in.^{4} I	SEC-TION MOD-ULUS in.^{3} Z
22 D = 22.000	5LX	.219	21.562	4661T	5.76	5.65	14.99	365.1	50.9	158.1	7.70	889	80.8
	5L	.281	21.438	4528T	5.76	5.61	19.17	360.9	65.1	156.3	7.68	1131	102.8
	5L	.344	21.312	4397T	5.76	5.58	23.40	356.7	79.6	154.5	7.66	1373	124.8
	5LX	.406	21.188	4270T	5.76	5.55	27.54	352.6	93.6	152.7	7.64	1606	146.0
	5L	.438	21.124	4206T	5.76	5.53	29.67	350.5	100.9	151.7	7.63	1725	156.9
	5LX	.469	21.062	4145T	5.76	5.51	31.72	348.4	107.9	150.9	7.61	1840	167.2
	5L	.562	20.876	3965T	5.76	5.47	37.85	342.3	128.7	148.2	7.58	2177	197.9
	5L	.688	20.624	3777T	5.76	5.40	46.06	334.1	156.6	144.7	7.54	2619	238.1
	5L	.812	20.376	3512T	5.76	5.33	54.05	326.1	183.8	141.2	7.50	3038	276.2
24 D = 24.000	5L	.281	23.438	7073T	6.28	6.14	20.94	431.5	71.2	186.8	8.39	1473	122.8
	5L	.344	23.312	6885T	6.28	6.10	25.57	426.8	86.9	184.8	8.37	1789	149.1
	5LX	.406	23.188	6704T	6.28	6.07	30.09	422.3	102.3	182.9	8.34	2095	174.6
	5LX	.469	23.062	6524T	6.28	6.04	34.67	417.7	117.9	180.9	8.32	2401	200.1
	5L	.812	22.376	5609T	6.28	5.86	59.15	393.2	201.1	170.3	8.20	3982	331.8
26 D = 26.000	5L	.250	25.500	10.80M	6.81	6.68	20.22	510.7	68.8	221.1	9.10	1677	128.9
	5L	.281	25.438	10.70M	6.81	6.66	22.70	508.2	77.2	220.1	9.09	1878	144.5
	5L	.344	25.312	10.40M	6.81	6.63	27.73	503.2	94.3	217.9	9.07	2282	175.6
	5LX	.406	25.188	10.13M	6.81	6.59	32.65	498.3	111.0	215.8	9.05	2674	205.7
	5LX	.469	25.062	9.89M	6.81	6.56	37.62	493.3	127.9	213.6	9.03	3067	235.9
	5L	.688	24.624	9.05M	6.81	6.45	54.71	476.22	186.0	206.2	8.95	4386	337
28 D = 28.000	5LX	.250	27.500	15.70M	7.33	7.20	21.80	594.0	74.1	257.2	9.81	2099	150
	5LX	.281	27.438	15.60M	7.33	7.18	24.47	591.3	83.2	256.0	9.80	2351	168
	5LX	.344	27.312	15.20M	7.33	7.15	29.89	585.9	101.6	253.7	9.78	2859	204
	5LX	.406	27.188	14.86M	7.33	7.12	35.20	580.6	119.7	251.4	9.76	3351	239
	5LX	.469	27.062	14.51M	7.33	7.09	40.56	575.2	137.9	249.1	9.74	3845	275
30 D = 30.000	5LX	.281	29.438	22.11M	7.85	7.71	26.24	680.6	89.2	294.7	10.51	2897	193
	5LX	.344	29.312	21.64M	7.85	7.67	32.05	674.8	109.0	292.2	10.49	3525	235
	5LX	.406	29.188	21.19M	7.85	7.64	37.75	669.1	128.3	289.7	10.46	4134	276
	5LX	.469	29.062	20.73M	7.85	7.61	43.51	663.3	147.9	287.2	10.44	4746	316
32 D = 32.000	5LX	.250	31.500	31.01M	8.38	8.25	24.94	779.3	84.8	337.4	11.23	3143	196
	5LX	.281	31.438	30.71M	8.38	8.23	28.00	776.2	95.2	336.1	11.21	3523	220
	5LX	.344	31.312	30.10M	8.38	8.19	34.21	770.0	116.3	333.4	11.19	4287	268
	5LX	.406	31.188	29.51M	8.38	8.17	40.30	764.0	137.0	330.8	11.17	5030	314
	5LX	.469	31.062	28.92M	8.38	8.13	46.46	757.8	158.0	328.1	11.15	5776	361
34 D = 34.000	5LX	.250	33.500	42.91M	8.90	8.77	26.51	881.4	90.1	381.6	11.93	3775	222
	5LX	.281	33.438	41.80M	8.90	8.75	29.77	878.2	101.2	380.3	11.92	4232	249
	5LX	.344	33.312	41.02M	8.90	8.72	36.37	871.5	123.7	377.4	11.90	5152	303
	5LX	.406	33.188	40.26M	8.90	8.69	42.85	865.1	145.7	374.6	11.88	6047	356
	5LX	.469	33.062	39.50M	8.90	8.66	49.41	858.5	168.0	371.7	11.86	6947	409
36 D = 36.000	5LX	.250	35.500	56.38M	9.42	9.29	28.08	989.8	95.5	428.6	12.64	4487	249
	5LX	.281	35.438	55.89M	9.42	9.28	31.53	986.3	107.2	427.1	12.63	5030	280
	5LX	.344	35.312	54.91M	9.42	9.25	38.53	979.3	131.0	424.0	12.61	6126	340
	5LX	.406	35.188	53.95M	9.42	9.21	45.40	972.5	154.4	421.1	12.59	7193	400
	5LX	.469	35.062	S2.99M	9.42	9.18	52.35	965.5	178.0	418.1	12.56	8265	459
38 D = 38.000	5LX	.312	37.376	72.94M	9.95	9.79	36.94	1097	125.6	475.0	13.33	6561	345
	5LX	.344	37.312	72.32M	9.95	9.77	40.70	1093	138.4	475.3	13.31	7216	387)
	5LX	.375	37.250	71.72M	9.95	9.75	44.33	1089	150.7	471.5	13.30	7846	413
	5LX	.406	37.188	71.12M	9.95	9.74	47.95	1086	163.0	470.2	13.29	8474	446
	5LX	.438	37.124	70.51M	9.95	9.72	51.69	1082	175.7	468.5	13.28	9119	480
	5LX	.469	37.062	69.93M	9.95	9.70	55.30	1078	188.0	466.8	13.27	9741	513
	5LX	.500	37.000	69.34M	9.95	9.69	58.91	1075	200.3	465.5	13.26	10359	545
	5LX	.562	36.876	68.19M	9.95	9.65	66.10	1068	224.7	462.4	13.24	11586	610
	5LX	.625	36.750	67.03M	9.95	9.62	73.39	1060	249.5	459.0	13.22	12821	675
40 D = 40.000	5LX	.344	39.312	93.89M	10.47	10.29	42.86	1213	145.7	525.2	14.02	8427	421
	5LX	.375	39.250	93.15M	10.47	10.28	46.68	1209	158.7	523.5	14.01	9165	458
	5LX	.406	39.188	92.42M	10.47	10.26	50.50	1206	171.7	522.2	14.00	9900	495
	5LX	.438	39.124	91.67M	10.47	10.24	54.44	1202	185.1	520.5	13.99	10655	533
	5LX	.469	39.062	90.94M	10.47	10.23	58.25	1198	198.0	518.7	13.98	11382	569
	5LX	.500	39.000	90.22M	10.47	10.21	62.05	1194	211.0	517.0	13.97	12106	605
	5LX	.562	38.876	88.80M	10.47	10.18	69.63	1187	236.7	514.0	13.95	13544	677
	5LX	.625	38.750	87.37M	10.47	10.15	77.31	1179	262.8	510.5	13.92	14991	750
42 D = 42.000	5LX	.406	41.188	118.54M	11.00	10.78	53.05	1332	180.4	576.8	14.71	11477	547
	5LX	.469	41.062	116.76M	11.00	10.73	61.19	1324	208.1	573.3	14.68	13198	629
48 D = 48.000	5LX	.406	47.188	233.97M	12.56	12.35	60.71	1749	206.4	757.3	16.83	17194	716
	5LX	.469	47.062	230.86M	12.56	12.32	70.03	1740	238.1	753.2	16.81	19784	824

Appendix 5

PROCEDURE: (1) Select column applicable to shape (2) Enter given data to right of heavy bars (3) Complete form, referring to designated charts and tables in tube turn "line expansion and flexibility" booklet (4) Compare S_E with S_A

Nom. PIPE SIZE and WEIGHT			Nom. PIPE SIZE and WEIGHT			Nom. PIPE SIZE and WEIGHT			-
Table 1	Eff. ELBOW DIAM.	D_r =	Table 1	Eff. ELBOW DIAM.	D_r = / D_r =	Table 1	Eff. ELBOW DIAM.	D_r = / D_r =	in.
	Eff. ELBOW LENGTH	L_r =		Eff. ELBOW LENGTH	L_r = / L_r =		Eff. ELBOW LENGTH	L_r = / L_r =	ft
General Notes 1. For tables and charts, refer to tubes turns' booklet "line expansion and flexibility" 2. Elbow radius = $1\frac{1}{2}$ x Nominal Pipe size	L-BEND		Z-BEND / U-BEND			SYMM LOOP / GUIDED LOOP			
Length of SHORTER LEG		H =	Length of SHORTER VERTICAL		h = / h =	Extreme ANCHOR SPACING		U' = U / U' =	ft
Length of LONGER LEG		w =	Length of LONGER VERTICAL		H = / H =	Near by RESTRAINT SPACING		U = / U =	ft
			Horizontal OFFSET		w = / w =	Horizontal OFFSET		H = / H =	ft
						WIDTH of LOOP		w = / w =	ft
Chart 3	Enter at ABSCISSA	h/H = O	Chart 3 or 4	Enter at ABSCISSA	h/H = / h/H =	Chart 2	Enter at ABSCISSA	w/H = / w/H =	no.
	Go to curve for	H /w =		Go to curve for	H /w = / H /w =		Go to curve for	H /U = / H /U =	no.
	Read SHAPE FACTOR	f_s =		Read SHAPE FACTOR	f_s = / f_s =		Read SHAPE FACTOR	f_s = / f_s =	ft/in.
		(n=1)			(n=2) / (n=2)		Read Eff. No of ELBOWS	n = / n =	no.
Square -Corner Length H + w =		L_s =	Square -Corner Length H + w =		L_s = / L_s =	Sq -Corner Length U + 2H=		L_s = / L_s =	ft
Sum of Eff. ELBOW LENGTHS		L_r =	Sum of Eff. ELBOW LENGTHS		$2L_r$ = / $2L_r$ =	Sum of Eff. ELBOW LENGTHS		nL_r = / nL_r =	ft
TOTAL Eff. LENGTH $L_s + L_r$ =		L =	TOTAL Eff. LENGTH $L_s + L_r$ =		L = / L =	TOTAL Eff. LENGTH $L_s + nL_r$ =		L = / L =	ft
Eff. DIAMETER LENGTH $\frac{L}{D_r}$ =		f_i =	Eff. DIAMETER LENGTH $\frac{L}{D_r}$ =		f_i = / f_i =	Eff. DIAMETER LENGTH $\frac{L}{D_r}$ =		f_i = / f_i =	ft/in.
PIPE MATERIAL (or Spec.)			PIPE MATERIAL (or Spec.)			PIPE MATERIAL (or Spec.)			-
SERVICE (or Code Section)			SERVICE (or Code Section)			SERVICE (or Code Section)			-
HOT (max) Metal TEMP.		T_h =	HOT (max) Metal TEMP.		T_h = / T_h =	HOT (max) Metal TEMP.		T_h = / T_h =	°F
COLD (min) Metal TEMP.		T_c =	COLD (min) Metal TEMP.		T_c = / T_c =	COLD (min) Metal TEMP.		T_c = / T_c =	°F
Table 5	Read opposite T_h	S_A =	Table 5	Read opposite T_h	S_A = / S_A =	Table 5	Read opposite T_h	S_A = / S_A =	psi
	Read opposite T_h	f_{eh} =		Read opposite T_h	f_{eh} = / f_{eh} =		Read opposite T_h	f_{eh} = / f_{eh} =	psi
	Read opposite T_c	f_{ec} =		Read opposite T_c	f_{ec} = / f_{ec} =		Read opposite T_c	f_{ec} = / f_{ec} =	psi
EXPANSION FACTOR $f_{eh} - f_{ec}$ =		f_e =	EXPANSION FACTOR $f_{eh} - f_{ec}$ =		f_e = / f_e =	EXPANSION FACTOR $f_{eh} - f_{ec}$ =		f_e = / f_e =	psi/psi
COMPUTED EXP. STRESS RANGE. $\frac{f_e f_s}{f_i}$ =		S_E =	COMPUTED EXP. STRESS RANGE. $\frac{f_e f_s}{f_i}$ =		S_E = / S_E =	COMPUTED EXP. STRESS RANGE. $\frac{U'}{U} \times \frac{f_e f_s}{f_i}$ =		S_E = (U'/U) = 1 / S_E =	psi

CALC'D :	DATE :	TUBE TURNS, LOUISVILLE, KENTUCKY, PIPING FLEXIBILITY CALCULATION FORM SIMPLIFIED CALCULATION OF L-, Z- AND U-BENDS, AND EXPANSION LOOPS	JOB : / SHEET 4.02-
CHECKED :	DATE :		LINE : / (SINGLE SHEET)

Revised to conform with 1955 Code for Pressure Piping

NOM. SIZE	SCHEDULE NO. and/or WEIGHT	NOMINAL THICKN.	ELBOW ACTORS*	
			D_r (in)	L_r (ft)
1	5S	0.065	2.99	1.6
	10S	0.109	2.01	0.7
	40 = ST = 40S	0.133	1.72	0.5
	80 = XS = 80S	0.179	1.34	0.2
	160	0.250	1.32	0
	XX	0.358	1.32	-0.1
$1\frac{1}{4}$	5S	0.065	4.50	2.7
	10S	0.109	3.07	1.3
	40 = ST = 40S	0.140	2.52	0.9
	80 = XS = 80S	0.191	1.96	0.4
	160	0.250	1.66	0.2
	XX	0.382	1.66	-0.1
$1\frac{1}{2}$	5S	0.065	5.49	3.7
	10S	0.109	3.76	1.8
	40 = ST =40S	0.145	3.04	1.2
	80 = XS = 80S	0.200	2.34	0.6
	160	0.281	1.90	0.2
	XX	0.400	1.90	-0.1
2	5S	0.065	7.70	6.0
	10S	0.109	5.32	3.1
	40 = ST =40S	0.154	4.11	1.8
	80 = XS = 80S	0.218	3.14	1.0
	160	0.343	2.38	0.2
	XX	0.436	2.38	-0.1
$2\frac{1}{2}$	5S	0.083	8.80	6.7
	10S	0.120	6.76	4.2
	40 = ST = 40S	0.203	4.57	1.9
	80 = XS = 80S	0.276	3.59	1.0
	160	0.375	2.88	0.4
	XX	0.552	2.88	-0.2
3	5S	0.083	12.39	10.4
	10S	0.120	9.56	6.7
	40 =ST =40S	0.216	6.23	2.9
	80 = XS = 80S	0.300	4.83	1.6
	160	0.438	3.54	0.6
	XX	0.600	3.50	0
$3\frac{1}{2}$	5S	0.083	15.36	13.8
	10S	0.120	11.84	9.0
	40 = ST =40S	0.226	7.48	3.8
	80 = XS = 80S	0.318	5.76	2.1
4	5S	0.083	18.54	17.8
	10S	0.120	14.36	11.6
	40 = ST = 40S	0.237	8.78	4.7
	80 = XS = 80S	0.337	6.75	2.6
	120	0.438	5.49	1.5
	160	0.531	4.68	0.8
	XX	0.674	4.50	0.2
5	5S	0.109	21.81	20.5
	10S	0.134	18.91	16.2
	40 = ST = 40S	0.258	11.85	7.0
	80 = XS = 80S	0.375	8.96	3.9
	120	0.500	7.18	2.2
	160	0.625	5.95	1.2
	XX	0.750	5.56	0.6

NOM. SIZE	SCHEDULE NO. and/or WEIGHT	NOMINAL THICKN.	ELBOW ACTORS*	
			D_r (in)	L_r (ft)
6	SS	0.109	29.15	29.8
	10S	0.134	25.31	23.5
	40 = ST = 40S	0.280	15.04	9.5
	80 = XS = 80S	0.432	10.87	4.9
	120	0.562	8.88	3.0
	160	0.718	7.29	1.6
	XX	0.864	6.63	0.8
8	5S	0.109	44.76	51.8
	10S	0.148	36.31	36.9
	20	0.250	25.19	20.0
	30	0.277	23.46	17.6
	40 = ST =40S	0.322	21.05	14.5
	60	0.406	17.77	10.5
	80 = XS = 80S	0.500	15.. 27	7.7
	100	0.593	13.37	5.8
	120	0.718	11.56	4.0
	140	0.812	10.44	3.0
	XX	0.875	9.83	2.5
	160	0.906	9.57	2.2
10	5S	0.134	56.22	65.3
	10S	0.165	48.81	52.1
	20	0.250	36.55	32.3
	30	0.307	31.71	25.3
	40 = ST = 40S	0.365	27.95	20.4
	60 = XS = 80S	0.500	22.36	13.3
	80	0.593	19.67	10.3
	100	0.718	16.99	7.6
	120	0.843	15.05	5.6
	140	1.000	13.12	3.8
	160	1.125	11.93	2.8
12	5S	0.156	66.84	79.1
	10S	0.180	60.82	67.6
	20	0.250	48.4S	46.7
	30	0.330	39.91	33.7
	ST = 40S	0.375	36.47	28.9
	40	0.406	34.55	26.2
	XS = 80S	0.500	29.71	20.0
	60	0.562	27.29	17.0
	80	0.687	23.59	12.7
	100	0.843	20.15	9.1
	120	1.000	17.72	6.6
	140	1.125	16.19	5.1
	160	1.312	14.28	3.4
14	10	0.250	54.46	57.0
	20	0.312	46.76	44.0
	30=ST	0.375	41.16	35.2
	40	0.438	36.82	29.1
	XS	0.500	33.46	24.5
	60	0.593	29.68	19.4
	80	0.750	24.92	13.7
	100	0.937	21.14	9.4
	120	1.093	19.04	7.0
	140	1.250	16.80	5.1
	160	1.406	15.40	3.7

NOM. SIZE	SCHEDULE NO. and/or WEIGHT	NOMINAL THICKN.	ELBOW ACTORS*	
			D_r (in)	L_r (ft)
16	10	0.250	68.3	75.7
	20	0.312	58.6	58.4
	30 = ST	0.375	51.5	47.4
	40 = XS	0.500	42.2	33.2
	60	0.656	34.7	23.2
	80	0.843	28.8	16.1
	100	1.031	24.8	11.5
	120	1.218	21.9	8.4
	140	1.438	19.2	5.7
	160	1.593	17.6	4.4
18	10	0.250	83.3	97.0
	20	0.312	71.6	75.4
	ST	0.375	63.0	61.4
	30	0.438	56.7	51.1
	XS	0.500	51.5	43.3
	40	0.562	47.5	37.5
	60	0.750	39.8	25.5
	80	0.937	32.8	18.5
	100	1.156	28.1	13.1
	120	1.375	25.0	9.4
	140	1.562	22.1	7.1
	160	1.781	20.0	5.0
20	10	0.250	99.6	121.0
	20 = ST	0.375	75.4	76.6
	30 = XS	0.500	61.6	55.0
	40	0.593	54.6	44.4
	60	0.812	43.6	29.4
	80	1.031	36.6	20.8
	100	1.281	31.8	14.6
	120	1.500	27.6	10.8
	140	1.750	24.4	7.7
	160	1.968	22.2	5.6
24	10	0.250	135.4	176.9
	20=ST	0.375	102.5	113.5
	XS	0.500	84.0	81.8
	30	0.562	77.5	71.0
	40	0.687	67.2	55.7
	60	0.968	54.0	35.6
	80	1.218	44.4	25.5
	100	1.531	38.2	17.6
	120	1.812	33.8	12.8
	140	2.062	29.8	9.6
	160	2.343	26.9	6.9
30	10	0.312	169.2	221.1
	ST	0.375	149.4	181.1
	20 =XS	0.500	122.7	132.0
	30	0.625	105.0	102.3

* These properties apply to this method only. They are defined as follows in terms of the nominal size *d*. outside diameter *D*. flexibility factor Ir and stress intensification factor i:

Eff. Elbow Length $L_r = (0.3k\text{-}0.4)d$

Eff. Elbow Diameter $D_r = iD$

SHAPE FACTOR f_s for SYMMETRICAL EXPANSION LOOPS

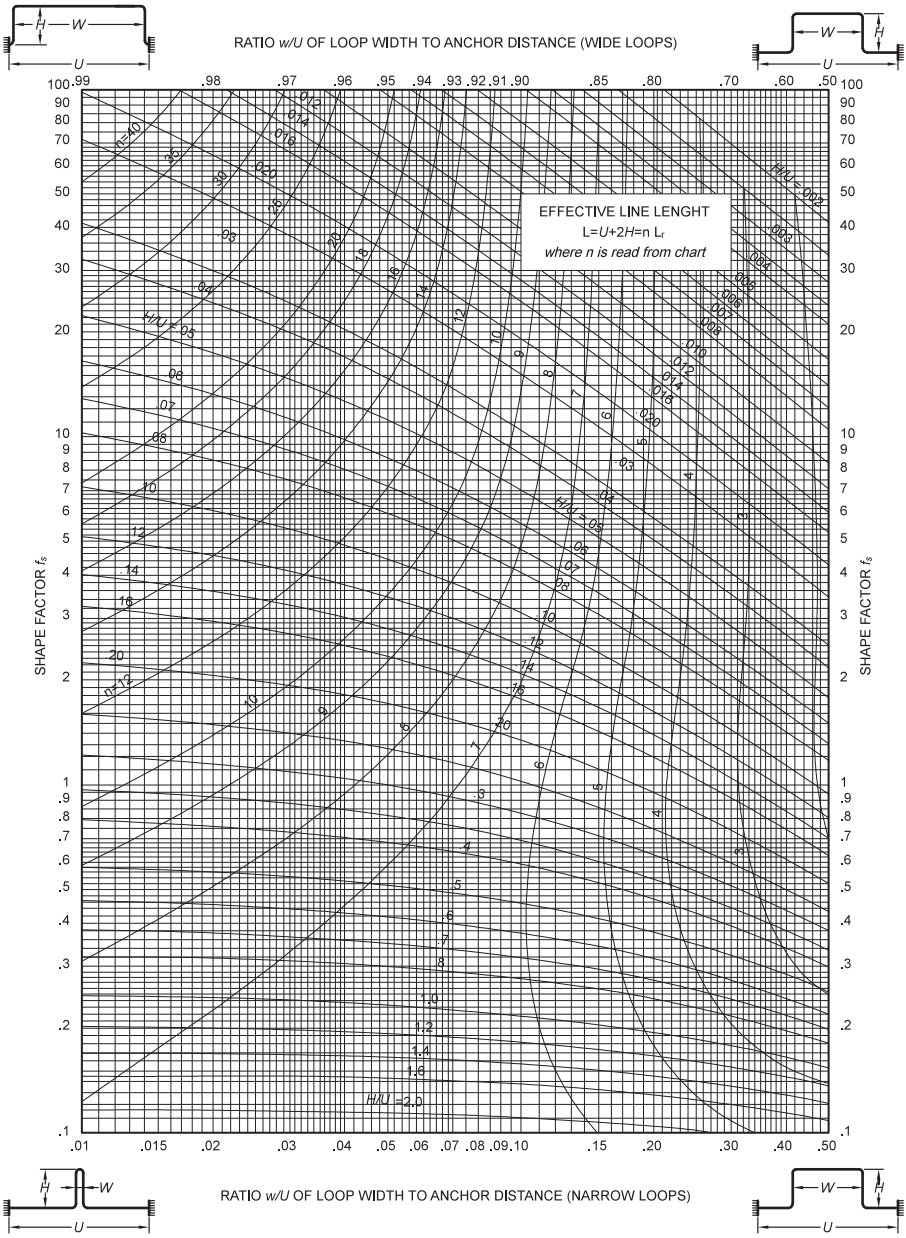

SHAPE FACTOR f_s for Z-, L- and U-BENDS with small H/w-Ratios

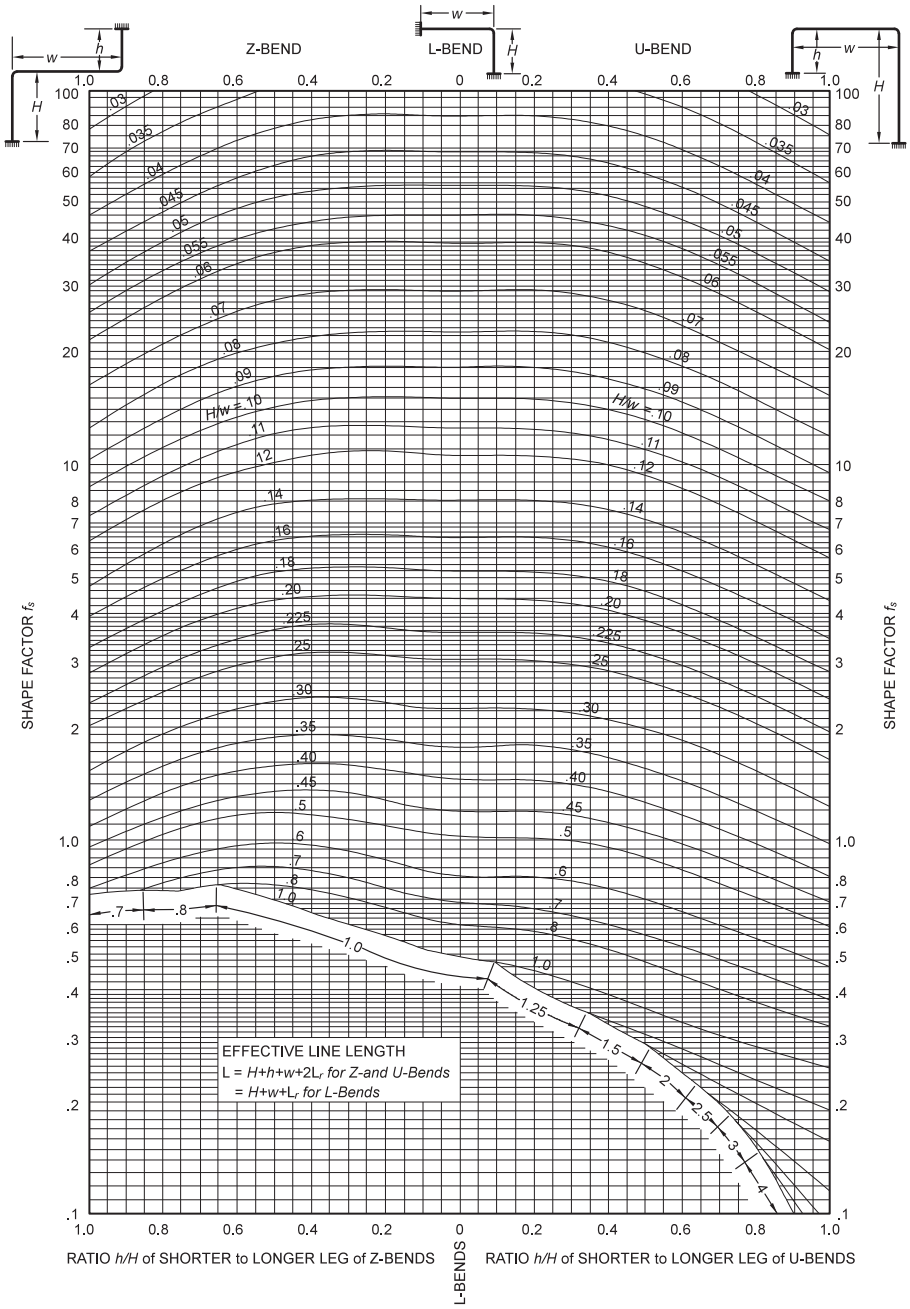

SHAPE FACTOR f_s for Z-, L- and U-BENDS with large H/w-Ratios

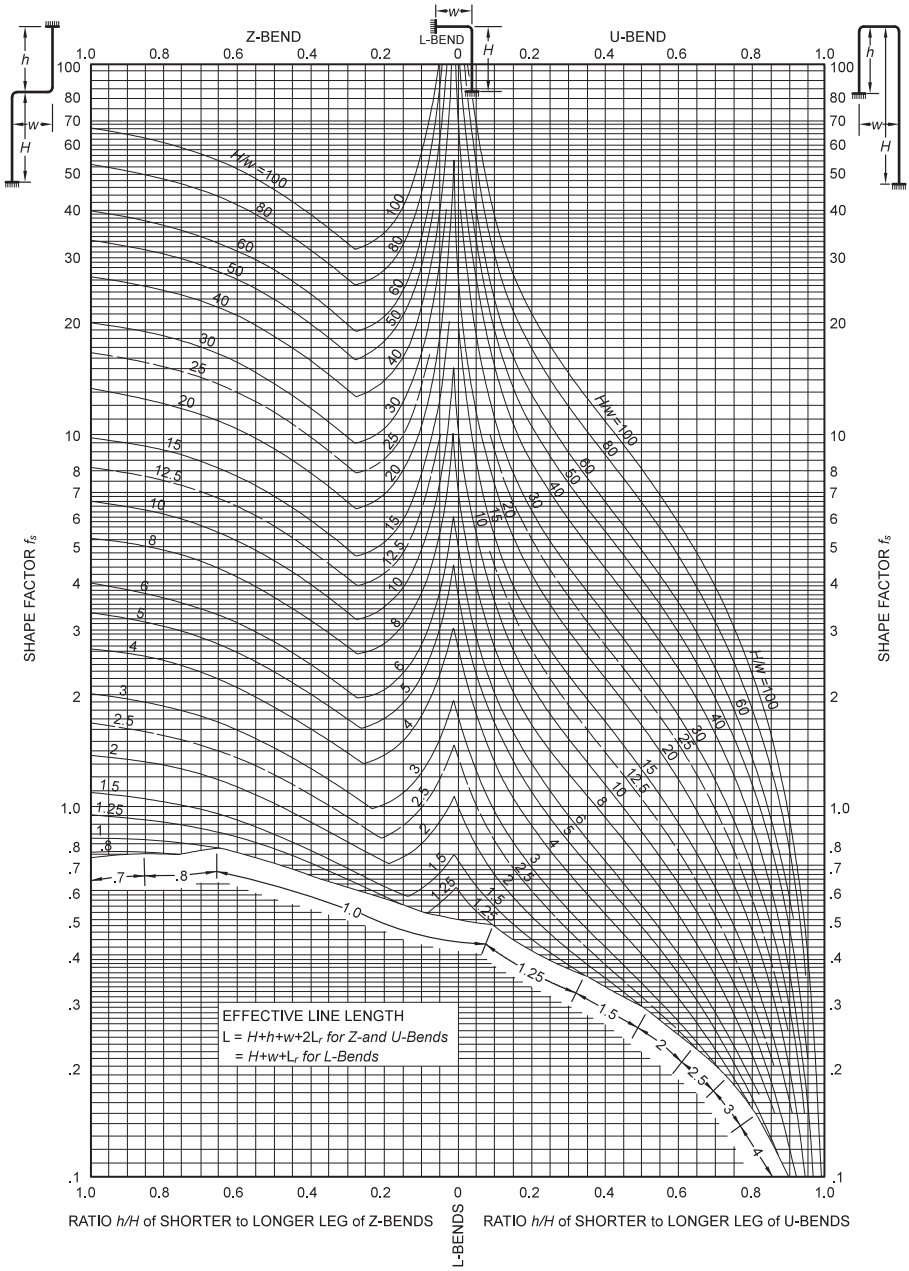

PLAIN CARBON STEEL					
Metal Temp. T (°F)	Expansion Factor f_e (psi)	Allowable Stress Range S_A (psi)			
		Grade A Carbon Steel		Grade B Carbon Steel	
		Power	Oil	Power	Oil
-20	-14,000	18,000	24,000	22,500	30,000
0	-11,000				
32	-6,000				
70	0				
100	5,000		24,000		30,000
150	14,000		23,900		29,900
200	23,000		23,850		29,800
250	33,000		23,750		29,650
300	42,000		23,650		29,550
350	53,000		23,550		29,450
400	63,000		23,450		29,300
450	73,000		23,350		29,200
500	84,000		23,300		29,100
550	96,000		23,200		29,000
600	107,000		23,100		28,900
650	119,000	18,000	23,000	22,350	28,750
700	131,000	17,900	22,900	22,000	28,600
750	143,000	17,700	22,700	21,450	28,250
800	156,000	17,250	22,350	20,700	27,700
850	169,000	16,800	22,000	20,000	27,150
900	182,000	16,250	21,650	22,000	26,650
950	194,000		21,150		26,150
1000	207,000		20,650		25,650
1025	213,000		20,500		25,500
1050	220,000		20,400		25,400
1075	227,000		20,350		25,350
1100	233,000		20,250		25,250
1125	240,000				
1150	246,000				
1175	252,000				
1200	258,000				

CARBON MOLY and LOW (up to 3%) CHROME MOLY					
Metal Temp. T (°F)	Expansion Factor f_e (psi)	Allowable Stress Range S_A (psi)			
		Grade A Carbon Steel		Grade B Carbon Steel	
		Power	Oil	Power	Oil
-20	-15,000	20,650	27,550	22,500	28,150
0	-12,000				
32	-6,000				
70	0				
100	6,000		27,550		28,150
150	15,000		27,450		28,050
200	25,000		27,350		28,000
250	35,000		27,250		27,900
300	45,000		27,200		27,850
350	56,000		27,100		27,750
400	67,000		27,000		27,700
450	79,000		26,950		27,600
500	90,000		26,850		27,550
550	102,000		26,750		27,500
600	114,000		26,650		27,400
650	127,000		26,600		27,350
700	140,000		26,500		27,250
750	154,000	20,650	26,400		27,200
800	167,000	20,550	26,300	22,500	27,100
850	181,000	20,500	26,250	22,350	26,950
900	195,000	20,300	26,050	22,050	26,550
950	208,000	19,700	25,450	21,500	25,950
1000	222,000	18,750	24,500	20,700	25,000
1025	229,000		24,200	20,400	24,750
1050	236,000		23,950	20,150	24,500
1075	243,000		23,750	19,950	24,300
1100	250,000		23,550	19,750	24,150
1125	257,000			19,650	24,000
1150	263,000			19,500	23,900
1175	270,000				23,800
1200	277,000				23,750

Annealed NICKEL		
Metal Temp. T (°F)	Expansion Factor f_e (psi)	Allow. S_A (psi)
		Oil only
-300	-92,000	15,000
-200	-65,000	
-100	-39,000	
-20	-21,000	
0	-15,000	
32	-9,000	
70	0	
100	6,000	
150	20,000	
200	35,000	
250	50,000	
300	66,000	
350	82,000	
400	98,000	
450	114,000	
500	131,000	15,000

Annealed MONEL		
Metal Temp. T (°F)	Expansion Factor f_e (psi)	Allow. S_A (psi)
		Oil only
-300	-62,000	25,800
-200	-47,000	
-100	-31,000	
-20	-18,000	
0	-13,000	
32	-8,000	
70	0	
100	6,000	25,800
150	16,000	25,700
200	26,000	25,600
250	36,000	25,500
300	47,000	25,400
350	58,000	25,300
400	70,000	25,200
450	81,000	25,200
500	93,000	25,150

Girth or Seam-Welded ALUMINUM					
Metal Temp. T (°F)	Expansion Factor f_e (psi)	Allowable Stress Range S_A (psi)			
		3003-H112 (M1A)	5154-H112 (Gr40A)	6061-T6 (6S11A)	6063-T6 (6S10A)
-300	-39,000	5,050	11,000	9,000	6,400
-200	-32,000				
-100	-22,000				
-20	-13,000				
0	-10,000				
32	-5,000				
70	0				
100	4,000	5,050		9,000	6,400
150	11,000	5,000		8,950	6,350
200	18,000	4,900	11,000	8,900	6,300
250	25,000	4,850	10,950	8,850	6,250
300	32,000	4,800	10,800	8,750	6,150
350	39,000	4,700		8,550	6,000
400	47,000	4,650		8,300	5,750
450	55,000				
500	63,000				

MEDIUM (5 to 9%) CHROME MOLY			
Metal Temp. T (°F)	Expansion Factor f_e (psi)	Allowable S_A (psi) 5,7 and 9% Chrome Moly	
		Power	Oil
- 20	- 14,000	22,500	28,150
0	- 11,000		
32	- 5,000		
70	0		
100	5,000		28,150
150	13,000		28,000
200	21,000		27,900
250	30,000		27,800
300	39,000		27,700
350	48,000		27,600
400	57,000	22,500	27,500
450	67,000	22,450	27,350
500	77,000	22,400	27,250
550	87,000	22,300	27,150
600	97,000	22,250	27,050
650	107,000	22,200	26,950
700	117,000	22,100	26,850
750	128,000	22,050	26,700
800	139,000	21,950	26,550
850	150,000	21,850	26,300
900	161,000	21,500	25,800
950	173,000	21,000	25,200
1000	184,000	20,150	24,700
1025	190,000	19,900	24,550
1050	195,000	19,650	24,300
1075	201,000	19,500	24,200
1100	207,000	19,400	24,050
1125	212,000	19,300	24,000
1150	217,000	19,200	23,900
1175	223,000	19,150	23,800
1200	228,000	19,050	23,750

AUSTENITIC (18 Cr 8 Ni) STAINLESS			
Metal Temp. T (°F)	Expansion Factor f_e (psi)	Allowable S_A (psi) Types 304, 316, 317, 321, and 347	
		Power	Oil
- 20	- 22,000	28,150	28,150
0	- 16,000		
32	- 11,000		
70	0		
100	8,000		28,ISO
150	21,000		27,850
200	33,000	28,150	27,600
250	46,000	27,900	27,400
300	60,000	27,700	27,200
350	73,000	27,550	27,000
400	87,000	27,400	26,850
450	101,000	27,300	26,700
500	114,000	27,250	26,550
550	128,000	27,200	26,450
600	142,000	27,150	26,350
650	157,000	27,150	26,250
700	171,000	27,150	26,150
750	186,000	27,100	26,050
800	201,000	27,100	25,950
850	216,000	27,000	25,850
900	231,000	26,950	25,800
950	247,000	26,900	25,700
1000	262,000	26,800	25,650
1025	270,000	26,750	25,600
1050	278,000	26,700	25,550
1075	285,000	26,250	25,450
1100	293,000	26,000	2S.300
1125	301,000	25,700	25,100
1150	309,000	25,350	24,900
1175	316,000	25,000	24,700
1200	324,000	24,700	24,550

Notes to Allowable Stress Range:

1. *For cyclic services*, i.e. where more than 7000cycles of major temperature change are anticipatedduring the life of the system ^this corresponds to adaily cycle for a 20-year life), the values of Satabulated must be corrected by the stress reductionfactors f listed below:

Total Number of Cycles	Expected Reduction factor /
7,000 or less	1.0
14,000	0.9
22,000	0.8
45,000	0.7
100,000	0.6
250,000 or less	0.5

2. For *low-pressure services* or, more strictly, wherethe sum of the longitudinal stresses caused bypressure, weight, and other sustained loadings re-mains below the hot allowable stress Sh, the differencemay be added to Sa.

3. *For aluminum alloys*, the Code lists S-values only for Alloy 3003-0, and these only in Table 12 applying to oil refinery piping. The allowable stress ranges shown here for Alloys 5154-0 and 6061-T6 are based onS-values given in Cases 1174-2 and 1185 of the ASME Boiler Code Interpretations; those for Alloy 6063-T6have been similarly derived from across-weld tensile tests and hydrostatic tests of welded assemblies. All values listed may be used for welded piping, they strictly apply to power piping, but it is suggested that they be used equally for other services until more experience has accumulated.

4. *Related alloy steels* have been assigned the sameallowable stress ranges where the precisely calculatedvalues differ only by a few percent, a justifiablesimplification in the case of an approximate methodsuch as the present,

5. *Specifications and grades* covered by the indi-vidual subtables are listed below:

Title of Subtable	ASTM Specifications and Grades
Grade A Carbon Steel	A53, A83, A106, and A139, Gr.A A161 and A192 also API-5L, Gr.A
Grade B Carbon Steel	A53, A106, and A139. Gr.B also API-5L, Gr.B
Carbon Moly and I/2%Cd/2%Mo	A209, Gr.TI A335, Gr.PI and P2
Low (up to 3%) Chrome Moly	A335, Gr.P3, P3b, PII, P12 and P22
5. 7. and 9% Chrome Moly	A335, Gr.P5, P5b, P5c, P7 and P9
Types 304, 316, 317, 321, 347	A213, A249, A312 (Types as at left) A269 (Types 316 and 317)
Nickel, annealed	B161
Monel, annealed	B165
Aluminum Alloy - 3003-H112 5154-H112 6061-T6 6063-T6	B241 and B274, Alloy MIA B274, Alloy GR40A B241 and B274, Alloy GS11A B241 and B274, Alloy GS10A
Copper, annealed	B42
Red Brass, annealed	B43
Wrought Iron	A72; also API-5L

Annealed COPPER			
Metal Temp. T (°F)	Expansion Factor f_e (psi)	Allowable Stress Range S_A (psi)	
		Power	Oil
-300	-55,000	9,000	10,050
-200	-40,000		
-100	-27,000		
- 20	-15,000		
0	-12,000		
32	- 7,000		
70	0		
100	5,000	9,000	10,050
150	13,000	8,950	10,000
200	22,000	8,850	10,000
250	31,000	8,800	9,800
300	40,000	8,700	9,600
350	49,000	8,450	9,300
400	58,000	8,250	9,000
450	67,000		
500	76,000		

Annealed RED BRASS			
Metal Temp. T (°F)	Expansion Factor f_e (psi)	Allowable Stress Range S_A (psi)	
		Power	Oil
-300		12,000	12,000
-200			
-100			
- 20	-13,000		
0	-10,000		
32	- 6,000		
70	0		
100	4,000		
150	11,000		
200	18,000	12,000	
250	25,000	11,850	
300	32,000	11,750	12,000
350	39,000	11,250	11,400
400	47,000	10,750	10,750
450	55,000		10,500
500	63,000		

WROUGHT IRON			
Metal Temp. T (°F)	Expansion Factor f_e (psi)	Allowable Stress Range S_A (psi)	
		Power	Oil
- 20	- 19,000	15,000	21,000
0	- 15,000		
32	- 8,000		
70	0		
100	6,000		21,000
150	17,000		20,900
200	28,000		20,800
250	39,000		20,700
300	51,000		20,600
350	62,000		20,550
400	74,000		20,450'
450	86,000		20,350
500	98,000		20,250
550	111,000		20,200
600	123,000		20,100
650	136,000	15,000	20,000

Temperature deg F	Carbon Steel Carbon Moly Low Chrome (thru 3 CrMo)
-325	-2.37
-300	-2.24
-275	-2.17
-250	-1.98
-225	-1.85
-200	-1.71
-175	-1.58
-150	-1.45
-125	-1.3
-100	-1.15
-75	-1
-50	-0.84
-25	-0.68
0	-0.49
25	-0.32
50	-0.14
70	0
700	0.23
125	0.42
150	0.61
175	0.8
200	0.99
225	1.21
250	1.4
275	1.61
300	1.82
325	2.06
350	2.26
375	2.48
400	2.7
425	2.93
450	3.16
475	3.39
500	3.62
525	3.86
550	4.11
575	4.35
600	4.6
625	4.86
650	5.11

Appendix 6

TABLE ONE
WEIGHT OF CONCRETE IN POUNDS PER LINEAL FOOT
TO GIVE A FINAL SPECIFIC GRAVITY OF 1.08

Pipe Size Inches		Standard Concrete at 140# /Cu. Ft.	Barite Concrete at 190# /Cu. Ft.	Pipe Size Inches		Standard Concrete at l40# /Cu. Ft.	Barite Concrete at 190# /Cu. Ft.
O. D.	Wall Thickness			O.D.	Wall Thickness		
4.500	0.237		-	16.000	0.250	102	82
	0-337	-	-		0.375	62	50
	0.531	-	-		0.500	23	19
	0.674	-	-				
				18.000	0.250	141	113
5.563	0.258	-	-		0.375	95	76
	0.375	-	-		0.500	52	42
	0.625	-	-		0.562	29	23
	0.750	-	-				
				20.000	0.250	183	147
6.625	0.280	-	-		0.375	133	107
	0.432	-	-		0.500	83	67
	0.718	-	-		0.593	48	39
	0.864	-	-				
				22.000	0.250	235	189
7.625	0.430	-	-		0.312	208	167
	0.625	-	-		0.375	179	144
	0.920	-	-				
				24.000	0.250	290	233
8.625	0.322	-	-		0.375	228	183
	0.500	-	-		0.500	170	136
	0.875	-			0.687	81	65
	0.906	-	-				
				26.000	0.250	353	284
10.750	0.365	5.3	4.2		0.312	320	257
	0.500	-	-		0.375	284	228
12.750	0.330	32.5	26.1	30.000	0.250	490	394
	0.406	13.6	10.9		0.312	452	363
	0.500	-	-		0.375	413	332
14.000	0.250	69	56				
	0.375	35	28				
	0.438	19	16				
	0.500	2	2				

TABLE ONE
WEIGHT OF CONCRETE IN POUNDS PER LINEAL FOOT
TO GIVE A FINAL SPECIFIC GRAVITY OF 1.15

Pipe Size Inches		Standard Concrete at 140# /Cu. Ft.	Barite Concrete at 190# /Cu. Ft.	Pipe Size Inches		Standard Concrete at 140# /Cu. Ft.	Barite Concrete at 190# /Cu. Ft.
O.D.	Wall Thickness			O.D.	Wall Thickness		
4.500	0.237			16.000	0.250	123	96
	0.337	-	-		0.375	80	63
	0.531	-	-		0.500	39	31
	0.674	-	-				
				18.000	0.250	166	130
5.563	0.258	-	-		0.375	117	92
	0.375	-	-		0.500	72	56
	0.625	-	-		0.562	47	37
	0.750	-	-				
				20.000	0.250	216	169
6.625	0.280	-	-		0.375	162	127
	0.432	-	-		0.500	109	85
	0.718	-	-		0.593	72	56
	0.864	-	-				
				22.000	0.250	275	215
7.625	0.430	-	-		0.312	246	193
	0.625	-	-		0.375	216	169
	0.920	-	-				
				24.000	0.250	337	264
8.625	0.322	2.7	7.1		0.375	271	212
	0.500	-	-		0.500	209	164
	0.875	-	-		0.687	115	90
	0.906	-	-				
				26.000	0.250	411	322
10.750	0.365	11.7	9.1		0.312	376	294
	0.500	-	-		0.375	337	264
12.750	0.330	43.1	33.7	30.000	0.250	567	444
	0.406	22.9	18.0		0.312	526	412
	0.500	-	-		0.375	485	379
14.000	0.250	84	66				
	0.375	47	37				
	0.438	31	24				
	0.500	12	10				

TABLE ONE
WEIGHT OF CONCRETE IN POUNDS PER LINEAL FOOT
TO GIVE A FINAL SPECIFIC GRAVITY OF 1.20

Pipe Size Inches		Standard Concrete at 140# /Cu. Ft.	Barite Concrete at 190# /Cu. Ft.	Pipe Size Inches		Standard Concrete at 140# /Cu. Ft.	Barite Concrete at 190# /Cu. Ft.
O.D.	Wall Thickness			O.D.	Wall Thickness		
4.500	0.237	-	-	16.000	0.250	138	106
	0.337	-	-		0.375	93	71
	0.531	-	-		0.500	49	38
	0.674	-	-				
				18.000	0.250	187	144
5.563	0.258	-	-		0.375	136	104
	0.375	-	-		0.500	68	68
	0.625	-	-		0.562	62	48
	0.750	-	-				
				20.000	0.250	241	185
6.625	0.280	-	-		0.375	185	142
	0.432	-	-		0.500	129	99
	0.718	-	-		0.593	90	69
	0.864	-	-				
				22.000	0.250	306	234
7.625	0.430	-	-		0.312	275	211
	0.625	-	-		0.375	243	187
	0.920	-	-				
				24.000	0.250	374	287
8.625	0.322	5.8	4.5		0.375	306	234
	0.500	-	-		0.500	241	185
	0.875	-	-		0.687	142	109
	0.906	-	-				
				26.000	0.250	454	348
10.750	0.365	16.8	12.9		0.312	417	320
	0.500	-	-		0.375	377	289
12.750	0.330	51.5	39.5	30.000	0.250	628	482
	0.406	30.4	23.3		0.312	585	449
	0.500	5.0	3.8		0.375	542	416
14.000	0.250	95	73				
	0.375	56	43				
	0.438	39	30				
	0.500	19	15				

TABLE ONE
WEIGHT OF CONCRETE IN POUNDS PER LINEAL FOOT
TO GIVE A FINAL SPECIFIC GRAVITY OF 1.30

Pipe Size Inches		Standard Concrete at 140# /Cu. Ft.	Barite Concrete at 190# /Cu. Ft.	Pipe Size Inches		Standard Concrete at 140# /Cu. Ft.	Barite Concrete at 190# /Cu. Ft.
O.D.	Wall Thickness			O.D.	Wall Thickness		
4.500	0.237	-	-	16.000	0.250	174	127
	0.337	-	-		0.375	124	91
	0.531	-	-		0.500	76	56
	0.674	-	-				
				18.000	0.250	236	173
5.563	0.258	-	-		0.375	179	131
	0.375	-	-		0.500	126	93
	0.625	-	-		0.562	98	72
	0.750	-	-				
				20.000	0.250	300	220
6.625	0.280	3.1	2.3		0.375	238	175
	0.432	-	-		0.500	176	125
	0.718	-	-		0.593	133	98
	0.864	-	-				
				22.000	0.250	379	278
7.625	0.322	-	-		0.312	345	253
	0.625	-	-		0.375	310	227
	0.920	-	-				
				21.000	0.250	464	340
8.625	0.322	13.0	9.6		0.375	368	285
	0.500	-	-		0.500	317	232
	0.875	-	-		0.667	207	152
	0.906	-	-				
				26.000	0.250	560	410
10.750	0.365	28.6	21.0		0.312	519	381
	0.500	-	-		0.375	474	347
12.750	0.330	70.9	52.0	30.000	0.250	769	564
	0.406	47.5	34.9		0.312	721	529
	0.500	19.5	14.3		0.375	674	494
14.000	0.250	121	89				
	0.375	79	58				
	0.438	60	44				
	0.500	38	28				

TABLE ONE
WEIGHT OF CONCRETE IN POUNDS PER LINEAL FOOT
TO GIVE A FINAL SPECIFIC GRAVITY OF 1.40

Pipe Size Inches		Standard Concrete at 140# /Cu. Ft.	Barite Concrete at 190# /Cu. Ft.	Pipe Size Inches		Standard Concrete at 140# /Cu. Ft.	Barite Concrete at 190# /Cu. Ft.
O.D.	Wall Thickness			O.D.	Wall Thickness		
4.500	0.237	-	-	16.000	0.250	218	152
	0.337	-	-		0.375	162	113
	0.531	-	-		0.500	109	76
	0.674	-	-				
				18.000	0.250	293	204
5.563	0.256	2.7	1.9		0.375	229	159
	0.375	-	-		0.500	170	119
	0.625	-	-		0.562	138	96
	0.750	-	-				
				20.000	0.250	373	259
6.625	0.280	7.9	5.5		0.375	304	211
	0.432	-	-		0.500	234	163
	0.718	-	-		0.593	186	130
	0.864	-	-				
				22.000	0.250	469	326
7.625	0.430	-	-		0.312	431	300
	0.625	-	-		0.375	391	272
	0.920	-	-				
				24.000	0.250	573	398
8.625	0.322	21.9	15.2		0.375	487	339
	0.500	-	-		0.500	407	283
	0.875	-	-		0.687	285	192
	0.906	-	-				
				26.000	0.250	690	480
10.750	0.365	43.2	30.0		0.312	644	448
	0.500	5.2	3.6		0.375	594	413
12.750	0.330	94.9	66.0	30.000	0.250	945	657
	0.406	68.8	47.9		0.312	892	620
	0.500	37.4	26.0		0.375	839	563
14.000	0.250	154	107				
	0.375	107	74				
	0.438	85	59				
	0.500	61	43				

TABLE ONE
WEIGHT OF CONCRETE IN POUNDS PER LINEAL FOOT
TO GIVE A FINAL SPECIFIC GRAVITY OF 1.50

Pipe Size Inches		Standard Concrete at 140# /Cu. Ft.	Barite Concrete at 190# /Cu. Ft.	Pipe Size Inches		Standard Concrete at 140# /Cu. Ft.	Barite Concrete at 190# /Cu. Ft.
O.D.	Wall Thickness			O.D.	Wall Thickness		
4.500	0.237	1.1	0.7	16.000	0.250	278	182
	0.337	-	-		0.375	215	140
	0.531	-	-		0.500	154	101
	0.674	-	-				
				18.000	0.250	369	241
5.563	0.258	6.7	4.4		0.375	296	193
	0.375	-	-		0.500	230	150
	0.625	-	-		0.562	193	126
	0.750	-	-				
				20.000	0.250	469	306
6.625	0.260	14.0	9.2		0.375	390	255
	0.432	-	-		0.500	311	203
	0.718	-	-		0.593	257	168
	0.864	-	-				
				22.000	0.250	586	383
7.625	0.430	-	-		0.312	544	355
	0.625	-	-		0-375	499	326
	0.920	-	-				
				24.000	0.250	710	464
8.625	0.322	33.2	21.7		0.375	614	401
	0.500	-	-		0.500	523	341
	0.875	-	-		0.687	384	251
	0.906	-	-				
				26.000	0.250	856	558
10.750	0.365	61.8	40.3		0.312	804	525
	0.500	18.7	12.2		0.375	747	487
12.750	0.330	125.5	81.9	30.000	0.250	1,167	762
	0.400	95.9	62.6		0.312	1,106	722
	0.500	60.2	39.3		0.375	1,046	683
14.000	0.250	196	128				
	0.375	142	93				
	0.438	118	77				
	0.500	91	59				

TABLE TWO
WEIGHT IN POUNDS PER LINEAL FOOT ADDED
BY VARIOUS THICKNESSES OF CONCRETE

Pipe Size O.D.	Thickness of Concrete	Standard Concrete at 140# /Cu. Ft.	Barite Concrete at 190# /Cu. Ft.	Pipe Size O.D.	Thickness of Concrete	Standard Concrete at 140# /Cu. Ft.	Barite Concrete at 190# /Cu. Ft.
Inches				Inches			
6-5/8	3/4	17-8	24.1	22	1	71.7	97.3
	1	24.4	33.2		1-1/4	90.5	122.8
					1-1/2	109.6	148.6
8-5/8	3/4	22.3	30.3		1-3/4	129.1	175.2
	1	30.6	41.5		2	148.8	202.0
	1-1/4	39.3	53.8		2-1/4	169.4	229.8
10-3/4	3/4	27.1	36.6	24	1	77.9	105.7
	1	37.0	50.3		1-1/4	98.3	133.5
	1-1/4	47.2	64.0		1-1/2	118.8	161.3
	1-1/2	57.9	78.8		1-3/4	140.0	190.0
					2	161.2	218.7
12-3/4	3/4	31.8	43.1		2-1/4	183.1	248.4
	1	43.1	58.8		2-1/2	205.6	279.0
	1-1/4	54.8	74.4				
	1-1/2	66.8	90.8	26	1-1/4	105.9	143.7
					1-1/2	128.0	173.8
14	3/4	34.6	47.0		1-3/4	150.2	203.9
	1	47.0	63.7		2	173.5	235.4
	1-1/4	59.7	80.9		2-1/2	196.6	266.9
	1-1/2	72.7	99.0		2-1/2	220.5	299.4
	1-3/4	85.1	117.7				
				28	1-1/4	113.4	153-8
16	1	53.1	72.0		1-1/2	137.3	186.3
	1-1/4	67.3	91.5		1-3A	161.2	218.7
	1-1/2	81.8	111.2		2	185.8	252.1
	1-3A	96.9	131.6		2-1/4	210.3	285.5
	2	113.1	152.5		2-1/2	235.6	319.7
					2-3/4	262.9	356.8
18	1	59.2	80.4				
	i-iA	75.1	101.9	30	1-1/2	146.1	198.3
	1-1/2	91.2	101.9		1-3/4	172.1	233.6
	1-3A	107.7	146.4		2	198.0	268.8
	2	124.9	I69.6		2-1/4	224.0	304.0
					2-1/2	251.3	341.1
20	1	65.4	88.8		2-3/4	278.6	378.1
	1-1/4	82.6	112.1		3	306.6	416.1
	1-1/2	100.4	136.2				
	1-3/4	118.5	160.8				
	2	137.3	186.3				

TABLE THREE
BUOYANCY
In Pounds Per Linear Foot

Outside Diameter of Pipe and Coatings Inches	Buoyancy - Lb./Lin.Ft.			Outside Diameter of Pipe and Coatings Inches	Buoyancy - Lb./Lin.Ft.		
	In Fresh Water at 62.45# /Cu.Ft.	In Sea Bed Water at 74.00# /Cu.Ft.	In Silt Laden Water at 85.00# /Cu.Ft.		In Fresh Water at 62.45# /Cu.Ft.	In Sea Bed Water at 74.00# /Cu.Ft.	In Silt Laden Water at 85.00# /Cu.Ft.
4-1/2	6.89	8.17	9.38	9-1/2	30.74	36.42	41.84
4-5/8	7.29	8.64	9.92	9-5/8	31.56	37.39	42.95
4-3/4	7.69	9.11	10.46	9-3/4	32.38	38.37	44.07
4-7/8	8.09	9.59	11.02	9-7/8	33.22	39.36	45.21
5	8.52	10.09	11.59	10	34.06	40.36	46.36
5-1/8	8.95	10.60	12.18	10-1/8	34.92	41.37	47.52
5-1/4	9.39	11.12	12.78	10-1/4	35.78	42.40	48.71
5-3/8	9.84	11.66	13.40	10-3/8	36.66	43.45	49.90
5-1/2	10.30	12.21	14.03	10-1/2	37.55	44.50	51.11
5-5/8	10.78	12.77	14.67	10-5/8	38.45	45.56	52.33
5-3/4	11.26	13.34	15.33	10-3/4	39.36	46.64	53.58
5-7/8	11.76	13.93	16.01	10-7/8	40.28	47.73	54.83
6	12.26	14.53	16.69	11	41.21	48.83	56.09
6-1/8	12.78	15.14	17.39	11-1/8	42.15	49.95	57.38
6-1/4	13.31	15.77	18.11	11-1/4	43.11	51.08	58.68
6-3/8	13.85	16.41	18.84	11-3/8	44.07	52.22	59.98
6-1/2	14.39	17.05	19.58	11-1/2	45.05	53.38	61.31
6-5/8	14.95	17.72	20.35	11-5/8	46.03	54.55	62.65
6-3/4	15.52	18.39	21.12	11-3/4	47.02	55.72	64.01
6-7/8	16.10	19.08	21.91	11-7/8	48.03	56.91	65.37
7	16.69	19.77	22.71	12	49.05	58.12	66.76
7-1/8	17.29	20.49	23.54	12-1/8	50.07	59.33	68.15
7-1/4	17.90	21.22	24.37	12-1/4	51.12	60.57	69.57
7-3/3	18.53	21.96	25.22	12-3/6	52.16	61.80	70.99
7-1/2	19.16	22.70	26.08	12-1/2	53.22	63.06	72.44
7-5/8	19.60	23.47	26.95	12-5/8	54. 29	64.33	73.89
7-3/4	20.46	24.24	27.85	12-3/4	55.37	65.61	75.36
7-7/8	21.12	25.03	28.75	12-7/8	56.46	66.90	76.85
8	21.80	25.83	29.67	13	57.56	68.21	78.34
8-1/8	22.49	26.65	30.61	13-1/8	58.68	69.53	79.87
8-1/4	23.16	27.47	31.55	13-1/4	59.80	70.86	81.39
8-3/8	23.89	28.31	32.52	13-3/8	60.93	72.20	82.93
8-1/2	24.61	29.16	33.50	13-1/2	62.08	73.56	84.49
8-5/8	25.34	30.02	34.48	13-5/8	63.23	74.93	86.06
8-3/4	26.08	30.90	35-50	13-3/4	64.40	76.31	87.65
8-7/8	26.83	31.79	36.52	13-7/8	65.57	77.70	89.25
9	27.59	32.69	37.55	14	66.76	79.11	90.87
9-1/8	28.36	33.60	38.60	14-1/8	67.96	80.53	92.50
9-1/4	29.15	34.54	39.67	14-1/4	69.16	81.96	94.14
9-3/8	29.94	35.48	40.75	14-3/8	70.38	83.40	95.80

TABLE THREE
BUOYANCY
In Pounds Per Linear Foot

Outside Diameter of Pipe and Coatings Inches	Buoyancy - Lb./Lin.Ft.			Outside Diameter of Pipe and Coatings Inches	Buoyancy - Lb./Lin.Ft.		
	In Fresh Water at 62.45# /Cu.Ft.	In Sea Bed Water at 74.00# /Cu.Ft.	In Silt Laden Water at 85.00# /Cu.Ft.		In Fresh Water at 62.45# /Cu.Ft.	In Sea Bed Water at 74.00# /Cu.Ft.	In Silt Laden Water at 85.00# /Cu.Ft.
14-1/2	71.61	84.86	97.47	19-1/2	129.52	153.47	176.28
14-5/8	72.85	86.33	99.16	19-5/8	131.18	155.44	178.55
14-3/4	74.10	87.81	100.86	19-3/4	132.86	157.43	180.83
14-7/8	75.36	89.30	102.58	19-7/8	134.54	159.43	183.12
15	76.64	90.81	104.31	20	136.24	161.44	185.44
15-1/8	77.92	92.33	106.05	20-1/8	137.95	163.47	187.77
15-1/4	79.21	93.86	107.81	20-1/4	139.67	165.50	190.10
15-3/8	80.52	95.41	109.59	20-3/8	141.40	167.55	192.46
15-1/2	81.83	96.96	111.38	20-1/2	143.14	169.62	194.63
15-5/8	83.16	98.54	113.19	20-5/8	144.89	171.69	197.21
15-3/4	84.49	100.12	115.01	20-3/4	146.65	173.77	199.61
15-7/8	85.84	101.71	116.83	20-7/8	148.42	175.86	202.02
16	87.19	103.32	118.68	21	150.20	177.98	204.44
16-1/8	88.56	104.94	120.54	21-1/8	152.00	180.12	206.89
16-1/4	89.94	106.57	122.42	21-1/4	153.81	182.25	209.35
16-3/8	91-33	108.23	124.31	21-3/8	155.62	184.40	211.61
16-1/2	92.73	109.38	126.22	21-1/2	157.44	186.56	214.29
16-5/8	94.14	111.56	128.14	21-5/8	159.28	188.74	216.79
16-3/4	95.56	113.23	130.07	21-3/4	161.13	190.93	219.31
16-7/8	96.99	114.93	132.01	21-7/8	162.99	193.13	221.64
17	98.43	116.64	133.98	22	164.86	195.35	224.36
17-1/8	99.89	118.36	135.96	22-1/8	166.74	197.57	226.94
17-1/4	101.35	120.09	137.95	22-1/4	168.62	199.81	229.51
17-3/8	102.82	121.84	139.95	22-3/8	170.52	202.06	232.09
17-1/2	104.31	123.60	141.98	22-1/2	172.43	204.32	234.69
17-5/8	105.81	125.38	144.02	22-5/8	174.35	206.60	237.31
17-3/4	107.31	127.16	146.06	22-3/4	176.28	208.89	239.94
17-7/8	108.83	128.96	148.13	22-7/8	178.23	211.19	242.56
18	110.36	130.77	150.20	23	180.18	213.50	245.24
18-1/8	111.90	132.59	152.30	23-1/8	182.15	215.84	247.92
18-1/4	113.44	134.42	154.40	23-1/4	184.12	218.17	250.61
18-3/8	115.00	136.27	156.53	23-3/8	186.11	220.53	253.31
18-1/2	116.58	138.14	158.67	23-1/2	188.10	222.89	256.02
18-5/8	118.16	140.01	160.82	23-5/8	190.10	225.26	256.75
18-3/4	119.75	141.90	162.99	23-3/4	192.12	227.65	261.49
18-7/8	121.35	143.79	165.16	23-7/8	194.15	230.06	264.26
19	122.96	145.70	167.36	24	196.19	232.48	267.04
19-1/8	124.58	147.62	169.57	24-1/8	198.24	234.91	269.82
19-1/4	126.22	149.56	171.79	24-1/4	200.30	237.34	272.62
19-3/8	127.86	151.51	174.03	24-3/8	202.37	239.80	275.44

TABLE THREE
BUOYANCY
In Pounds Per Linear Foot

Outside Diameter of Pipe and Coatings Inches	Buoyancy - Lb./Lin.Ft.			Outside Diameter of Pipe and Coatings Inches	Buoyancy - Lb./Lin.Ft.		
	In Fresh Water at 62.45# /Cu.Ft.	In Sea Bed Water at 74.00# /Cu.Ft.	In Silt Laden Water at 85.00# /Cu.Ft.		In Fresh Water at 62.45# /Cu.Ft.	In Sea Bed Water at 74.00# /Cu.Ft.	In Silt Laden Water at 85.00# /Cu.Ft.
24-1/2	204.45	242.26	278.27	27-3/4	262.29	310.80	357.00
24-5/8	206.54	244.74	281.12	27-7/8	264.66	313.60	360.22
24-3/4	206.70	247.30	284.06	28	267.04	316.42	363.46
24-7/8	210.76	249.74	286.86	28-1/8	269.43	319.26	366.72
25	212.88	252.25	289.75	28-1/4	271.83	322.10	369.98
25-1/8	215.02	254.78	292.66	28-3/8	274.24	324.96	373.26
25-1/4	217.16	257.32	295.57	28-1/2	276.66	327.83	376.56
25-3/8	219.31	259.87	298.50	28-5/8	279.09	330.71	379.87
25-1/2	221.48	262.44	301.45	28-3/4	281.53	333.60	383.19
25-5/8	223.66	265.02	304.42	26-7/8	283.99	336.51	386.53
25-3/4	225.84	267.61	307.39	29	286.45	339.43	389.89
25-7/6	228.04	270.22	310.39	29-1/8	268.92	342.36	393.25
26	230.25	272.84	313-40	29-1/4	291.41	345.31	396.64
26-1/8	232.47	275.47	316.41	29-3/8	293.91	348.27	400.04
26-1/4	234.70	278.11	319.45	29-1/2	296.41	351.23	403.44
26-3/8	236.94	280.76	322.50	29-5/8	298.93	354.22	406.87
26-1/2	239.19	283.43	325.56	29-3/4	301.46	357.21	410.31
26-5/8	241.45	286.11	328.64	29-7/8	304.00	360.22	413.77
26-3/4	243.72	288.80	331.73	30	306.55	363.24	417.24
26-7/8	246.01	291.51	334.84	30-1/8	309.11	366.28	420.72
27	248.30	294.22	337.96	30-1/4	311.68	369.32	424.22
27-1/8	250.61	296.95	341.10	30-3/8	314.26	372.38	427.74
27-1/4	252.92	299.70	344.25	30-1/2	316.85	375.45	431.26
27-3/8	255.25	302.45	347.41	30-5/8	319.45	378.53	434.80
27-1/2	257.58	305.22	350.59	30-3/4	322.07	381.63	438.36
27-5/8	259.93	308.00	353.79	30-7/8	324.69	384.74	441.93

TABLE FOUR
APPROXIMATE WEIGHT PER LINEAR FOOT OF THE COATING ONLY

Pipe Coated with Coal Tar Enamels and a Single Wrapper of Felt or Glass with a Total Average Thickness of 3/16"

Outside Diameter of Bare Pipe	Outside Diameter of Coated Pipe	Wt./Lin. Ft. of Coating Only
4-1/2"	4-7/8"	.97#
6-5/8"	7"	1.43#
8-5/8"	9"	1.85#
10-3/4"	11-1/8"	2.31#
12-3/4"	13-1/8"	2.71#
14"	14-3/8"	2.98#
16"	16-3/8"	3.41#
18"	18-3/8"	3.82#
20"	20-3/8"	4.23#
22"	22-3/8"	4.67#
24"	24-3/8"	5.07#
26"	26-3/8"	5.52#
28"	28-3/8"	5.95#
30"	30-3/8"	6.37#

CHART FIVE

EFFECTIVENESS OF CONCRETE SUBMERGED IN FLUID BACKFILL

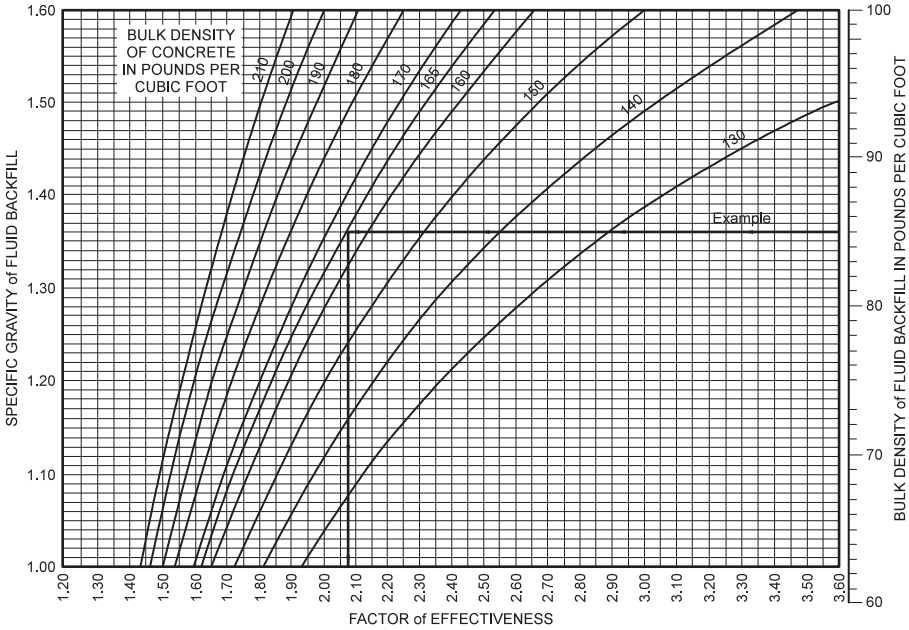

TABLE SIX
WEIGHT OF CONCRETE REQUIRED IN POUNDS PER LINEAL FOOT TO GIVE
A NEGATIVE BUOYANCY OF 20# PER LINEAL FOOT IN FRESH WATER AT
62.45# PER CUBIC FOOT

Pipe Size Inches		Standard Concrete at 140# /Cu. Ft.	Barite Concrete at 190# /Cu. Ft.	Pipe Size Inches		Standard Concrete at 140# /Cu. Ft.	Barite Concrete at 190# /Cu. Ft.
O.D.	Wall Thickness			O.D.	Wall Thickness		
4.500	0.237	29.5	24.3	16.000	0.250	119	98
	0.337	21.9	18.1		0.375	81	67
	0.531	8.2	6.7		0.500	45	37
	0.674	-	-				
				18.000	0.250	152	125
5.563	0.258	29.3	24.2		0.375	108	89
	0.375	18.1	14.9		0.500	69	57
	0.625	-	-		0.562	47	39
	0.750	-	-				
				20.000	0.250	188	155
6.625	0.280	29.4	24.2		0.375	141	116
	0.432	12.1	10.0		0.500	94	77
	0.718	-	-		0.593	61	51
	0.864	-	-				
				22.000	0.250	231	191
7.625	0.430	12.9	10.6		0.312	206	170
	0.625	-	-		0.375	179	148
	0.920	-	-				
				24.000	0.250	278	229
8.625	0.322	31.0	25-6		0.375	220	182
	0.500	4.2	3-5		0.500	166	137
	0.875	-	-		0.687	83	69
	0.906	-	-				
				26.000	0.250	332	274
10.750	0.365	34.9	28.8		0.312	301	249
	0.500	9.2	7.6		0.375	267	221
12.750	0.330	58.1	47.9	30.000	0.250	449	371
	0.406	40.4	33.3		0.312	413	341
	0.500	19.1	15.7		0.375	377	311
14.000	0.250	90	75				
	0.375	58	48				
	0.438	43	36				
	0.500	27	22				

TABLE SIX
WEIGHT OF CONCRETE REQUIRED IN POUNDS PER LINEAL FOOT TO GIVE
A NEGATIVE BUOYANCY OF 20# PER LINEAL FOOT IN SEA BED WATER AT
74.00# PER CUBIC FOOT

Pipe Size Inches		Standard Concrete at 140# /Cu. Ft.	Barite Concrete at 190# /Cu. Ft.	Pipe Size Inches		Standard Concrete at 140# /Cu. Ft.	Barite Concrete at 190# /Cu. Ft.
O.D.	Wall Thickness			O.D.	Wall Thickness		
4.500	0.237	37.8	29.2	16.000	0.250	176	136
	0.337	28.9	22.3		0.375	132	102
	0.531	12.8	9.9		0.500	89	69
	0.674	2.3	1.8				
				18.000	0.250	223	172
5.563	0.258	39.1	30.2		0.375	172	133
	0.375	25.9	20.0		0.500	125	97
	0.625	0.1	0.1		0.562	100	77
	0.750	-	-				
				20.000	0.250	278	215
6.625	0.280	41.1	31.7		0.375	223	172
	0.432	20.7	16.0		0.500	168	129
	0.718	-	-		0.593	129	100
	0.864	-	-				
				22.000	0.250	337	260
7.625	0.430	23.6	18.3		0.312	308	238
	0.625	-	-		0.375	276	213
	0.920	-	-				
				24.000	0.250	407	314
8.625	0.322	47.3	36.5		0.375	339	262
	0.500	15.8	12.2		0.500	276	213
	0.875	-	-		0.687	178	138
	0.906	-	-				
				26.000	0.250	484	373
10.750	0.365	57.6	44.5		0.312	448	346
	0.500	27.4	21.1		0.375	407	314
12.750	0.330	91.2	70.5	30.000	0.250	651	503
	0.406	70.5	54.4		0.312	609	470
	0.500	45.4	35.1		0.375	566	437
14.000	0.250	134	103				
	0.375	95	74				
	0.438	78	61				
	0.500	59	46				

TABLE SIX
WEIGHT OF CONCRETE REQUIRED IN POUNDS PER LINEAL FOOT TO GIVE
A NEGATIVE BUOYANCY OF 20# PER LINEAL FOOT IN SILT LADEN WATER AT
85.00# PER CUBIC FOOT

Pipe Size Inches		Standard Concrete at 140# /Cu. Ft.	Barite Concrete at 190# /Cu. Ft.	Pipe Size Inches		Standard Concrete at 140# /Cu. Ft.	Barite Concrete at 190# /Cu. Ft.
O.D.	Wall Thickness			O.D.	Wall Thickness		
4.500	0.237	49.0	34.9	16.000	0.250	252	179
	0.337	38.4	27.3	.	0.375	199	141
	0.531	19.0	13.5		0.500	148	105
	0.674	6.4	4.5				
				18.000	0.250	321	228
5.563	0.258	52.3	37.2		0.375	260	185
	0.375	36.5	26.0		0.500	204	145
	0.625	5.5	3.9		0.562	173	123
	0.750		-				
				20.000	0.250	394	281
6.625	0.280	56.8	40.4		0.375	328	233
	0.432	32.3	23.0		0.500	262	186
	0.718	-	-		0.593	216	154
	0.864	-	-				
				22.000	0.250	481	342
7.625	0.430	38.1	27.1		0.312	445	317
	0.625	3.3	2.4		0.375	407	290
	0.920	-	-				
				24.000	0.250	578	411
6.625	0.322	69.1	49.1		0.375	496	353
	0.500	31.3	22.3		0.500	420	299
	0.875	-	-		0.687	303	215
	0.906	-	-				
				26.000	0.250	687	489
10.750	0.365	88.0	62.6		0.312	644	458
	0.500	51.7	36.8		C.375	596	424
12.750	0.330	135.8	96.6	30.000	0.250	924	657
	0.406	110.9	78.8		0.312	873	621
	0.500	80.8	57.5		0.375	822	585
14.000	0.250	193	138				
	0.375	148	105				
	0.438	127	91				
	0.500	104	74				

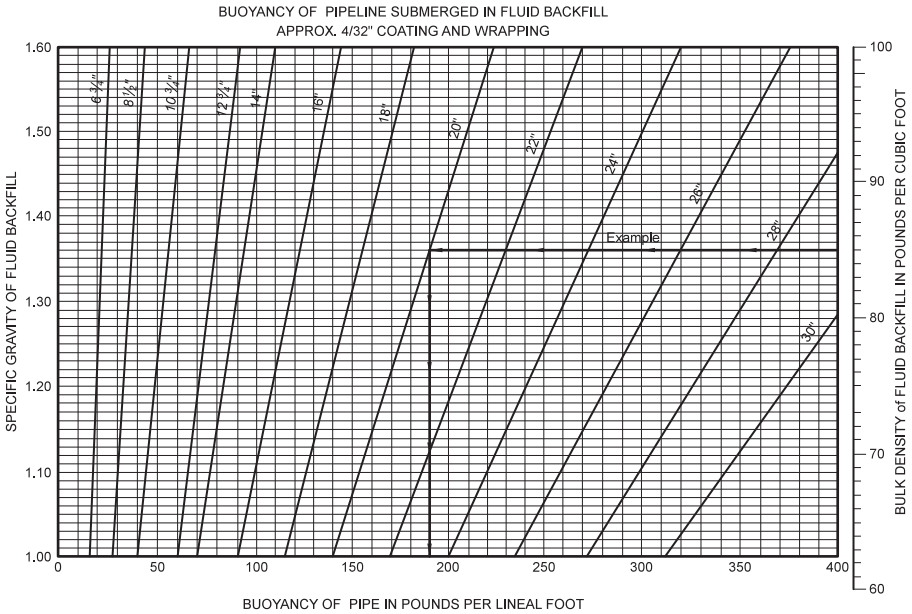
BUOYANCY OF PIPELINE SUBMERGED IN FLUID BACKFILL
APPROX. 4/32" COATING AND WRAPPING
SPECIFIC GRAVITY OF FLUID BACKFILL
1.60
1.50
1.40
1.30
1.20
1.10
1.00
0
50
100
150
200
250
300
350
400
BUOYANCY OF PIPE IN POUNDS PER LINEAL FOOT
BULK DENSITY of FLUID BACKFILL IN POUNDS PER CUBIC FOOT
100
90
80
70
60
6 5/8"
8 5/8"
10 3/4"
12 3/4"
14"
16"
18"
20"
22"
24"
26"
28"
30"
Example

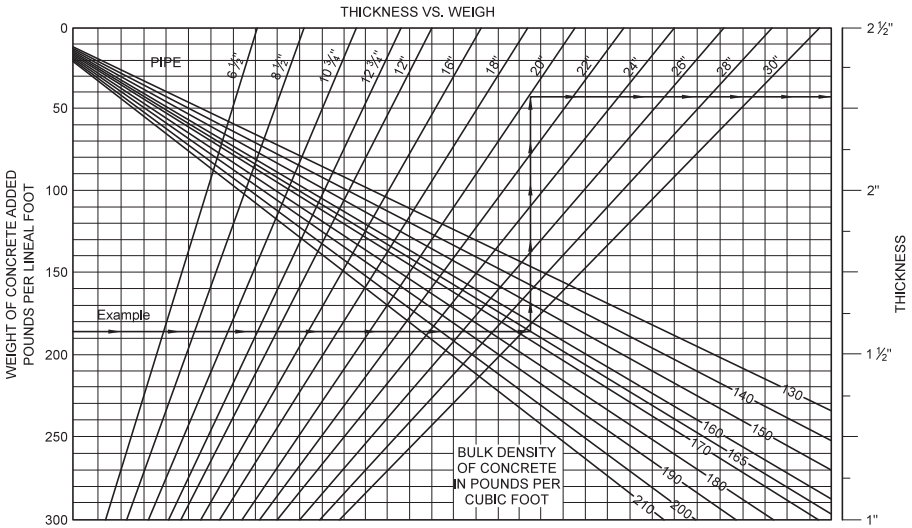
THICKNESS VS. WEIGH
WEIGHT OF CONCRETE ADDED
POUNDS PER LINEAL FOOT
0
50
100
150
200
250
300
THICKNESS
2 ½"
2"
1 ½"
1"
PIPE
6 5/8"
8 5/8"
10 3/4"
12 3/4"
12"
16"
18"
20"
22"
24"
26"
28"
30"
Example
130
140
150
160
165
170
180
190
200
210
BULK DENSITY
OF CONCRETE
IN POUNDS PER
CUBIC FOOT

Appendix 7

Carbon Steel Pipe

Nominal Pipe Size	DN	Outside Diameter	Schedule	Wall Thickness	Wall Thickness less Mill Tolerance	Inside Diameter	Inside Diameter	Flow Area	Row Area	Metal Area
in	mm	in		in	in	in	ft	in^2	ft^2	in^2
1/8	6	0.405	10S	0.049	0.043	0.307	0.026	0.074	0.00051	0.055
			40/Std	0.068	0.060	0.269	0.022	0.057	0.00039	0.072
			80/XS	0.095	0.083	0.215	0.018	0.036	0.00025	0.093
1/4	8	0.540	10S	0.065	0.057	0.410	0.034	0.132	0.00092	0.097
			40/Std	0.088	0.077	0.364	0.030	0.104	0.00072	0.125
			80/XS	0.119	0.104	0.302	0.025	0.072	0.00050	0.157
3/8	10	0.675	10S	0.065	0.057	0.545	0.045	0.233	0.00162	0.125
			40/Std	0.091	0.080	0.493	0.041	0.191	0.00133	0.167
			80/XS	0.126	0.110	0.423	0.035	0.141	0.00098	0.217
1/2	15	0.840	5S	0.065	0.057	0.710	0.059	0.396	0.00275	0.158
			10S	0.083	0.073	0.674	0.056	0.357	0.00248	0.197
			40/Std	0.109	0.095	0.622	0.052	0.304	0.00211	0.250
			80/XS	0.147	0.129	0.546	0.046	0.234	0.00163	0.320
			160	0.188	0.165	0.464	0.039	0.169	0.00117	0.385
			XXS	0.294	0.257	0.252	0.021	0.050	0.00035	0.504
3/4	20	1.050	5S	0.065	0.057	0.920	0.077	0.665	0.00462	0.201
			10S	0.083	0.073	0.884	0.074	0.614	0.00426	0.252
			40/Std	0.113	0.099	0.824	0.069	0.533	0.00370	0.333
			80/XS	0.154	0.135	0.742	0.062	0.432	0.00300	0.433
			160	0.219	0.192	0.612	0.051	0.294	0.00204	0.572
			XXS	0.308	0.270	0.434	0.036	0.148	0.00103	0.718
1	25	1.315	5S	0.065	0.057	1.185	0.099	1.103	0.00766	0.255
			10S	0.109	0.095	1.097	0.091	0.945	0.00656	0.413
			40/Std	0.133	0.116	1.049	0.087	0.864	0.00600	0.494
			80/XS	0.179	0.157	0.957	0.080	0.719	0.00500	0.639
			160	0.250	0.219	0.815	0.068	0.522	0.00362	0.836
			XXS	0.358	0.313	0.599	0.050	0.282	0.00196	1.076
1 1/4	32	1.660	5S	0.065	0.057	1.530	0.128	1.839	0.01277	0.326
			10S	0.109	0.095	1.442	0.120	1.633	0.01134	0.531
			40/Std	0.140	0.123	1.380	0.115	1.496	0.01039	0.669
			80/XS	0.191	0.167	1.278	0.107	1.283	0.00891	0.881
			160	0.250	0.219	1.160	0.097	1.057	0.00734	1.107
			XXS	0.382	0.334	0.896	0.075	0.631	0.00438	1.534
1 1/2	40	1.900	5S	0.065	0.057	1.770	0.148	2.461	0.01709	0.375
			10S	0.109	0.095	1.682	0.140	2.222	0.01543	0.613
			40/Std	0.145	0.127	1.610	0.134	2.036	0.01414	0.799
			80/XS	0.200	0.175	1.500	0.125	1.767	0.01227	1.068
			160	0.281	0.246	1.338	0.112	1.406	0.00976	1.429
			XXS	0.400	0.350	1.100	0.092	0.950	0.00660	1.885
2	50	2.375	5S	0.065	0.057	2.245	0.187	3.958	0.02749	0.472
			10S	0.109	0.095	2.157	0.180	3.654	0.02538	0.776
			40/Std	0.154	0.135	2.067	0.172	3.356	0.02330	1.075
			80/XS	0.218	0.191	1.939	0.162	2.953	0.02051	1.477
			160	0.344	0.301	1.687	0.141	2.235	0.01552	2.195

Carbon Steel Pipes

Nominal Pipe Size	DN	Outside Diameter	Schedule	Wall Thickness	Wall Thickness less Mill Tolerance	Inside Diameter	Inside Diameter	Row Area	Row Area	Metal Area
in	mm	in		in	in	in	ft	in^2	ft^2	in^2
			XXS	0.436	0.382	1.503	0.125	1.774	0.01232	2.656
2 1/2	65	2.875	5S	0.083	0.073	2.709	0.226	5.764	0.04003	0.728
			10S	0.120	0.105	2.635	0.220	5.453	0.03787	1.039
			40/Std	0.203	0.178	2.469	0.206	4.788	0.03325	1.704
			80/XS	0.276	0.242	2.323	0.194	4.238	0.02943	2.254
			160	0.375	0.328	2.125	0.177	3.547	0.02463	2.945
			XXS	0.552	0.483	1.771	0.148	2.463	0.01711	4.028
3	80	3.500	5S	0.083	0.073	3.334	0.278	8.730	0.06063	0.891
			10S	0.120	0.105	3.260	0.272	8.347	0.05796	1.274
			40/Std	0.216	0.189	3.068	0.256	7.393	0.05134	2.228
			80/XS	0.300	0.263	2.900	0.242	6.605	0.04587	3.016
			160	0.438	0.383	2.624	0.219	5.408	0.03755	4.213
			XXS	0.600	0.525	2.300	0.192	4.155	0.02885	5.466
3 1/2	90	4.000	5S	0.083	0.073	3.834	0.320	11.545	0.08017	1.021
			10S	0.120	0.105	3.760	0.313	11.104	0.07711	1.463
			40/Std	0.226	0.198	3.548	0.296	9.887	0.06866	2.680
			80/XS	0.318	0.278	3.364	0.280	8.888	0.06172	3.678
4	100	4.500	5S	0.083	0.073	4.334	0.361	14.753	0.10245	1.152
			10S	0.120	0.105	4.260	0.355	14.253	0.09898	1.651
			40/Std	0.237	0.207	4.026	0.336	12.730	0.08840	3.174
			80/XS	0.337	0.295	3.826	0.319	11.497	0.07984	4.407
			120	0.438	0.383	3.624	0.302	10.315	0.07163	5.589
			160	0.531	0.465	3.438	0.287	9.283	0.06447	6.621
			XXS	0.674	0.590	3.152	0.263	7.803	0.05419	8.101
5	125	5.563	5S	0.109	0.095	5.345	0.445	22.438	0.15582	1.868
			10S	0.134	0.117	5.295	0.441	22.020	0.15292	2.285
			40/Std	0.258	0.226	5.047	0.421	20.006	0.13893	4.300
			80/XS	0.375	0.328	4.813	0.401	18.194	0.12635	6.112
			120	0.500	0.438	4.563	0.380	16.353	0.11356	7.953
			160	0.627	0.549	4.309	0.359	14.583	0.10127	9.723
			XXS	0.750	0.656	4.063	0.339	12.965	0.09004	11.340
6	150	6.625	5S	0.109	0.095	6.407	0.534	32.240	0.22389	2.231
			10S	0.134	0.117	6.357	0.530	31.739	0.22041	2.733
			40/Std	0.280	0.245	6.065	0.505	28.890	0.20063	5.581
			80/XS	0.432	0.378	5.761	0.480	26.067	0.18102	8.405
			120	0.562	0.492	5.501	0.458	23.767	0.16505	10.705
			160	0.719	0.629	5.187	0.432	21.131	0.14674	13.340
			XXS	0.864	0.756	4.897	0.408	18.834	0.13079	15.637
8	200	8.625	5S	0.109	0.095	8.407	0.701	55.510	0.38549	2.916
			10S	0.148	0.130	8.329	0.694	54.485	0.37837	3.941
			20	0.250	0.219	8.125	0.677	51.849	0.36006	6.578
			30	0.277	0.242	8.071	0.673	51.162	0.35529	7.265
			40/Std	0.322	0.282	7.981	0.665	50.027	0.34741	8.399
			60	0.406	0.355	7.813	0.651	47.943	0.33294	10.483

Carbon Steel Pipe

Nominal Pipe Size	ON	Outside Diameter	Schedule	Wall Thickness	Wall Thickness less Mill Tolerance	Inside Diameter	Inside Diameter	Row Area	Row Area	Metal Area
in	mm	in		in	in	in	ft	in^2	ft^2	in^2
			80/XS	0.500	0.438	7.625	0.635	45.664	0.31711	12.763
			100	0.594	0.520	7.437	0.620	43.440	0.30166	14.987
			120	0.719	0.629	7.187	0.599	40.568	0.28172	17.858
			140	0.812	0.711	7.001	0.583	38.495	0.26733	19.931
			XXS	0.875	0.766	6.875	0.573	37.122	0.25779	21.304
			160	0.906	0.793	6.813	0.568	36.456	0.25317	21.970
10	250	10.750	5S	0.134	0.117	10.482	0.874	86.293	0.59926	4.469
			10S	0.165	0.144	10.420	0.868	85.276	0.59219	5.487
			20	0.250	0.219	10.250	0.854	82.516	0.57303	8.247
			30	0.307	0.269	10.136	0.845	80.691	0.56035	10.072
			40	0.365	0.319	10.020	0.835	78.854	0.54760	11.908
			Std	0.365	0.319	10.020	0.835	78.854	0.54760	11.908
			60/XS	0.500	0.438	9.750	0.813	74.662	0.51849	16.101
			80	0.594	0.520	9.562	0.797	71.810	0.49868	18.952
			100	0.719	0.629	9.312	0.776	68.104	0.47295	22.658
			120	0.844	0.739	9.062	0.755	64.497	0.44789	26.266
			140/XXS	1.000	0.875	8.750	0.729	60.132	0.41758	30.631
			160	1.125	0.984	8.500	0.708	56.745	0.39406	34.018
12	300	12.750	5S	0.156	0.137	12.438	1.037	121.504	0.84378	6.172
			10S	0.180	0.158	12.390	1.033	120.568	0.83728	7.108
			20	0.250	0.219	12.250	1.021	117.859	0.81846	9.817
			30	0.330	0.289	12.090	1.008	114.800	0.79722	12.876
			Std	0.375	0.328	12.000	1.000	113.097	0.78540	14.579
			40	0.406	0.355	11.938	0.995	111.932	0.77730	15.745
			XS	0.500	0.438	11.750	0.979	108.434	0.75301	19.242
			60	0.562	0.492	11.626	0.969	106.157	0.73720	21.519
			80	0.688	0.602	11.374	0.948	101.605	0.70559	26.071
			100	0.844	0.739	11.062	0.922	96.107	0.66741	31.569
			120/XXS	1.000	0.875	10.750	0.896	90.762	0.63030	36.914
			140	1.125	0.984	10.500	0.875	86.590	0.60132	41.086
			160	1.312	1.148	10.126	0.844	80.531	0.55925	47.145
14	350	14.000	5S	0.156	0.137	13.688	1.141	147.153	1.02190	6.785
			10S	0.250	0.219	13.500	1.125	143.139	0.99402	10.799
			20	0.312	0.273	13.376	1.115	140.521	0.97584	13.417
			30/Std	0.375	0.328	13.250	1.104	137.886	0.95754	16.052
			40	0.438	0.383	13.124	1.094	135.276	0.93942	18.662
			XS	0.500	0.438	13.000	1.083	132.732	0.92175	21.206
			60	0.594	0.520	12.812	1.068	128.921	0.89528	25.017
			80	0.750	0.656	12.500	1.042	122.718	0.85221	31.220
			100	0.938	0.821	12.124	1.010	115.447	0.80171	38.491
			120	1.094	0.957	11.812	0.984	109.581	0.76098	44.357
			140	1.250	1.094	11.500	0.958	103.869	0.72131	50.069
			160	1.406	1.230	11.188	0.932	98.309	0.68270	55.629
16	400	16.000	5S	0.165	0.144	15.670	1.306	192.853	1.33926	8.208

Carbon Steel Pipes

Nominal Pipe Size	ON	Outside Diameter	Schedule	Wall Thickness	Wall Thickness less Mill Tolerance	Inside Diameter	Inside Diameter	Row Area	Row Area	Metal Area
in	mm	in		in	in	in	ft	in^2	ft^2	in^2
			10S	0.250	0.219	15.500	1.292	188.692	1.31036	12.370
			20	0.312	0.273	15.376	1.281	185.685	1.28948	15.377
			30/Std	0.375	0.328	15.250	1.271	182.654	1.26843	18.408
			40/XS	0.500	0.438	15.000	1.250	176.714	1.22718	24.347
			60	0.656	0.574	14.688	1.224	169.440	1.17666	31.622
			80	0.844	0.739	14.312	1.193	160.876	1.11719	40.186
			100	1.031	0.902	13.938	1.162	152.577	1.05957	48.484
			120	1.219	1.067	13.562	1.130	144.456	1.00317	56.605
			140	1.438	1.258	13.124	1.094	135.276	0.93942	65.785
			160	1.594	1.395	12.812	1.068	128.921	0.89528	72.141
18	450	18.000	5S	0.165	0.144	17.670	1.473	245.224	1.70294	9.245
			10S	0.250	0.219	17.500	1.458	240.528	1.67033	13.941
			20	0.312	0.273	17.376	1.448	237.131	1.64675	17.337
			Std	0.375	0.328	17.250	1.438	233.705	1.62295	20.764
			30	0.438	0.383	17.124	1.427	230.303	1.59933	24.166
			XS	0.500	0.438	17.000	1.417	226.980	1.57625	27.489
			40	0.562	0.492	16.876	1.406	223.681	1.55334	30.788
			60	0.750	0.656	16.500	1.375	213.824	1.48489	40.644
			80	0.938	0.821	16.124	1.344	204.190	1.41799	50.278
			100	1.156	1.012	15.688	1.307	193.297	1.34234	61.172
			120	1.375	1.203	15.250	1.271	182.654	1.26843	71.815
			140	1.562	1.367	14.876	1.240	173.805	1.20698	80.664
			160	1.781	1.558	14.438	1.203	163.721	1.13695	90.748
20	500	20.000	5S	0.188	0.165	19.624	1.635	302.458	2.10040	11.701
			10S	0.250	0.219	19.500	1.625	298.647	2.07394	15.512
			20/Std	0.375	0.328	19.250	1.604	291.039	2.02110	23.120
			30/XS	0.500	0.438	19.000	1.583	283.528	1.96895	30.631
			40	0.594	0.520	18.812	1.568	277.945	1.93018	36.214
			60	0.812	0.711	18.376	1.531	265.211	1.84174	48.948
			80	1.031	0.902	17.938	1.495	252.719	1.75499	61.440
			100	1.281	1.121	17.438	1.453	238.827	1.65852	75.332
			120	1.500	1.313	17.000	1.417	226.980	1.57625	87.179
			140	1.750	1.531	16.500	1.375	213.824	1.48489	100.335
			160	1.969	1.723	16.062	1.339	202.623	1.40710	111.536
22	550	22.000	5S	0.188	0.165	21.624	1.802	367.250	2.55035	12.883
			10S	0.250	0.219	21.500	1.792	363.050	2.52118	17.082
			20/Std	0.375	0.328	21.250	1.771	354.656	2.46289	25.476
			30/XS	0.500	0.438	21.000	1.750	346.360	2.40528	33.772
			60	0.875	0.766	20.250	1.688	322.062	2.23654	58.070
			80	1.125	0.984	19.750	1.646	306.354	2.12746	73.778
			100	1.375	1.203	19.250	1.604	291.039	2.02110	89.094
			120	1.625	1.422	18.750	1.563	276.116	1.91747	104.016
			140	1.875	1.641	18.250	1.521	261.586	1.81657	118.546
			160	2.125	1.859	17.750	1.479	247.449	1.71840	132.683

Carbon Steel Pipe

Nominal Pipe Size	DN	Outside Diameter	Schedule	Wall Thickness	Wall Thickness less Mill Tolerance	Inside Diameter	Inside Diameter	Flow Area	Flow Area	Metal Area
in	mm	in		in	in	in	ft	in^2	ft^2	in^2
24	600	24.000	5S	0.218	0.191	23.564	1.964	436.101	3.02848	16.287
			10S	0.250	0.219	23.500	1.958	433.736	3.01205	18.653
			20/Std	0.375	0.328	23.250	1.938	424.556	2.94831	27.833
			XS	0.500	0.438	23.000	1.917	415.475	2.88524	36.914
			30	0.562	0.492	22.876	1.906	411.007	2.85422	41.382
			40	0.688	0.602	22.624	1.885	402.002	2.79168	50.387
			60	0.969	0.848	22.062	1.839	382.278	2.65471	70.111
			80	1.218	1.066	21.564	1.797	365.215	2.53621	87.174
			100	1.531	1.340	20.938	1.745	344.318	2.39110	108.071
			120	1.812	1.586	20.376	1.698	326.082	2.26446	126.307
			140	2.062	1.804	19.876	1.656	310.276	2.15469	142.113
			160	2.344	2.051	19.312	1.609	292.917	2.03414	159.472
26	650	26.000	10	0.312	0.273	25.376	2.115	505.750	3.51215	25.179
			Std	0.375	0.328	25.250	2.104	500.740	3.47736	30.189
			20/XS	0.500	0.438	25.000	2.083	490.873	3.40884	40.055
28	700	28.000	10	0.312	0.273	27.376	2.281	588.613	4.08759	27.139
			Std	0.375	0.328	27.250	2.271	583.207	4.05005	32.545
			20/XS	0.500	0.438	27.000	2.250	572.555	3.97607	43.197
			30	0.625	0.547	26.750	2.229	562.001	3.90278	53.751
30	750	30.000	5S	0.250	0.219	29.500	2.458	683.492	4.74647	23.366
			10S	0.312	0.273	29.376	2.448	677.758	4.70665	29.099
			Std	0.375	0.328	29.250	2.438	671.957	4.66637	34.901
			20/XS	0.500	0.438	29.000	2.417	660.519	4.58694	46.338
			30	0.625	0.547	28.750	2.396	649.180	4.50820	57.678
32	800	32.000	10S	0.312	0.273	31.376	2.615	773.187	5.36936	31.060
			Std	0.375	0.328	31.250	2.604	766.990	5.32632	37.257
			20/XS	0.500	0.438	31.000	2.583	754.767	5.24144	49.480
			30	0.625	0.547	30.750	2.563	742.642	5.15724	61.605
			40	0.688	0.602	30.624	2.552	736.569	5.11506	67.678
34	850	34.000	10	0.312	0.273	33.376	2.781	874.899	6.07569	33.020
			Std	0.375	0.328	33.250	2.771	868.306	6.02990	39.613
			20/XS	0.500	0.438	33.000	2.750	855.298	5.93957	52.622
			30	0.625	0.547	32.750	2.729	842.388	5.84992	65.532
			40	0.688	0.602	32.624	2.719	835.918	5.80499	72.001
36	900	36.000	20	0.312	0.273	35.376	2.948	982.895	6.82566	34.981
			Std	0.375	0.328	35.250	2.938	975.905	6.77712	41.970
			XS	0.500	0.438	35.000	2.917	962.112	6.68133	55.763
			30	0.625	0.547	34.750	2.896	948.417	6.58623	69.459
			40	0.750	0.656	34.500	2.875	934.819	6.49180	83.056
42	1100	42.000	20	0.375	0.328	41.250	3.438	1336.403	9.28058	49.038
			XS	0.500	0.438	41.000	3.417	1320.253	9.16842	65.188

Appendix 8

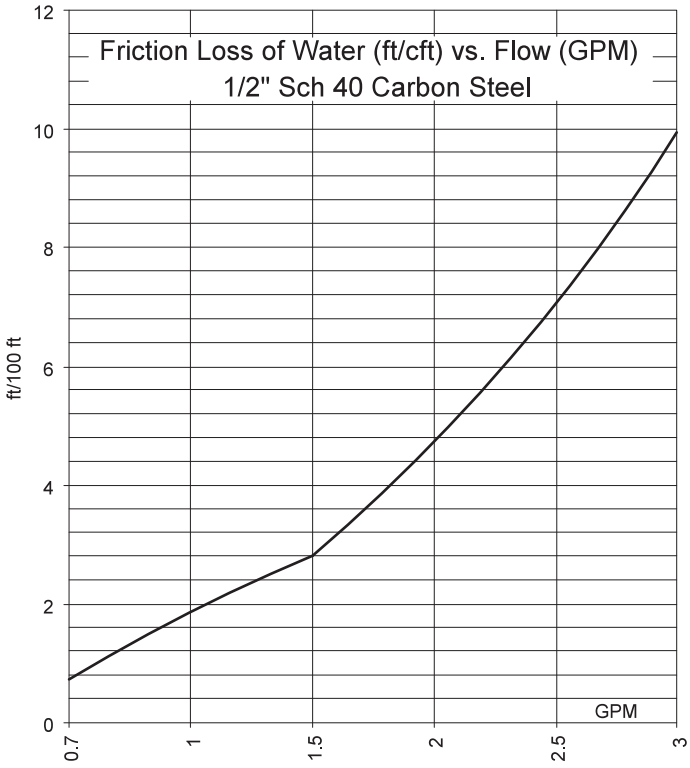

Sch 40 CS 1/2" diameter. discontinuities occur at X-scale changes.

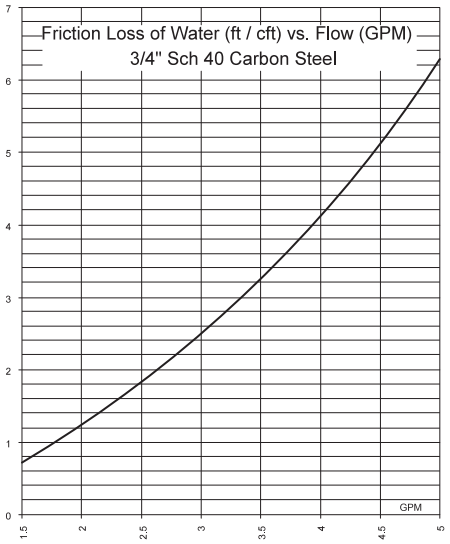

Sch 40 CS 3/4" diameter. Discontinuities occur at X-scale changes.

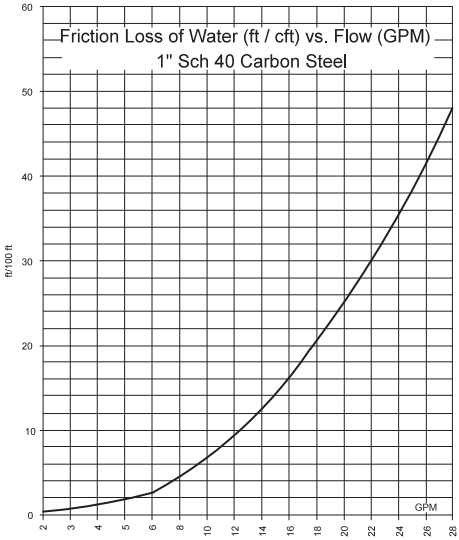

Sch 40 CS 1" diameter. Discontinuities occur at X-scale changes.

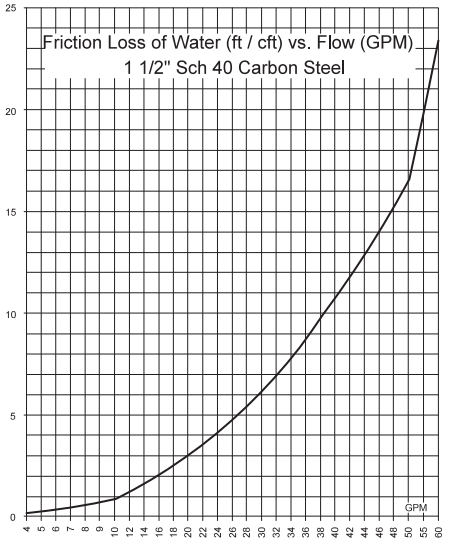

Sch 40 CS 1 1/2" diameter. Discontinuities occur at X-scale changes.

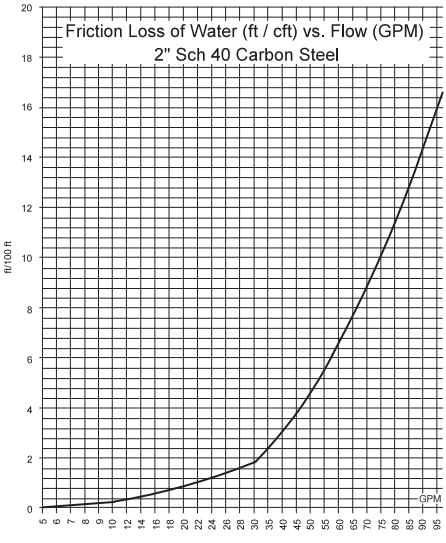

Sch 40 CS 2" diameter. Discontinuities occur at X-scale changes.

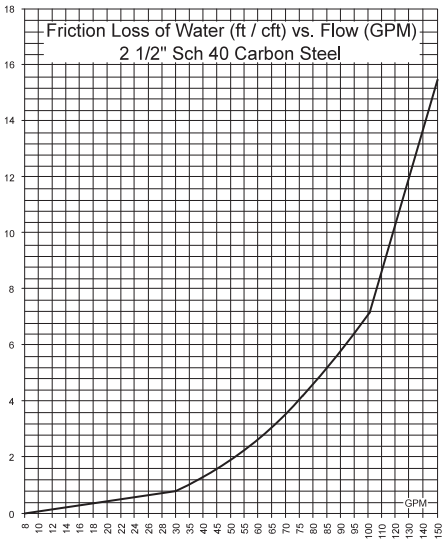

Sch 40 CS 2 1/2" diameter. Discontinuities occur at X-scale changes.

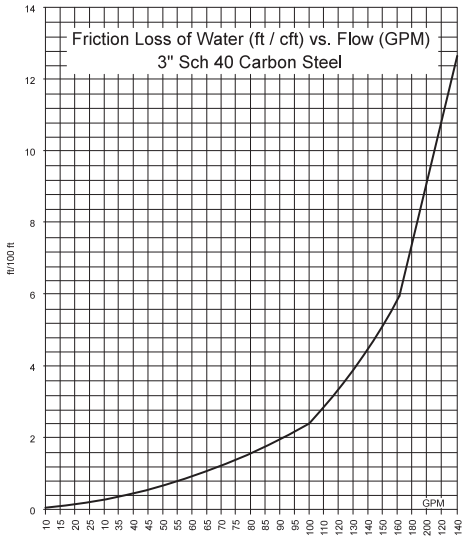

Sch 40 CS 3" diameter. Discontinuities occur at X-scale changes.

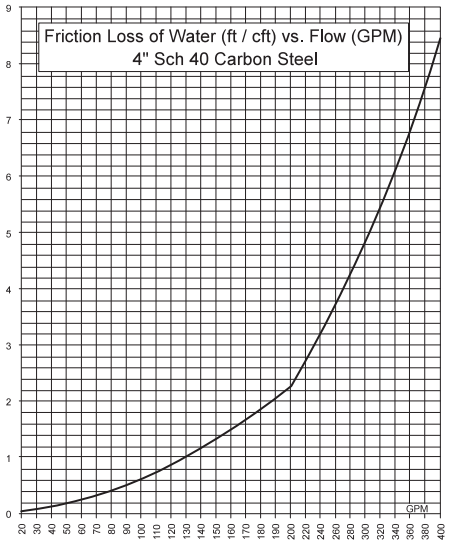

Sch 40 CS 4" diameter. Discontinuities occur at X-scale changes.

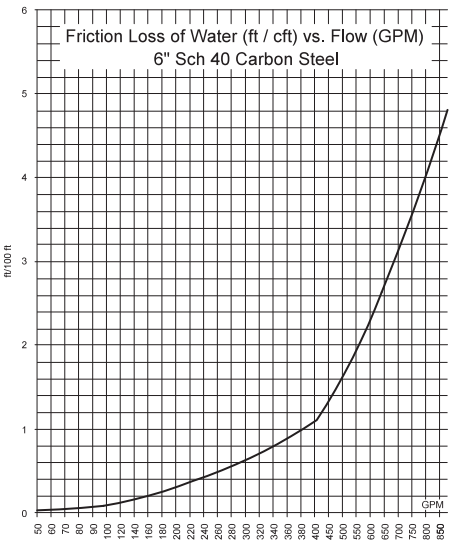

Sch 40 CS 6" diameter. Discontinuities occur at X-scale changes.

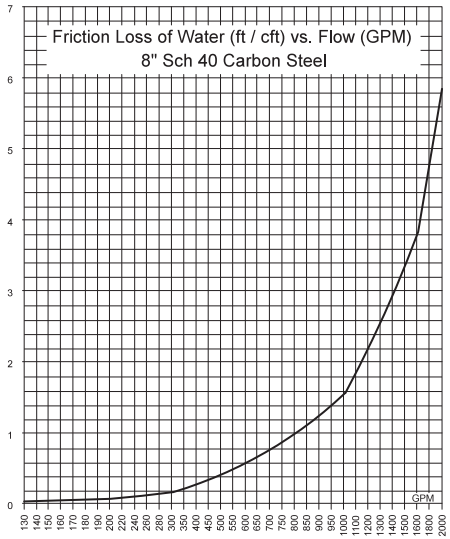

Sch 40 CS 8" diameter. Discontinuities occur at X-scale changes.

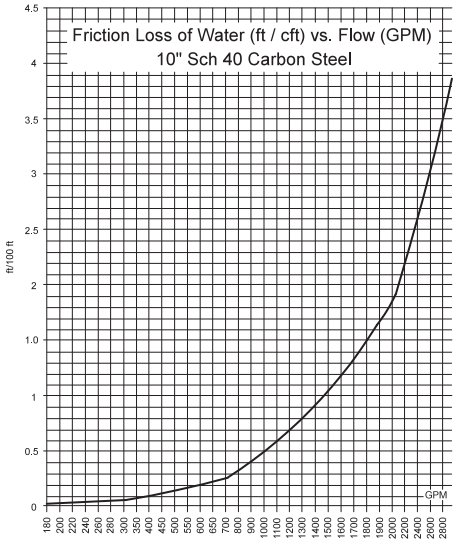

Sch 40 CS 10" diameter. Discontinuities occur at X-scale changes.

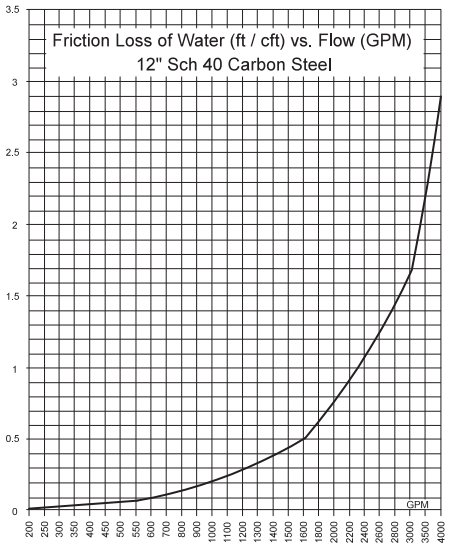

Sch 40 CS 12" diameter. Discontinuities occur at X-scale changes.

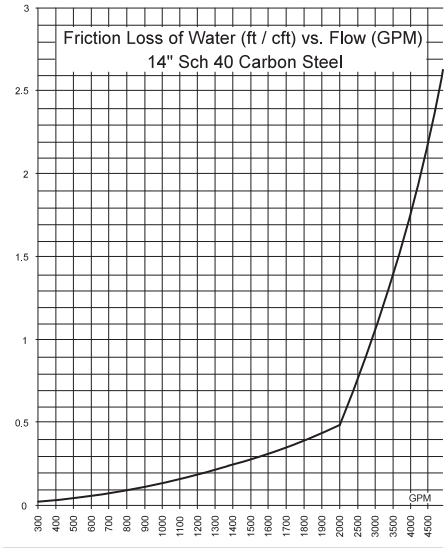

Sch 40 CS 14" diameter. Discontinuities occur at X-scale changes.

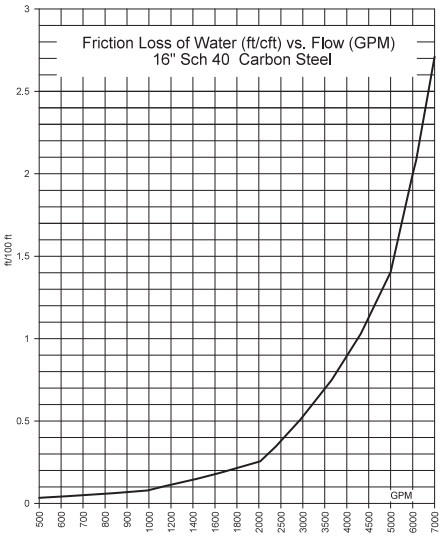

Sch 40 CS 16" diameter. Discontinuities occur at X-scale changes.

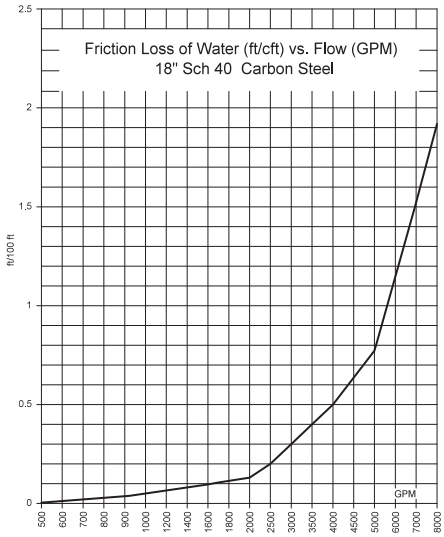

Sch 40 CS 18" diameter. Discontinuities occur at X-scale changes.

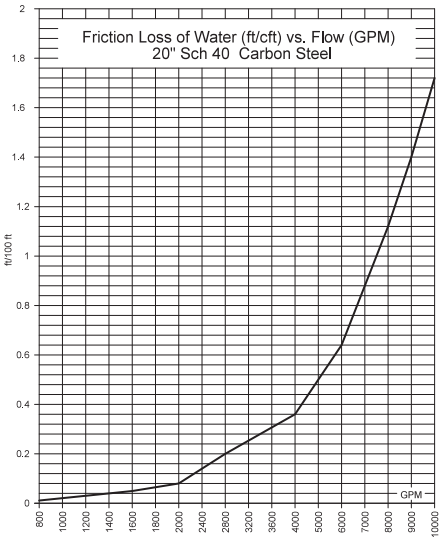

Sch 40 CS 20" diameter. Discontinuities occur at X-scale changes.

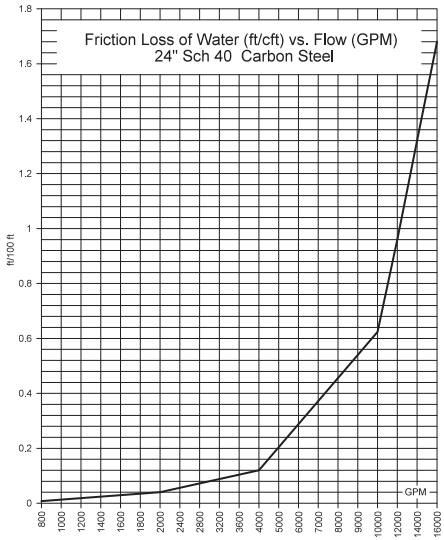

Sch 40 CS 24" diameter. Discontinuities occur at X-scale changes.

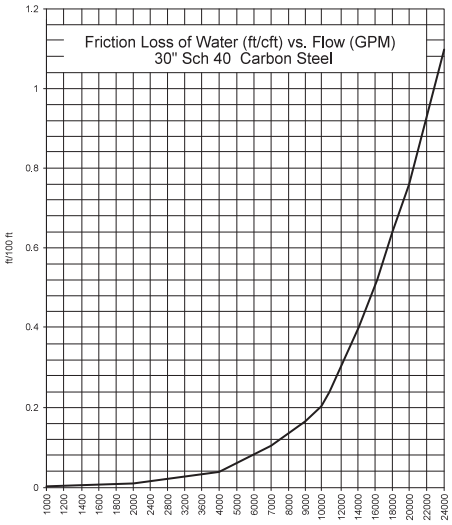

Sch 40 CS 30" diameter. Discontinuities occur at X-scale changes.

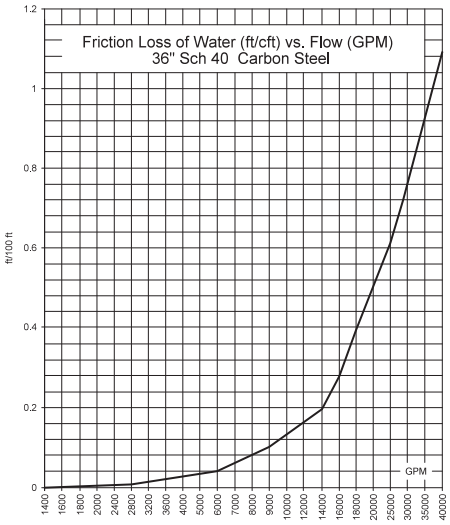

Sch 40 CS 36" diameter. Discontinuities occur at X-scale changes.

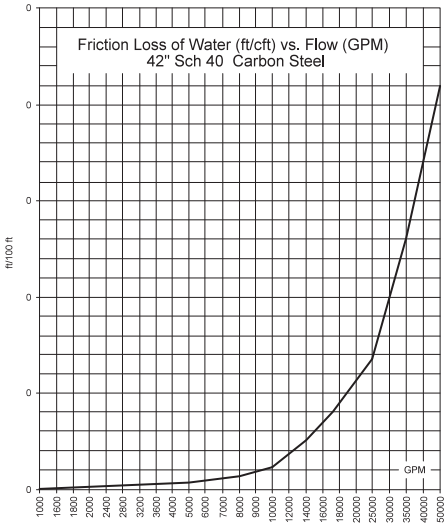

Sch 40 CS 42" diameter. Discontinuities occur at X-scale changes.

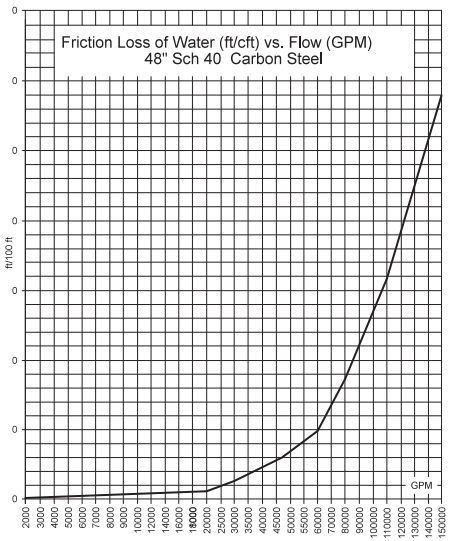

Sch 40 CS 48" diameter. Discontinuities occur at X-scale changes.

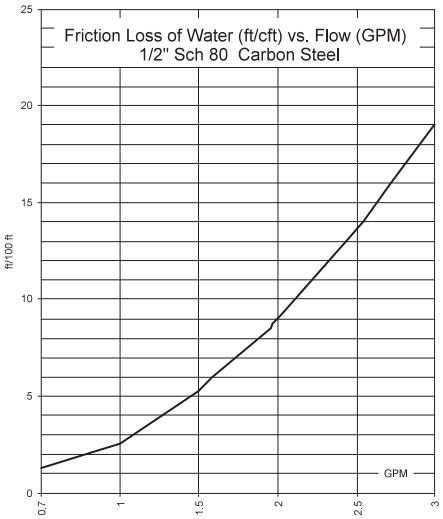

Sch 80 CS 1/2" diameter. Discontinuities occur at X-scale changes.

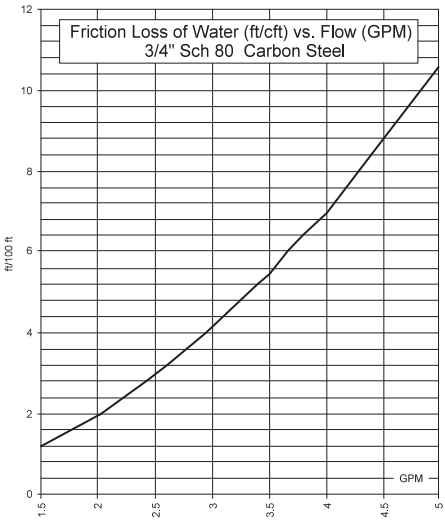

Sch 80 CS 3/4" diameter. Discontinuities occur at X-scale changes.

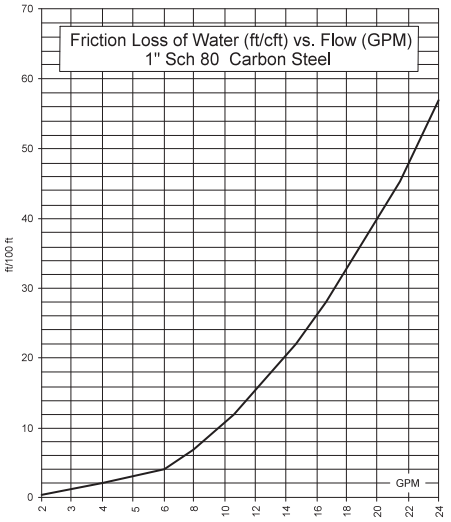

Sch 80 CS 1" diameter. Discontinuities occur at X-scale changes.

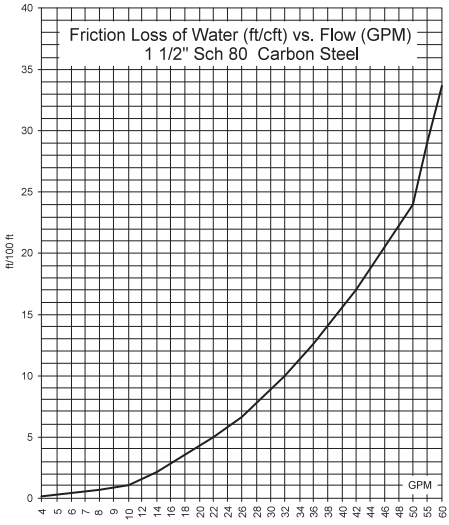

Sch 80 CS 1 1/2" diameter. Discontinuities occur at X-scale changes.

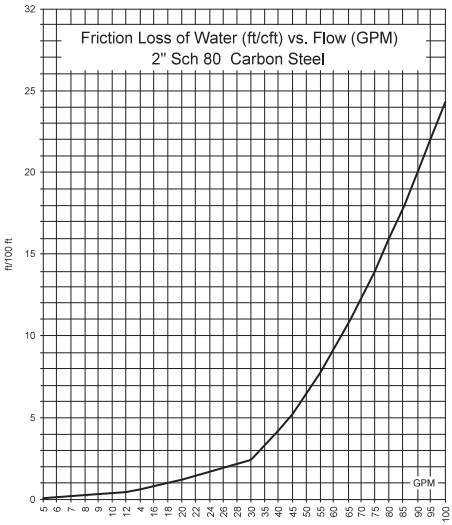

Sch 80 CS 2" diameter. Discontinuities occur at X-scale changes.

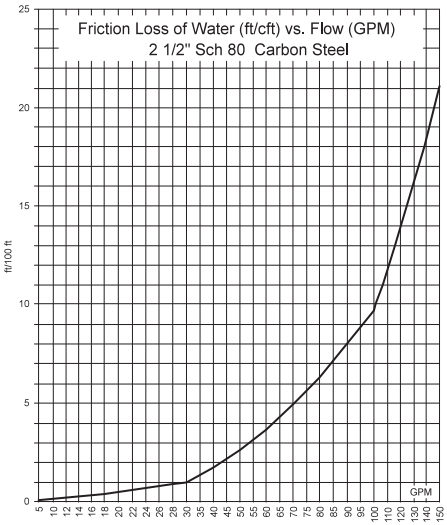

Sch 80 CS 2 1/2" diameter. Discontinuities occur at X-scale changes.

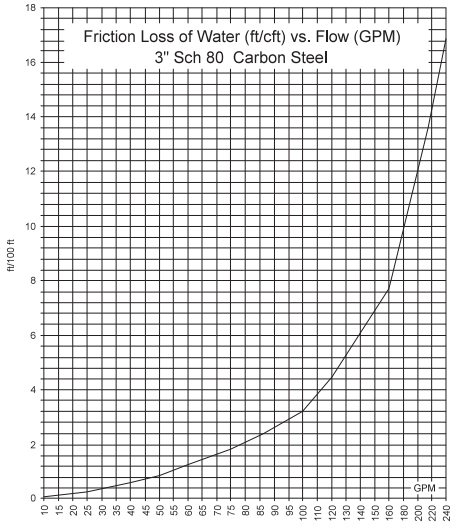

Sch 80 CS 3" diameter. Discontinuities occur at X-scale changes.

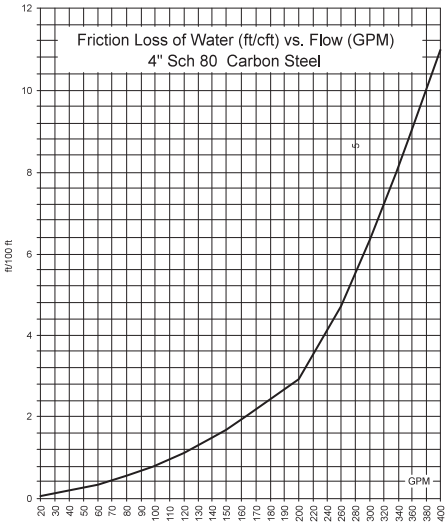

Sch 80 CS 4" diameter. Discontinuities occur at X-scale changes.

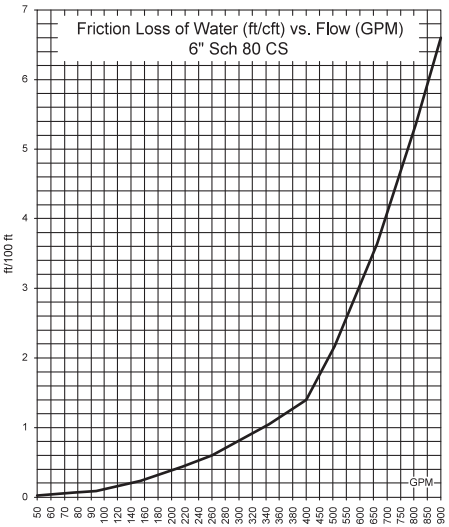

Sch 80 CS 6" diameter. Discontinuities occur at X-scale changes.

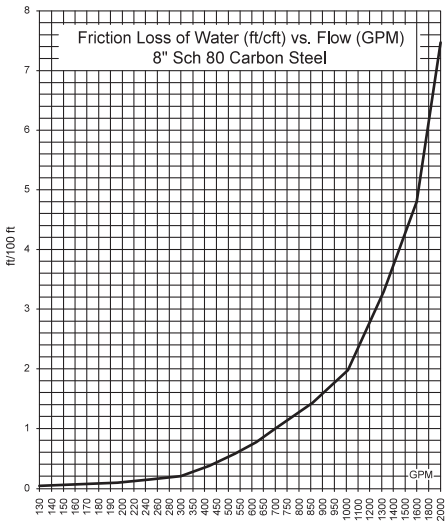

Sch 80 CS 8" diameter. Discontinuities occur at X-scale changes.

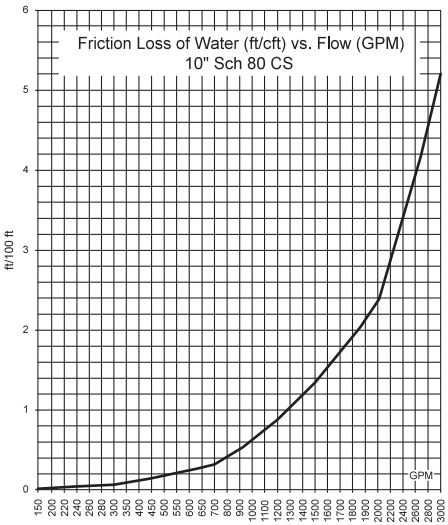

Sch 80 CS 10" diameter. Discontinuities occur at X-scale changes.

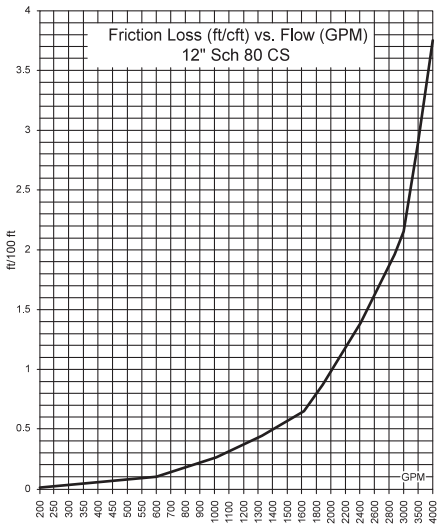

Sch 80 CS 12" diameter. Discontinuities occur at X-scale changes.

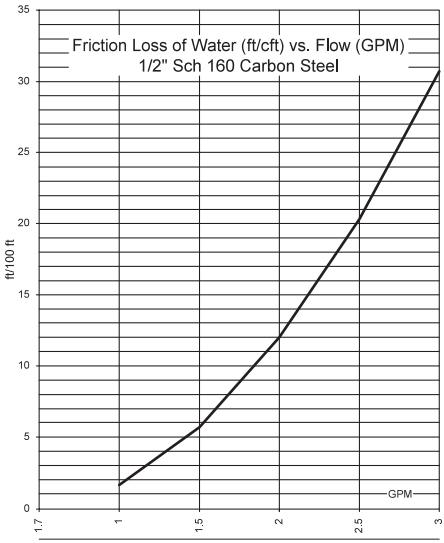

Sch 160 CS ½" diameter. Discontinuities occur at X-scale changes.

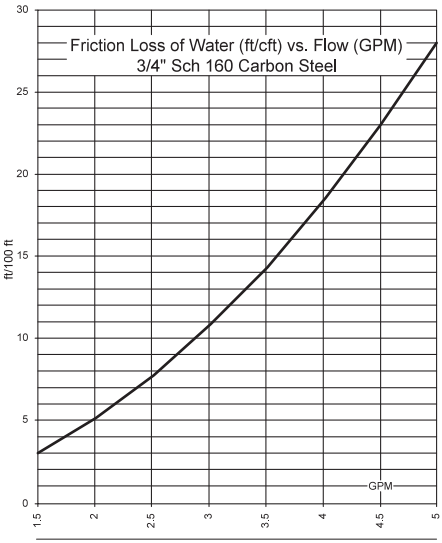

Sch 160 CS ¾" diameter. Discontinuities occur at X-scale changes.

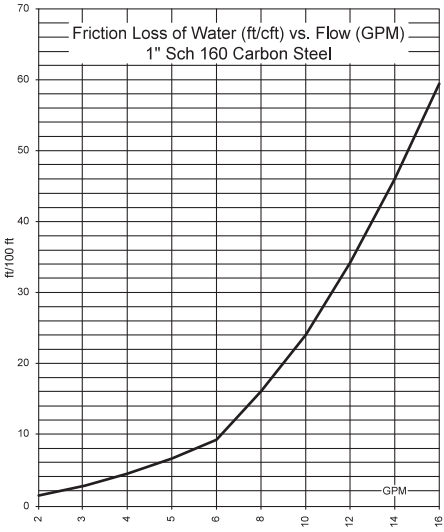

Sch 160 CS 1" diameter. Discontinuities occur at X-scale changes.

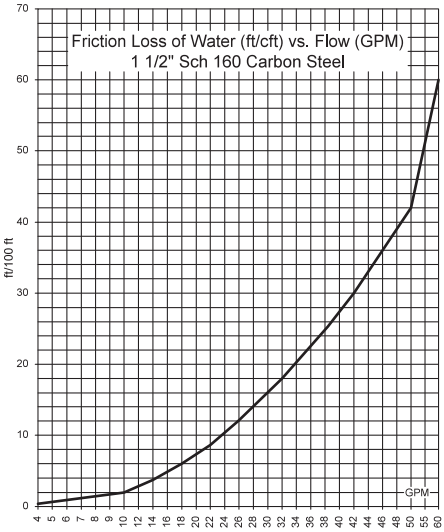

Sch 160 CS 1 ½" diameter. Discontinuities occur at X-scale changes.

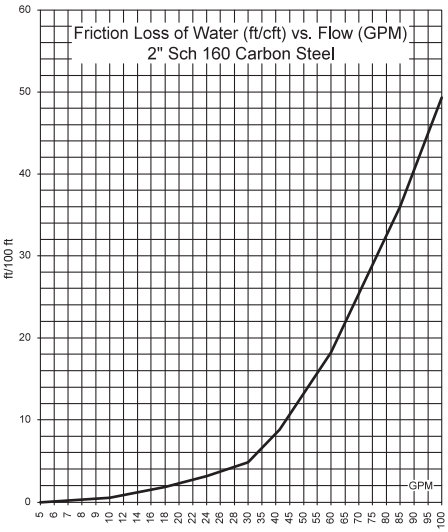

Sch 160 CS 2" diameter. Discontinuities occur at X-scale changes.

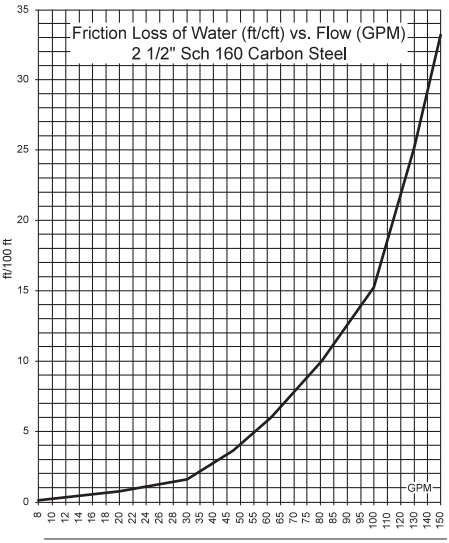

Sch 160 CS 2 ½" diameter. Discontinuities occur at X-scale changes.

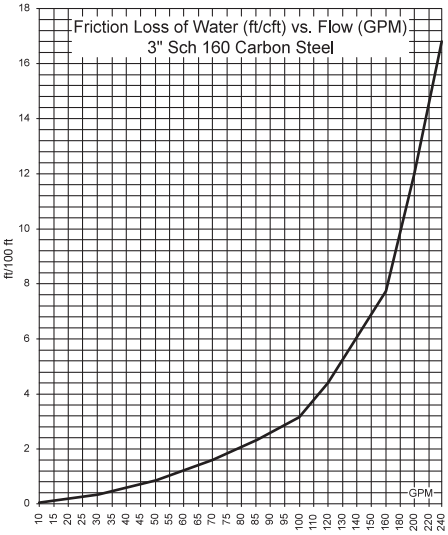

Sch 160 CS 3" diameter. Discontinuities occur at X-scale changes.

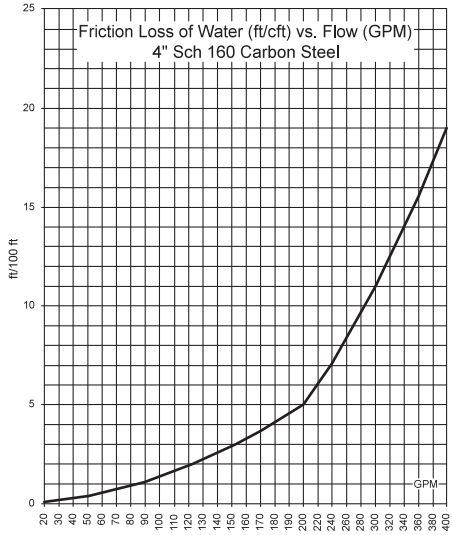

Sch 160 CS 4" diameter. Discontinuities occur at X-scale changes.

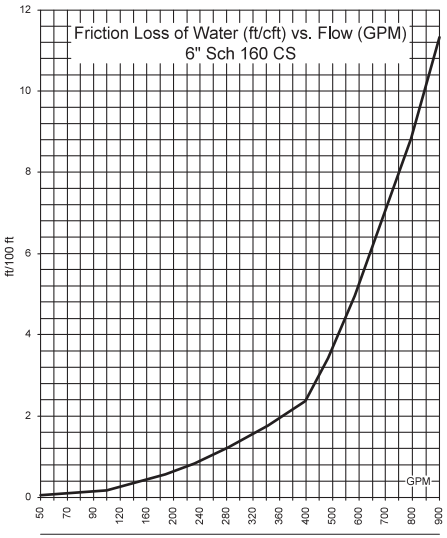

Sch 160 CS 6" diameter. Discontinuities occur at X-scale changes.

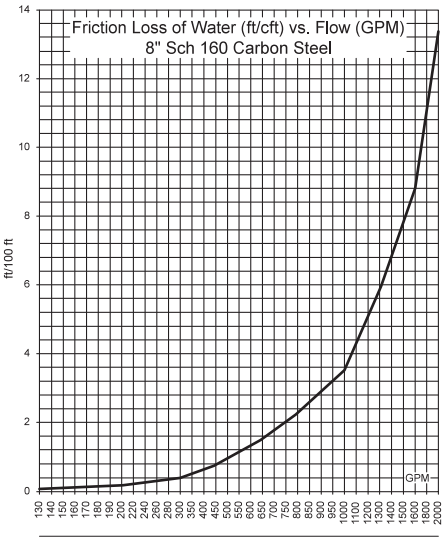

Sch 160 CS 8" diameter. Discontinuities occur at X-scale changes.

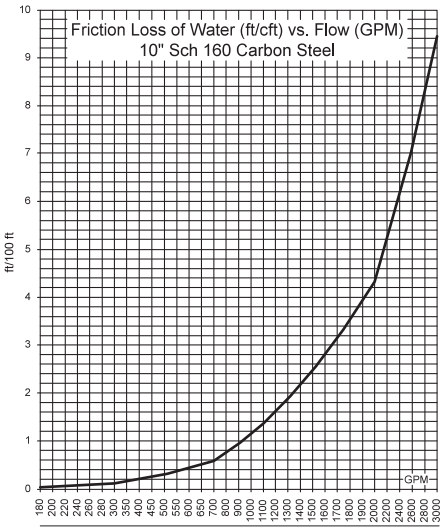

Sch 160 CS 10" diameter. Discontinuities occur at X-scale changes.

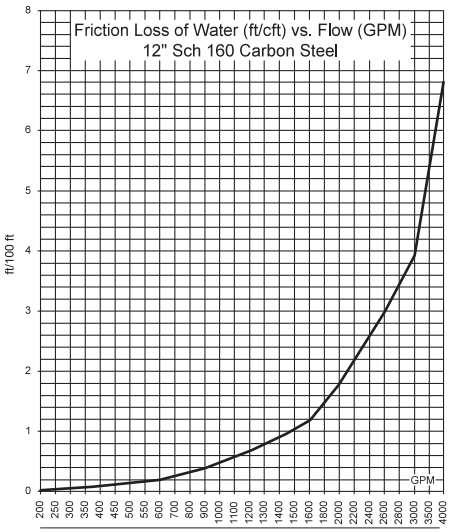

Sch 160 CS 12" diameter. Discontinuities occur at X-scale changes.

Appendix 9

Physical Constants of Hydrocarbons

NO.	COMPOUND	FORMULA	MOLECULAR WEIGHT	BOILING POINT AT 14.696 PSIA (°F)	VAPOR PRESSURE AT 100°F (PSIA)	FREEZING POINT AT 14.696 PSIA (°F)	CRITICAL CONSTANTS		SPECIFIC GRAVITY AT 14.696 PSIA	
							Critical Temperature (F)	Critical Pressure (psia)	Liquid,[3].[4] 60°F/60°F	Gas at 60°F (Air=1)[1]
1	Methane	CH_4	16.043	-258.69	(5000)[2]	-296.46[5]	-116.63	667.8	0.3[8]	0.5539
2	Ethane	C_2H_6	30.070	-127.48	(800)[2]	-297.89[5]	90.09	707.8	0.3564[7]	1.0382
3	Propane	C_3H_8	44.097	-43.67	190.	-305.84[5]	206.01	616.3	0.5077[7]	1.5225
4	n-Butane	C_4H_{10}	58.124	31.10	51.6	-217.05	305.65	550.7	0.5844[7]	2 0068
5	Isobutane	C_4H_{10}	58.124	10.90	72.2	-255.29	274.98	529.1	0.5631[7]	2.0068
6	n-Pentane	C_5H_{12}	72.151	96.92	15.570	-201.51	385.7	488.6	0.6310	2.4911
7	Isopentane	C_5H_{12}	72.151	82.12	20.44	-255.83	369.10	490.4	0.6247	2.4911
8	Neopentane	C_5H_{12}	72.151	49.10	35.9	2.17	321.13	464.0	0.5967[7]	2.4911
9	n-Hexane	C_6H_{14}	86.178	155.72	4.956	-139.58	453.7	436.9	0.6640	2.9753
10	2-Methylpentane	C_6H_{14}	86.178	140.47	6.767	-244.63	435.83	436.6	0.6579	2.9753
11	3-Methylpentane	C_6H_{14}	86.178	145.89	6.098	- - -	448.3	453.1	0.6689	2.9753
12	Neohexane	C_6H_{14}	86.178	121.52	9.856	-147.72	420.13	446.8	0.6540	2.9753
13	2,3-Dimethylbutane	C_6H_{14}	86.178	136.36	7.404	-199.38	440.29	453.5	0.6664	2.9753
14	n-Heptane	C_7H_{16}	100.205	209.17	1.620	-131.05	512.8	396.8	0.6882	3.4596
15	2-Methylhexane	C_7H_{16}	100.205	194.09	2.271	-180.89	495.00	396.5	0.6830	3.4596
16	3-Methylhexane	C_7H_{16}	100.205	197.32	2.130	- - -	503.78	408.1	0.6917	3.4596
17	3-Ethylpentane	C_7H_{16}	100.205	200.25	2.012	-181.48	513.48	419.3	0.7028	3.4596
18	2,2-Dimethylpentane	C_7H_{16}	100.205	174.54	3.492	-190.86	477.23	402.2	0.6782	3.4596
19	2,4-Dimethylpentane	C_7H_{16}	100.205	176.89	3.292	-182.63	475.95	396.9	0.6773	3.4596
20	3,3-Dimethylpentane	C_7H_{16}	100.205	186.91	2.773	-210.01	505.85	427.2	0.6976	3.4596
21	Triptane	C_7H_{16}	100.205	177.58	3.374	-12.82	496.44	428.4	0.6946	3.4596

Physical Constants of Hydrocarbons (continued)

NO.	COMPOUND	FORMULA	MOLECULAR WEIGHT	BOILING POINT AT 14.696 PSIA (°F)	VAPOR PRESSURE AT 100°F (PSIA)	FREEZING POINT AT 14.696 PSIA (°F)	CRITICAL CONSTANTS		SPECIFIC GRAVITY AT 14.696 PSIA	
							Critical Temperature (F)	Critical Pressure (psia)	Liquid,[3.] [4] 60°F/60° F	Gas at 60°F (Air=1)[1]
22	n-Octane	C_8H_{18}	114.232	258.22	0.537	-70.18	564.22	360.6	0.7068	3.9439
23	Diisobutyl	C_8H_{18}	114.232	228.39	1.101	-132.07	530.44	360.6	0.6979	3.9439
24	Isooctane	C_8H_{18}	114.232	210.63	1.708	-161.27	519.46	372.4	0.6962	3.9439
25	n-Nonane	C_9H_{20}	128.259	303.47	0.179	-64.28	610.68	332.	0.7217	4.4282
26	n-Decane	$C_{10}H_{22}$	142.286	345.48	0.0597	-21.36	652.1	304.	0.7342	4.9125
27	Cyclopentane	C_5H_{10}	70.135	120.65	9.914	-136.91	461.5	653.8	0.7504	2.4215
28	Methylcyclopentane	C_6H_{12}	84.162	161.25	4.503	-224.44	499.35	548.9	0.7536	2.9057
29	Cyclohexane	C_6H_{12}	84.162	177.29	3.264	43.77	536.7	591.	0.7834	2.9057
30	Methylcyclohexane	C_7H_{14}	98.189	213.68	1.609	-195.87	570.27	503.5	0.7740	3.3900
31	Ethylene	C_2H_4	28.054	-154.62	- - -	-272.45[5]	48.58	729.8	- - -	0.9686
32	Propene	C_3H_6	42.081	-53.90	226.4	301.45[5]	196.9	669.	0.5220[7]	1.4529
33	1-Butene	C_4H_8	56.108	20.75	63.05	301.63[5]	295.6	583.	0.6013[7]	1.9372
34	Cis-2-Butene	C_4H_8	56.108	38.69	45.54	-218.06	324.37	610.	0.6271[7]	1.9372
35	Trans-2-Butene	C_4H_8	56.108	33.58	49.80	-157.96	311.86	595.	0.6100[7]	1.9372
36	Isobutene	C_4H_8	56.108	19.59	63.40	-220.61	292.55	580.	0.6004[7]	1.9372
37	1-Pentene	C_5H_{10}	70.135	85.93	19.115	-265.39	376.93	590.	0.6457	2.4215
38	1,2-Butadiene	C_4H_6	54.092	51.53	(20.)[2]	-213.16	(339.)[2]	(653.)[2]	0.658[7]	1.8676
39	1,3-Butadiene	C_4H_6	54.092	24.06	(60.)[2]	-164.02	306.	628.	0.6272[7]	1.8676
40	Isoprene	C_5H_8	68.119	93.30	16.672	-230.74	(412.)[2]	(558.4)[2]	0.6861	2.3519

NO.	COMPOUND	FORMULA	MOLECULAR WEIGHT	BOILING POINT AT 14.696 PSIA (°F)	VAPOR PRESSURE AT 100°F (PSIA)	FREEZING POINT AT 14.696 PSIA (°F)	CRITICAL CONSTANTS		SPECIFIC GRAVITY AT 14.696 PSIA	
							Critical Temperature (F)	Critical Pressure (psia)	Liquid,[3].[4] 60°F/60°F	Gas at 60°F (Air=1)[1]
41	Acetylene	C_2H_2	26.038	-119.(6)	...	-114(5)	95.31	890.4	0.615(9)	0.8990
42	Benzene	C_6H_6	78.114	176.17	3.224	41.96	552.22	710.4	0.8844	2.6969
43	Toluene	C_7H_8	92.141	231.13	1.032	-138.94	605.55	595.9	0.8718	3.1812
44	Ethylbenzene	C_8H_{10}	106.168	277.16	0.371	-138.91	651.24	523.5	0.8718	3.6655
45	o-Xylene	C_8H_{10}	106.168	291.97	0.264	-13.30	675.0	541.4	0.8848	3.6655
46	m-Xylene	C_8H_{10}	106.168	282.41	0.326	-54.12	651.02	513.6	0.8687	3.6655
47	p-Xylene	C_8H_{10}	106.168	281.05	0.342	55.86	649.6	509.2	0.8657	3.6655
48	Styrene	C_8H_8	104.152	293.29	(0.24)<[2]>	-23.10	706.0	580.	0.9110	3.5959
49	Isopropylbenzene	C_9H_{12}	120.195	306.34	0.188	-140.82	676.4	465.4	0.8663	4.1498

1. Calculated values.
2. ( )-Estimated values.
3. Air saturated hydrocarbons.
4. Absolute values from weights in vacuum.
5. At saturation pressure (triple point).
6. Sublimation point.
7. Saturation pressure and 60° F.
8. Apparent value for methane at 60“ F.
9. Specific gravity. 119°F/60°F (sublimation point).

Appendix 10

Properties of Water

Temperature (°F)	Saturation Pressure (Pounds Per Square Inch Absolute)	Weight (Pounds Per Gallon)	Specific Gravity 60/60 °F	Conversion Factor,[1] lbs./hr. to GPM
32	.0885	8.345	1.0013	.00199
40	.1217	8.345	1.0013	.00199
50	.1781	8.340	1.0007	.00199
60	.2653	8.334	1.0000	.00199
70	.3631	8.325	.9989	.00200
80	.5069	8.314	.9976	.00200
90	.6982	8.303	.9963	.00200
100	.9492	8.289	.9946	.00201
110	1.2748	8.267	.9919	.00201
120	1.6924	8.253	.9901	.00201
130	2.2225	8.227	.9872	.00202
140	2.8886	8.207	.9848	.00203
150	3.718	8.182	.9818	.00203
160	4.741	8.156	.9786	.00204
170	5.992	8.127	.9752	.00205
180	7.510	8.098	.9717	.00205
190	9.339	8.068	.9681	.00206
200	11.526	8.039	.9646	.00207
210	14.123	8.005	.9605	.00208
212	14.696	7.996	.9594	.00208
220	17.186	7.972	.9566	.00209
240	24.969	7.901	.9480	.00210
260	35.429	7.822	.9386	.00211
280	49.203	7.746	.9294	.00215
300	67.013	7.662	.9194	.00217
350	134.63	7.432	.8918	.00224
400	247.31	7.172	.8606	.00232
450	422.6	6.892	.8270	.00241
500	680.8	6.553	.7863	.00254
550	1045.2	6.132	.7358	.00271
600	1542.9	5.664	.6796	.00294
700	3093.7	3.623	.4347	.00460

1. Multiply How in pounds per hour by the factor to get equivalent flow in gallons per minute. weight per gallon is based on 7.48 gallons per cubic foot.

Appendix 11

Flow of Water Through Schedule 40 Steel Pipe

DISCHARGE		PRESSURE DROP PER 100 FEET AND VELOCITY IN SCHEDULE 40 PIPE FOR WATER AT 60°F															
Gallons per Minute	Cubic Ft. per Second	Velocity (Feet per Sec.)	Press. Drop (PSI)	Velocity (Feet per Sec.)	Press. Drop (PSI)	Velocity (Feet per Sec.)	Press. Drop (PSI)	Velocity (Feet per Sec.)	Press. Drop (PSI)	Velocity (Feet per Sec.)	Press. Drop (PSI)	Velocity (Feet per Sec.)	Press. Drop (PSI)	Velocity (Feet per Sec.)	Press. Drop (PSI)	Velocity (Feet per Sec.)	Press. Drop (PSI)
		1/8"		1/4"													
.2	0.000446	1.13	1.86	0.616	0.359	3/8"		1/2"									
.3	0000668	1.69	4.22	0.924	0.903	0.504	0.159	0.317	0.061								
.4	0.000891	2.26	6.98	1.23	1.61	0.672	0.345	0.422	0.086	3/4"							
.5	0.00111	2.82	10.5	1.54	2.39	0.840	0.539	0.528	0.167	0.301	0.033						
.6	0.00134	3.39	14.7	1.85	3.29	1.01	0.751	0.633	0.240	0.361	0.041						
.8	0.00178	4.52	25.0	2.46	5.44	1.34	1.25	0.844	0.408	0.481	0.102	1"					
1	0.00223	5.65	37.2	3.08	8.28	1.68	1.85	1.06	0.600	0.602	0.155	0.371	0.048	1-1/4"			
2	0.00446	11.29	134.4	6.16	30.1	3.36	6.58	2.11	2.10	1.20	0.526	0.743	0.164	0.429	0.044	1-1/2"	
3	0.00668			9.25	64.1	5.04	13.9	3.17	4.33	1.81	1.09	1.114	0.336	0.644	0.090	0.473	0.043
4	0.00891			12.33	111.2	6.72	23.9	4.22	7.42	2.41	1.83	1.49	0.565	0.858	0.150	0.630	0.071
5	0.01114	2'				8.40	36.7	5.28	11.2	3.01	2.75	1.86	0.835	1.073	0.223	0.788	0.104
6	0.01337	0.574	0.044			10.08	51.9	6.33	15.8	3.61	3.84	2.23	1.17	1.29	0.309	0.946	0.145
8	0.01782	0.765	0.073	2-1/2 "		13.44	91.1	8.45	27.7	4.81	6.60	2.97	1.99	1.72	0.518	1.26	0.241
10	0.02228	0.956	0.108	0.670	0.046			10.56	42.4	6.02	999	3.71	2.99	2.15	0.774	1.58	0.361
15	003342	1.43	0.224	1.01	0.094	3"				9.03	21.6	5.57	6.36	3.22	1.63	2.37	0.755
20	0.04456	1.91	0.375	1.34	0.158	0868	0.056	3-1/2"		12.03	37.8	7.43	10.9	4.29	2.78	3.16	1.28
25	0.05570	2.39	0.561	1.68	0.234	1.09	0.083	0.812	0.041			9.28	16.7	5.37	4.22	3.94	1.93
30	0.06684	2.87	0.786	2.01	0.327	1.30	0.114	0.974	0.056	4"		11.14	23.8	6.44	5.92	4.73	2.72
35	0.07798	3.35	1.05	2.35	0.436	1.52	0.151	1.14	0.071	0.882	0.041	12.99	32.2	7.51	7.90	5.52	3.64
40	0.08912	3.83	1.35	2.68	0.556	1.74	0.192	1.30	0.095	1.01	0.052	14.85	41.5	8.59	10.24	6.30	4.65
45	0.1003	4.30	1.67	3.02	0.668	1.95	0.239	1.46	0.117	1.13	0.064			9.67	12.80	7.09	5.85
50	0.1114	4.78	2.03	3.35	0.839	2.17	0.288	1.62	0.142	1.26	0.076			10 74	1566	7.88	7.15

(continued)

Flow of Water Through Schedule 40 Steel Pipe (continued)

DISCHARGE		PRESSURE DROP PER 100 FEET AND VELOCITY IN SCHEDULE 40 PIPE FOR WATER AT 60°F															
Gallons per Minute	Cubic Ft. per Second	Velocity (Feet per Sec.)	Press. Drop (PSI)	Velocity (Feet per Sec.)	Press. Drop (PSI)	Velocity (Feet per Sec.)	Press. Drop (PSI)	Velocity (Feet per Sec.)	Press. Drop (PSI)	Velocity (Feet per Sec.)	Press. Drop (PSI)	Velocity (Feet per Sec.)	Press. Drop (PSI)	Velocity (Feet per Sec.)	Press. Drop (PSI)	Velocity (Feet per Sec.)	Press. Drop (PSI)
60	0.1337	5.74	2.87	4.02	1.18	2.60	0.46	1.95	0.204	1.51	0.107	5"		12.89	22.2	9.47	10.21
70	0.1560	6.70	3.84	4.69	1.59	3.04	0.540	2.27	0.261	1.76	0.143	1.12	0.047			11.05	13.71
80	0.1782	7.65	4.97	5.36	2.03	3.47	0.687	2.60	0.334	2.02	0.180	1.28	0.060			12.62	17.59
90	0.2005	8.60	6.20	6.03	2.53	3.91	0.861	2.92	0.416	2.27	0.224	1.44	0.074	6"		14.20	22.0
100	0.2228	9.56	7.59	6.70	3.09	4.34	1.05	3.25	0.509	2.52	0.272	1.60	0.090	1.11	0.036	15.78	26.9
125	0.2785	11.97	11.76	8.38	4.71	5.43	1.61	4.06	0.769	3.15	0.415	2.01	0.135	1.39	0.055	19.72	41.4
150	0.3342	14.36	16.70	10.05	6.69	6.51	2.24	4.87	1.08	3.78	0.580	2.41	0.190	1.67	0.077		
175	0.3899	16.75	22.3	11.73	8.97	7.60	3.00	5.68	1.44	4.41	0.774	2.81	0.253	1.94	0.102		
200	0.4456	19.14	28.8	13.42	11.68	8.68	3.87	6.49	1.85	5.04	0.985	3.21	0.323	2.22	0.130	8"	
225	0.5013	—	—	15.09	14.63	9.77	4.83	7.30	2.32	5.67	1.23	3.61	0.401	2.50	0.162	1.44	0.043
250	0.557	—	—	—	—	10.85	5.93	8.12	2.84	6.30	1.46	4.01	0.495	2.78	0.195	1.60	0.051
275	0.6127	—	—	—	—	11.94	7.14	8.93	3.40	6.93	1.79	4.41	0.583	3.05	0.234	1.76	0.061
300	0.6684	—	—	—	—	13.00	8.36	9.74	4.02	7.56	2.11	4.81	0.683	3.33	0.275	1.92	0.072
325	0.7241	—	—	—	—	14.12	9.89	10.53	4.09	8.19	2.47	5.21	0.797	3.61	0.320	2.08	0.083
350	0.7798			—	—	—	—	11.36	5.41	8.82	2.84	5.62	0.919	3.89	0.367	2.24	0.095
375	0.8355			—	—	—	—	12.17	6.18	9.45	3.25	6.02	1.05	4.16	0.416	2.40	0.108
400	0.8912			—	—	—	—	12.98	7.03	10.08	3.68	6.42	1.19	4.44	0.471	2.56	0.121
425	0.9469			—	—	—	—	13.80	7.89	10.71	4.12	6.82	1.33	4.72	0.529	2.73	0.136
450	1.003	10"		—	—	—	—	14.61	8.80	11.34	4.60	7.22	1.48	5.00	0.590	2.89	0.151
475	1.059	1.93	0.054			—	—	—	—	11.97	5.12	7.62	1.64	5.27	0.653	3.04	0.166
500	1.114	2.03	0.059			—	—	—	—	12.60	5.65	8.02	1.81	5.55	0.720	3.21	0.182
550	1.225	2.24	0.071			—	—	—	—	13.85	6.79	8.82	2.17	6.11	0.861	3.53	0.219

(continued)

Flow of Water Through Schedule 40 Steel Pipe (continued)

DISCHARGE		PRESSURE DROP PER 100 FEET AND VELOCITY IN SCHEDULE 40 PIPE FOR WATER AT 60°F															
Gallons per Minute	Cubic Ft. per Second	Velocity (Feet per Sec.)	Press. Drop (PSI)	Velocity (Feet per Sec.)	Press. Drop (PSI)	Velocity (Feet per Sec.)	Press. Drop (PSI)	Velocity (Feet per Sec.)	Press. Drop (PSI)	Velocity (Feet per Sec.)	Press. Drop (PSI)	Velocity (Feet per Sec.)	Press. Drop (PSI)	Velocity (Feet per Sec.)	Press. Drop (PSI)	Velocity (Feet per Sec.)	Press. Drop (PSI)
600	1.337	2.44	0.083			—	—	—	—	15.12	8.04	9.63	2.55	6.66	1.02	3.85	0258
650	1.448	2.64	0.097			—	—	—	—	—	—	10.43	2.98	7.22	1.18	4.17	0.301
		10"										5"		6"		8"	
700	1.560	2.85	0.112	2.01	0.047			—	—	—	—	11.23	3.43	7.78	1.35	4.49	0 343
750	1.671	3.05	0.127	2.15	0.054			—	—	—	—	12.03	3.92	8.33	1.55	4.81	0.392
800	1.782	3.25	0.143	2.29	0.061	14"		—	—	—	—	12.83	4.43	8.88	1.75	5.13	0.443
850	1.894	3.46	0.160	2.44	0.068	2.02	0.042	—	—	—	—	13.64	5.00	9.44	1.96	5.45	0.497
900	2.005	3.66	0.179	2.58	0.075	2.13	0.047	—	—	—	—	14.44	5.58	999	2.18	5.77	0.554
950	2.117	3.86	0.198	2.72	0.083	2.25	0.052			—	—	15.24	6.21	10.55	2.42	6.09	0.613
1000	2.228	4.07	0.218	2.87	0.091	2.37	0.057			—	—	16.04	6.84	11.10	2.68	6.41	0.675
1100	2.451	4.48	0.260	3.15	0.110	2.61	0.068	16"		—	—	17.65	8.23	12.22	3.22	7.05	0.807
1200	2.674	4.88	0.306	3.44	0.128	2.85	0.080	2.18	0.042	—	—	—	—	13.33	3.81	7.70	.948
1300	2.896	5.29	0.355	3.73	0.150	3.08	0.093	2.36	0.048	—	—	—	—	14.43	4.45	8.33	1.11
1400	3.119	5.70	0.409	4.01	0.171	3.32	0.107	2.54	0.055					15.55	5.13	8.98	1.28
1500	3.342	6.10	0466	4.30	0.195	3.56	0.122	2.72	0.063					16.66	5.85	9.62	1.46
1600	3.565	6.51	0.527	4.59	0.219	3.79	0.138	2.90	0.071	18"				17.77	6.61	10.26	1.65
1800	4.010	7.32	0.663	5.16	0.276	4.27	0.172	3.27	0.088	2.58	0.050			19.99	8.37	11.54	2.08
2000	4.456	8.14	0.808	5.73	0.339	4.74	0.209	3.63	0.107	2.87	0.060			22.21	10.3	12.82	2.55
2500	5.570	10.17	1.24	7.17	0.515	5.93	0.321	4.54	0.163	3.59	0.091	20"				16.03	3.94
3000	6.684	12.20	1.76	8.60	0.731	7.11	0.451	5.45	0.232	4.30	0.129	3.46	0.075			19.24	5.59
3500	7.798	14.24	2.38	10.03	0.982	8.30	0.607	6.35	0.312	5.02	0.173	4.04	0.101	24"		22.44	7.56
4000	8.912	16.27	3.08	11.47	1.27	9.48	0.787	7.26	0.401	5.74	0.222	4.62	0.129	3.19	0.052	25.65	9.80
4500	10.03	18.31	3.87	12.90	1.60	10.67	0.990	8.17	0.503	646	0.280	5.20	0.162	3.59	0 065	2887	12 2
5000	11.14	20 35	4 71	14 33	195	11 R5	1 21	W 08	0617	7 17	0 340	5 77	0 1W	1 00	0 070	---	---

Flow of Water Through Schedule 40 Steel Pipe (continued)

DISCHARGE		PRESSURE DROP PER 100 FEET AND VELOCITY IN SCHEDULE 40 PIPE FOR WATER AT 60°F															
Gallons per Minute	Cubic Ft. per Second	Velocity (Feet per Sec.)	Press. Drop (PSI)	Velocity (Feet per Sec.)	Press. Drop (PSI)	Velocity (Feet per Sec.)	Press. Drop (PSI)	Velocity (Feet per Sec.)	Press. Drop (PSI)	Velocity (Feet per Sec.)	Press. Drop (PSI)	Velocity (Feet per Sec.)	Press. Drop (PSI)	Velocity (Feet per Sec.)	Press. Drop (PSI)	Velocity (Feet per Sec.)	Press. Drop (PSI)
6000	13.37	24.41	6.74	17.20	2.77	14.23	1.71	10.89	0.877	8.61	0.483	6.93	0.280	4.79	0.111	—	—
7000	15.60	28.49	9.11	20.07	3.74	16.60	2.31	12.71	1.18	10.04	0.652	8.08	0.376	5.59	0.150	—	—
8000	17.82	—	—	22.93	4.84	18.96	2.99	14.52	1.51	11.47	0.839	9.23	0.488	6.38	0.192	—	—
9000	20 05	—	—	25.79	6.09	21.34	3.76	16.34	1.90	12.91	1.05	10.39	0.608	7.18	0.242	—	—
10.000	22 28	—	—	28.66	7.46	23.71	4.61	18.15	2.34	14.34	1.28	11.54	0.739	7.98	0294	—	—
12.000	26.74	—	—	34.40	10.7	2845	6.59	21 79	3.33	17.21	1.83	13.85	1.06	9.58	0.416	—	---
14,000	31.19	—	—	—	—	33.19	8.89	25 42	4 49	20.08	2.45	16.16	1.43	11.17	0.562	—	—
16.000	35.65							29.05	583	22.95	3.18	18.47	1.85	12.77	0.723	—	—
18.000	40.10							32 68	7.31	25.82	4.03	20.77	2.32	14.36	0.907	—	—
20.000	44.56	—	—	—	—	—	—	36.31	9.03	28.69	4.93	23.08	2.86	15.96	1.12	—	—

For pipe lengths other than 100 feet, the pressure drop is proportional to the length. Thus, for 50 feet of pipe, the pressure drop is approximately one-half the value given in the table-for 300 feet, three times the given value, etc.
Velocity is a function of the cross sectional flow area; thus it is constant for a given flow rate and is independent of pipe length

Flow of Air Through Schedule 40 Steel Pipe

FREE AIR q'^m	COMPRESSED AIR	PRESSURE DROP OF AIR IN POUNDS PER SQUARE INCH PER 100 FEET OF SCHEDULE 40 PIPE FOR AIR AT 100 POUNDS PER SQUARE INCH GAUGE PRESSURE AND 60°F TEMPERATURE								
Cubic Feet Per Minute at 60°F and 14.7 psia	Cubic Feet Per Minute at 60°F and 100 psig									
		1/8"	1/4"	3/8"						
1	0.128	0.361	0.083	0.018	1/2"					
2	0.256	1.31	0.285	0.064	0.020					
3	0.384	3.06	0.605	0.133	0.042					
4	0.513	4.83	1.04	0.226	0.071	3/4"				
5	0.641	7.45	1.58	0.343	0.106	0.027				
6	0.769	10.6	2.23	0.408	0.148	0.037	1"			
8	1.025	186	389	0.848	0.255	0.062	0.019			
10	1.282	28.7	5.96	1.26	0.356	0.094	0029			
15	1.922	—	13.0	2.73	0.834	0.201	0.062	1-1/4"		
20	2.563	—	22.8	4.76	1.43	0.345	0.102	0.026	1-1/2"	
25	3.204	—	35.6	7.34	2.21	0.526	0.156	0.039	0.019	
30	3.845	—	—	10.5	3.15	0.748	0.219	0.055	0.026	
35	4.486	—	—	14.2	4.24	1.00	0293	0.073	0.035	
40	5.126	—	—	18.4	5.49	1.30	0.379	0.095	0.044	
45	5.767	—	—	23.1	6.90	1.62	0.474	0.116	0.055	2"
50	6.408			28.5	8.49	1.99	0.578	0.149	0.067	0.019
60	7.690			40.7	12.2	2.85	0.819	0.200	0.094	0.027
70	8.971	2-1/2"		—	16.5	3.83	1.10	0.270	0.126	0.036
80	10.25	0.019		—	21.4	4.96	1.43	0.35	0.162	0.046

(continued)

Flow of Air Through Schedule 40 Steel Pipe (continued)

FREE AIR q'^m	COMPRESSED AIR	PRESSURE DROP OF AIR IN POUNDS PER SQUARE INCH PER 100 FEET OF SCHEDULE 40 PIPE FOR AIR AT 100 POUNDS PER SQUARE INCH GAUGE PRESSURE AND 60°F TEMPERATURE								
Cubic Feet Per Minute at 60°F and 14.7 psia	Cubic Feet Per Minute at 60°F and 100 psig									
90	11.53	0.023		—	27.0	6.25	1.80	0.437	0.203	0.058
100	12.82	0.029			33.2	7.69	2.21	0.534	0.247	0.070
125	16.02	0.044	3”		—	11.9	3.39	0.825	0.380	0.107
150	19.22	0.062	0.021		—	17.0	4.87	1.17	0.537	0.151
175	22.43	0.083	0.028		—	23.1	6.60	1.58	0.727	0.205
200	25.63	0.107	0.036	3-1/2"	—	30.0	8.54	2.05	0.937	0.264
225	28.84	0.134	0.045	0.022		37.9	10.8	2.59	1.19	0.331
250	32.04	0.164	0.055	0.027		—	13.3	3.18	1.45	0.404
275	35.24	0.191	0.066	0.032		—	16.0	3.83	1.75	0.484
300	38.45	0.232	0.078	0.037		—	19.0	4.56	2.07	0.573
325	41.65	0.270	0.090	0.043		—	22.3	5.32	2.42	0.673
350	44.87	0.313	0.104	0.050	4"	—	25.8	6.17	2.80	0.776
375	48.06	0.356	0.119	0.057	0.030	—	29.6	7.05	3.20	0.887
400	51.26	0.402	0.134	0.064	0.034	—	33.6	8.02	3.64	1.00
425	54.47	0.452	0.151	0.072	0.038	—	37.9	9.01	4.09	1.13
450	57.67	0.507	0.168	0.081	0.042	—	—	10.2	4.59	1.26
475	60.88	0.562	0.187	0.089	0.047		—	11.3	5.09	1.40
500	64.08	0.623	0.206	0.099	0.052		—	12.5	5.61	1.55
550	70.49	0.749	0.248	0.118	0.062		—	15.1	6.79	1.87
600	76.90	0.887	0.293	0.139	0.073		—	18.0	8.04	2.21
650	83.30	1.04	0.342	0.163	0.086	5”	—	21.1	9.43	2.60
700	89.71	1.19	0.395	0.188	0.099	0.032		24.3	10.9	3.00

(continued)

Flow of Air Through Schedule 40 Steel Pipe (continued)

FREE AIR q'^m Cubic Feet Per Minute at 60°F and 14.7 psia	COMPRESSED AIR Cubic Feet Per Minute at 60°F and 100 psig	PRESSURE DROP OF AIR IN POUNDS PER SQUARE INCH PER 100 FEET OF SCHEDULE 40 PIPE FOR AIR AT 100 POUNDS PER SQUARE INCH GAUGE PRESSURE AND 60°F TEMPERATURE								
750	96.12	1.36	0.451	0.214	0.113	0.036		27.9	12.6	3.44
800	102.5	1.55	0.513	0.244	0.127	0.041		31.8	14.2	3.90
850	108.9	1.74	0.576	0.274	0.144	0.046		35.9	16.0	4.40
900	115.3	1.95	0.642	0.305	0.160	0.051	6"	40.2	18.0	4.91
950	121.8	2.18	0.715	0.340	0.178	0.057	0.023	---	20.0	5.47
1,000	128.2	2.40	0.788	0.375	0.197	0.063	0.025	---	22.1	6.06
1100	141.0	2.89	0.948	0.451	0.236	0.075	0.030	---	26.7	7.29
1,200	153.8	3.44	1.13	0.533	0.279	0.089	0.035	---	31.8	8.63
1,300	166.6	4.01	1.32	0.626	0.327	0.103	0.041	---	37.3	10.1
1,400	179.4	4.65	1.52	0.718	0.377	0.119	0.047			11.8
1,500	192.2	5.31	1.74	0.824	0.431	0.136	0.054			13.5
1,600	205.1	6.04	1.97	0.932	0.490	0.154	0.061			15.3
1,800	230.7	7.65	2.50	1.18	0.616	0.193	0.075	8"		19.3
2,000	256.3	9.44	3.06	1.45	0.757	0.237	0.094	0.023		23.9
2,500	320.4	14.7	4.76	2.25	1.17	0.366	0.143	0.035	10"	37.3
3,000	384.5	21.1	6.82	3.20	1.67	0.524	0.204	0.051	0.016	
3,500	448.6	28.8	9.23	4.33	2.26	0.709	0.276	0.068	0.022	
4,000	512.6	37.6	12.1	5.66	2.94	0.919	0.358	0.088	0.028	
4,500	576.7	47.6	15.3	7.16	3.69	1.16	0.450	0.111	0.035	12"
5000	640.8	---	18.8	8.85	4.56	1.42	0.552	0.136	0.043	0.018
6,000	769.0	---	27.1	12.7	6.57	2.03	0.794	0.195	0.061	0.025
7,000	897.1	---	36.9	17.2	8.94	2.76	1.07	0.262	0.082	0.034

(continued)

Flow of Air Through Schedule 40 Steel Pipe (continued)

FREE AIR q'^m	COMPRESSED AIR	PRESSURE DROP OF AIR IN POUNDS PER SQUARE INCH PER 100 FEET OF SCHEDULE 40 PIPE FOR AIR AT 100 POUNDS PER SQUARE INCH GAUGE PRESSURE AND 60°F TEMPERATURE								
Cubic Feet Per Minute at 60°F and 14.7 psia	Cubic Feet Per Minute at 60°F and 100 psig									
8000	1025	---	---	22.5	11.7	3.59	1.39	0.339	0.107	0.044
9,000	1153	---	---	28.5	14.9	4.54	1.76	0.427	0.134	0.055
10000	1282	---	---	35.2	18.4	5.60	2.16	0.526	0.164	0.067
11000	1410	---	---	---	22.2	6.78	2.62	0.633	0.197	0.081
12000	1538	---	---	---	26.4	8.07	3.09	0.753	0.234	0.096
13000	1666	---	---	---	31.0	9.47	3.63	0.884	0 273	0.112
14000	1794	---	---	---	36.0	11.0	4.21	1.02	0.316	0.129
15000	1922	---	---	---	---	12.6	4.84	1.17	0364	0.148
16000	2051	---	---	---	---	14.3	5.50	1.33	0.411	0.167
18,000	2307	---	---	---	---	18.2	6.96	1.68	0.520	0.213
20000	2563	---	---	---	---	22.4	8.60	2.01	0.642	0.260
22,000	2820	---	---	---	---	27.1	10.4	2.50	0.771	0.314
24000	3076	---	---	---	---	32.3	12.4	2.97	0.918	0.371
26000	3332	---	---	---	---	37.9	14.5	3.49	1.12	0.435
28000	3588	---	---	---	---	---	16.9	4.04	1.25	0.505
30000	3845	---	---	---	---	---	19.3	4.64	1.42	0.520

Appendix 13

Pressure-Temperature Ratings for Flanges, Flanged Fittings and Flanged and Buttwelding End Valves

Pipe Flanges and Flanged Fittings ANSI Standard B16.5
Flanged and Buttwelding End Valves ANSI Standard B 16.34

Applicable ASTM Material Specifications

Mat'l. Group No.	ASTM Spec.	Notes	Mat'l. Type	Product Form
1.1	A105	(1)(3)(8)	Carbon	Forgings
	A350-LF2	(4)		
	A216-WCB	(1)(8)		Castings
	A515-70	(1)(8)(19)		Plates
Ratings	A516-70	(1)(7)(19)		
On	A675-70	(1)(16)(17)(20)		Bars & Shapes
Appendix 13-3	A696 Gr.C	(1)(20)		
	A672-B70	(5)(20)		Tubular
	A672-C70	(5)(20)		
	A537-C1.1	(4)(19)	C-Mn-Si	Plates
1.2	A216-WCC	(1)(8)	Carbon	Castings
	A352-LCC	(5)		
	A106-C	(6)(20)		Tubular
Ratings	A352-LC2	(4)	2 1/2 Ni	Castings
On	A203-B	(1)(8)(19)		Plates
Appendix 13-4	A350-LF3	(4)	3 1/2 Ni	Forgings
	A352-LC3	(4)		Castings
	A203-E	(1)(8)(19)		Plates
1.3	A352-LCB	(4)	Carbon	Castings
	A515-65	(1)(8)(19)		Plates
	A516-65	(1)(7)(19)		
Ratings	A675-65	(1)(16)(17)(20)		Bars & Shapes
on	A672-B65	(5)(20)		Tubular
Appendix 13-5	A672-C65	(5)(20)		
	A203-A	(1)(8)(19)	2 1/2 Ni	Plates
	A203-D	(1)(8)(19)	3 1/2 Ni	
1.4	A350-LF1	(4)	Carbon	Forgings
	A515-60	(1)(8)(19)		Plates
	A516-60	(1)(7)(19)		
Ratings	A675-60	(1)(7)(16)(20)		Bars & Shapes
On	A696-Gr.B	(1)(20)		
Appendix 13-6	A106-B	(1)(20)		Tubular
	A672-B60	(5)(20)		
	A672-C60	(5)(20)		
1.5	A182-F1	(2)(8)	C-1/2 Mo	Forgings
	A217-WC1	(2)(8)(11)		Castings
Ratings	A352-LC1	(4)		
on	A204-A	(2)(8)(19)		Plates
Appendix 13-7	A204-B	(2)(8)(19)		
	A691-CM70	(5)(20)		Tubular
1.6	A335-P1	(2)(8)(21)	C-1/2 Mo	Tubular
	A369-FP1	(2)(8)(21)		
Ratings	A387-2 C1.1	(8)(21)	1/2 Cr-1/2 Mo	Plates
On	A387-2 C1.2	(8)(21)		
Appendix 13-8	A691-1/2 CR	(8)(21)		Tubular
	A387-12 C1.1	(12)(21)	1 Cr-1/2 Mo	Plates
1.7	A204-C	(7)(19)	C-1/2 Mo	Plates
	A691-CM75	(5)(20)		Tubular
Ratings	A182-F2	(8)	1/2 Cr-1/2 Mo	Forgings
On	A217-WC4	(8)(11)	Ni-Cr-1/2 Mo	Castings
Appendix 13-9	A217-WC5	(9)(11)	Ni-Cr-1 Mo	
1.8	A387-12C1.2	(12)(21)	1 Cr-1/2 Mo	Plates
	A691-1 Cr	(11)(12)(21)		Tubular
	A335-P12	(12)(21)		
	A369-FPI2	(12)(21)		
	A387-11 C1.1	(12)(21)	1 1/4 Cr-1/2 Mo	Plates
Ratings	A691-1 1/4 Cr	(12)(21)		Tubular
On	A335-P11	(12)(21)		
Appendix 13-10	A369-FP11	(12)(21)		
	A387-22C1.1	(12)(21)	2 1/4 Cr- 1 Mo	
	A691-2 1/4 Cr	(12)(21)		
	A335-P22	(12)(21)		
	A369-FP22	(12)(21)		
1.9	A182-F12	(11)(12)	1 Cr-1/2 Mo	Forgings
	Al82-F11	(11)(12)	1 1/4 Cr-1/2 Mo	
Ratings	A217-WC6	(10)(11)		Castings
On	A387-11C1.2	(12)(19)		
Appendix 13-11	A739-B11	(12)(20)		Bars & Shapes

for balance of material groups, see appendix 13-2

Mat'l. Group No.	ASTM Spec.	Notes	Mat'l. Type	Product Form
1.10	Al82-F22	(12)	2 1/4 Cr-1 Mo	Forgings
Ratings	A217-WC9	(10)(11)		Castings
on	A387-22C1.2	(12)(19)		Plates
Appendix 13-12	A739-B22	(12)(20)		Bars 5 Shapes
1.11	A182-F21	(12)(21)	3 Cr-1 Mo	Forgings
	A387-21 C1.2	(12)(21)		Plates
Ratings	A302-A&B	(8)(18)(21)	Mn-1/2 Mo	
on	A302-C&D	(8)(18)(21)		
Appendix 13-13	A537 C1.2	(4)(21)	Mn-Si	
1.12	A387-5C1.1	(21)	5 Cr-1/2 Mo	Plates
	A387-5C1.2	(21)		
Ratings	A691-5CR	(21)		Tubular
on	A335-P5	(21)		
Appendix 13-14	A335-P5b	(21)		
	A369-FP5	(21)		
1.13	Al82-F5a		5 Cr-1/2 Mo	Forgings
Ratings	Al82-F5			
on	A2I7-C5	(11)		Castings
Appendix 13-15				
1.14	A182-F9		9 Cr-1 Mo	Forgings
Ratings	A217-C12	(11)		Castings
on				
Appendix 13-16				
2.1	A182-F304	(13)	18 Cr-8 Ni	Forgings
	A 182-F304H			
	A351-CF3	(6)		Castings
	A351-CF8	(13)(16)		
	A240-304	(13)(14)(19)		Plates
	A240-304H	(19)		
Ratings	A479-304	(13)(14)(20)		Bars & Shapes
On	A479-304H	(20)		
Appendix 13-17	A312-TP304	(13)(20)		Tubular
	A312-TP304H	(20)		
	A358-304	(13)(20)		
	A376-TP304	(13)(20)		
	A376-TP304H	(20)		
	A430-FP304	(13)(20)		
	A430-FP304H	(20)		
2.2	A182-F316	(13)	16 Cr-12 Ni-2 Mo	Forgings
	A182-F316H			
	A240-316	(13)(14)(19)		Plates
	A240-316H	(19)		
	A479-316	(13)(14)(20)		Bars & Shapes
	A479-316H	(20)		
	A312-TP316	(13)(20)		Tubular
	A3I2-TP316H	(20)		
Ratings	A358-316	(13)(20)		
on	A376-TP316	(13)(20)		
Appendix 13-18	A376-TP316H	(20)		
	A430-FP316	(13)(14)(20)		
	A430-FP316H	(20)		
	A351-CF3A	(4)(21)	18 Cr-8 Ni	Castings
	A351-CF8A	(4)(21)		
	A240-317	(13)(14)(19)	18 Cr-13 Ni-3 Mo	Plates
	A312-TP317	(13)(20)		Tubular
	A351-CF3M	(7)	18 Cr-9 Ni-2 Mo	Castings
	A351-CF8M	(13)		
2.3	Al82-F304L	(6)	18 Cr-8 Ni	Forgings
	A240-304L	(6)(19)		Plates
	A479-304L	(6)(20)		Bars & Shapes
Ratings	A312-TP304L	(6)(20)		Tubular
on	Al82-F316L	(7)	16 Cr-12 Ni-2 Mo	Forgings
Appendix 13-19	A240-316L	(7)(19)		Plates
	A479-316L	(20)		Bars & Shapes
	A312-TP316L	(20)		Tubular

for balance of material groups, see appendix 13-2

Pressure-Temperature Ratings for Flanges, Flanged Fittings and Flanged and Buttwelding End Valves

Pipe Flanges and Flanged Fittings ANSI Standard B16.5
Flanged and Buttwelding End Valves ANSI Standard B 16.34

Applicable ASTM Material Specifications

Mat'l. Group No.	ASTM Spec.	Notes	Mat'l. Type	Product Form
2.4	A182-F321	(8)	18 Cr-10 Ni-Ti	Forgings
	A182-F321H			
	A240-321	(8)(19)		Plates
	A240-321H	(19)		
	A479-321	(8)(20)		Bars & Shapes
Ratings	A479-321H	(20)		
On	A312-P321	(8)(20)		Tubular
Appendix 13-20	A312- P321H	(20)		
	A358-321	(8)(20)		
	A376-TP321	(8)(20)		
	A376-TP321H	(20)		
	A430-FP321	(8)(20)		
	A430-FP321H	(20)		
2.5	A182-F347	(8)	18 Cr-10 Ni-Cb	Forgings
	A182-F347H			
	A182-F348	(8)		
	A182-F348H			
	A351-CF8c	(13)		Castings
Ratings	A240-347	(8)(19)		Plates
On	A240-347H	(19)		
Appendix 13-21	A240-348	(8)(19)		
	A240-348H	(19)		
	A479-347	(8)(20)		Bars & Shapes
	A479-347H	(20		
	A479-348	(8)(20)		
2.5	A479-348H	(20)	18 Cr-10 Ni-Cb	Bars & Shapes
Con't	A312-TP347	(8)(20)		Tubular
	A312-TP347H	(20)		
	A358-347	(8)(20)		
	A376-TP347	(8)(20)		
	A376-TP347H	(20)		
	A430-FP347	(8)(20)		
	A430-FP347H	(20)		
	A312-TP348	(8)(20)		
	A312-TP348H	(20)		
	A376-TP348	(8)(20)		
	A376-TP348H	(20)		
2.6	A351-CH8	(13)	23 Cr-20 Ni	Castings
	A351-CH20	(13)		
Ratings	A240-309S	(13)(14)(19)	23 Cr-20 Ni	Plates
on	A312-TP309	(13)(20)		Tubular
Appendix 13-22	A358-309	(20)		
2.7	A182-F310	(13)(15)	25 Cr-20 Ni	Forgings
	A351-CK20	(13)		Castings
Ratings	A240-310S	(13)(14)(15)(19)		Plates
On	A479-310S	(13)(14)(20)		Bars & Shapes
Appendix 13-23	A312-TP310	(13)(15)(20)		Tubular
	A358-310	(13)(15)(20)		

NOTES APPLICABLE TO MATERIAL GROUPS

1. Permissible but not recommended for prolonged use above 800°F since the carbide phase of carbon steel may be converted to graphite.
2. Permissible but not recommended for prolonged use above 850°F since the carbide phase of carbon-molybdenum steel may be converted to graphite
3. Only killed steel shall be used above 850°F.
4. Not to be used over 650°F.
5. Not to be used over 700°F.
6. Not to be used over 800°F.
7. Not to be used over 850°F.
8. Not to be used over 1000°F.
9. Not to be used over 1050°F.
10. Not to be used over 1100°F.
11. Use normalized and tempered material only.
12. Permissible but not recommended for prolonged use above 1100°F.
13. At temperatures over 1000°F. use only when the carbon content is 0.04 percent or higher.
14. For temperatures above 1000°F, use only if the material is heat treated by heating it to a minimum temperature of 1900°F and quenching in water or rapidly cooled by other means.
15. For service temperatures of 1050°F and above. assurance must be provided that grain size is not finer than ASTM No. 6.
16. leaded grades shall not be used where welded or in any application above 500°F.
17. For service temperatures above 850°F. it is recommended that killed steel containing not less thon 0.10% residual silicon be used.
18. Permissible but not recommended for prolonged use above 850°F.
19. Plate materials are listed only for use as blind flanges.
20. This product form is not applicable to ANSI B16.5.
21. This material group is intended only for use in valves to ANSI B 16.34.

Pressure-Temperature Ratings for Flanges, Flanged Fittings and Flanged and Buttwelding End Valves

Pipe Flanges and Flanged Fittings ANSI Standard B16.5
Flanged and Buttwelding End Valves ANSI Standard B16.34

Ratings for Materials Group 1.1: A105, A216 WCB, A350-LF2, A515-70, A516-70, A537-C1.1, A672-B70, A672-C70, A675-70, A696 Gr.C (1)

Pipe Flanges and Flanged Fittings
Standard Class Valves—Flanged and Buttwelding End

Temperature, °F	Working Pressure by Classes, psig (2)							
	150	300	400	600	900	1500	2500	4500 (3)
–20 to 100	285	740	990	1480	2220	3705	6170	11110
200	260	675	900	1350	2025	3375	5625	10120
300	230	655	875	1315	1970	3280	5470	9845
400	200	635	845	1270	1900	3170	5280	9505
500	170	600	800	1200	1795	2995	4990	8980
600	140	550	730	1095	1640	2735	4560	8210
650	125	535	715	1075	1610	2685	4475	8055
700	110	535	710	1065	1600	2665	4440	7990
750	95	505	670	1010	1510	2520	4200	7560
800	80	410	550	825	1235	2060	3430	6170
850	65	270	355	535	805	1340	2230	4010
900	50	170	230	345	515	860	1430	2570
950	35	105	140	205	310	515	860	1545
1000	20	50	70	105	155	260	430	770

Special Class Buttwelding End Valves Only

Temperature. °F	Working Pressure by Classes, psig (2)							
	150	300	400	600	900	1500	2500	4500
–20 to 100	290	750	1000	1500	2250	3750	6250	11250
200	290	750	1000	1500	2250	3750	6250	11250
300	290	750	1000	1500	2250	3750	6250	11250
400	290	750	1000	1500	2250	3750	6250	11250
500	290	750	1000	1500	2250	3750	6250	11250
600	275	715	950	1425	2140	3565	5940	10690
650	270	700	935	1400	2100	3495	5825	10485
700	265	695	925	1390	2080	3470	5780	10405
750	240	630	840	1260	1890	3150	5250	9450
800	200	515	685	1030	1545	2570	4285	7715
850	130	335	445	670	1005	1670	2785	5015
900	85	215	285	430	645	1070	1785	3215
950	50	130	170	260	385	645	1070	1930
1000	25	65	85	130	195	320	535	965

The above ratings are all subject to the stipulations made on page appendix 13-1 and the following:

(1) For notes applicable to material groups, see page appendix 13-2
(2) Ratings are maximum allowable non-shock working pressures at the temperature shown for the applicable material. For intermediate temperatures linear interpolation is permitted.
(3) Applies only to buttwelding end valves manufactured to ANSI B16.34.

Pressure-Temperature Ratings for Flanges, Flanged Fittings and Flanged and Buttwelding End Valves

Pipe Flanges and Flanged Fittings ANSI Standard B16.5
Flanged and Buttwelding End Valves ANSI Standard B16.34

Ratings for Materials Group 1.2: A106-C, A203-B, A203-E, A216-WCC, A350-LF3, A352-LC2, A352-LC3, A352-LCC (1)

Pipe Flanges and Flanged Fittings
Standard Class Valves—Flanged and Buttwelding End

Temperature, °F	Working Pressure by Classes, psig (2)							
	150	300	400	600	900	1500	2500	4500 (3)
–20 to 100	290	750	1000	1500	2250	3750	6250	11250
200	260	750	1000	1500	2250	3750	6250	11250
300	230	730	970	1455	2185	3640	6070	10925
400	200	705	940	1410	2115	3530	5880	10585
500	170	665	885	1330	1995	3325	5540	9965
600	140	605	805	1210	1815	3025	5040	9070
650	125	590	785	1175	1765	2940	4905	8825
700	no	570	755	1135	1705	2840	4730	8515
750	95	505	670	1010	1510	2520	4200	7560
800	80	410	550	825	1235	2060	3430	6170
850	65	270	355	535	805	1340	2230	4010
900	50	170	230	345	515	860	1430	2570
950	35	105	140	205	310	515	860	1545
1000	20	50	70	105	155	260	430	770

Special Class Buttwelding End Valves Only

Temperature. °F	Working Pressure by Classes, psig (2)							
	150	300	400	600	900	1500	2500	4500
–20 to 100	290	750	1000	1500	2250	3750	6250	11250
200	290	750	1000	1500	2250	3750	6250	11250
300	290	750	1000	1500	2250	3750	6250	11250
400	290	750	1000	1500	2250	3750	6250	11250
500	290	750	1000	1500	2250	3750	6250	11250
600	290	750	1000	1500	2250	3750	6250	11250
650	290	750	1000	1500	2250	3750	6250	11250
700	275	710	950	1425	2135	3560	5930	10670
750	240	630	840	1260	1890	3150	5250	9450
800	200	515	685	1030	1545	2570	4285	7715
850	130	335	445	670	1005	1670	2785	5015
900	85	215	285	430	645	1070	1785	3215
950	50	130	170	260	385	645	1070	1930
1000	25	65	85	130	195	320	535	965

The above ratings are all subject to the stipulations made on page appendix 13-1 and the following:

(1) For notes applicable to material groups, see page appendix 13-2
(2) Ratings are maximum allowable non-shock working pressures at the temperature shown for the applicable material. For intermediate temperatures linear interpolation is permitted.
(3) Applies only to buttwelding end valves manufactured to ANSI B16.34.

Pressure-Temperature Ratings for Flanges, Flanged Fittings and Flanged and Buttwelding End Valves

Pipe Flanges and Flanged Fittings ANSI Standard B16.5
Flanged and Buttwelding End Valves ANSI Standard B16.34

Ratings for Materials Group 1.3; A203-A, A203-D, A352-LCB, A515-65, A516-65, A672-B65, A672-C65, A675-65 (1)

Pipe Flanges and Flanged Fittings
Standard Class Valves—Flanged and Buttwelding End

Temperature, °F	Working Pressure by Classes, psig (2)							
	150	300	400	600	900	1500	2500	4500 (3)
−20 to 100	265	695	925	1390	2085	3470	5785	10415
200	250	655	875	1315	1970	3280	5470	9845
300	230	640	850	1275	1915	3190	5315	9565
400	200	620	825	1235	1850	3085	5145	9260
500	170	585	775	1165	1745	2910	4850	8735
500	140	535	710	1065	1600	2665	4440	7990
650	125	525	695	1045	1570	2615	4355	7840
700	110	520	690	1035	1555	2590	4320	7775
750	95	475	630	945	1420	2365	3945	7100
800	80	390	520	780	1175	1955	3260	5865
850	65	270	355	535	805	1340	2230	4010
900	50	170	230	345	515	860	1430	2570
950	35	105	140	205	310	515	860	1545
1000	20	50	70	105	155	260	430	770

Special Class Buttwelding End Valves Only

Temperature. °F	Working Pressure by Classes, psig (2)							
	150	300	400	600	900	1500	2500	4500
−20 to 100	265	695	925	1390	2085	3470	5785	10415
200	265	695	925	1390	2085	3470	5785	10415
300	265	695	925	1390	2085	3470	*57 85*	10415
400	265	695	925	1390	2085	3470	5785	10415
500	265	695	925	1390	2085	3470	5785	10415
600	265	695	925	1390	2080	3470	5780	10405
650	260	680	910	1360	2040	3400	*5670*	10205
700	255	665	885	1330	1995	3320	5535	9965
750	225	590	790	1185	1775	2960	4930	8870
800	190	490	650	980	1465	2445	4070	7330
350	130	335	445	670	1005	1670	2785	5015
900	85	215	285	430	645	1070	1785	3215
950	50	130	170	260	385	645	1070	1930
1000	25	65	85	130	195	320	535	965

The above ratings are all subject to the stipulations made on page appendix 13-1 and the following:

(1) For notes applicable to material groups, see page appendix 13-2
(2) Ratings are maximum allowable non-shock working pressures at the temperature shown for the applicable material. For intermediate temperatures linear interpolation is permitted.
(3) Applies only to buttwelding end valves manufactured to ANSI B16.34.

Pressure-Temperature Ratings for Flanges, Flanged Fittings and Flanged and Buttwelding End Valves

Pipe Flanges and Flanged Fittings ANSI Standard B16.5
Flanged and Buttwelding End Valves ANSI Standard B16.34

Ratings for Materials Group 1.4: A106-B, A350-LF1, A515-60, A516-60, A672-B60, A672-C60, A675-60, A696 Gr.B (1)

Pipe Flanges and Flanged Fittings
Standard Class Valves—Flanged and Buttwelding End

Temperature, °F	Working Pressure by Classes, psig (2)							
	150	300	400	600	900	1500	2500	4500 (3)
−20 to 100	235	620	825	1235	1850	3085	5145	9260
200	215	560	750	1125	1685	2810	4680	8425
300	210	550	730	1095	1640	2735	4560	8210
400	200	530	705	1060	1585	2645	4405	7930
500	170	500	665	995	1495	2490	4)50	7470
600	140	455	610	915	1370	2285	3805	6850
650	125	450	600	895	1345	2245	3740	6725
700	110	450	600	895	1345	2245	3740	6725
750	95	445	590	885	1325	2210	3685	6635
800	80	370	495	740	1110	1850	3085	5555
850	65	270	355	535	805	1340	2230	4010
900	50	170	230	345	515	860	1430	2570
950	35	105	140	205	310	515	860	1545
1000	20	50	70	105	155	260	430	770

Special Class Buttwelding End Valves Only

Temperature. °F	Working Pressure by Classes, psig (2)							
	150	300	400	600	900	1500	2500	4500
−20 to 100	245	645	860	1285	1930	3215	5360	9645
200	245	645	860	1285	1930	3215	5360	9645
300	245	645	860	1285	1930	3215	5360	9645
400	245	645	860	1285	1930	3215	5360	9645
500	245	645	860	1285	1930	3215	5360	9645
600	230	595	795	1190	1785	2975	4955	8920
650	225	585	780	1170	1750	2920	4865	8760
700	220	580	770	1160	1735	2895	4820	8680
750	210	555	740	1105	1660	2765	4610	8295
800	180	465	620	925	1390	2315	3860	6945
850	130	335	445	670	1005	1670	2785	5015
900	85	215	285	430	645	1070	1785	3215
950	50	130	170	260	385	645	1070	1930
1000	25	65	85	130	195	320	535	965

The above ratings are all subject to the stipulations made on page appendix 13-1 and the following:

(1) For notes applicable to material groups, see page appendix 13-2
(2) Ratings are maximum allowable non-shock working pressures at the temperature shown for the applicable material. For intermediate temperatures linear interpolation is permitted.
(3) Applies only to buttwelding end valves manufactured to ANSI B16.34.

Pressure-Temperature Ratings for Flanges, Flanged Fittings and Flanged and Buttwelding End Valves

Pipe Flanges and Flanged Fittings ANSI Standard B16.5
Flanged and Buttwelding End Valves ANSI Standard B16.34

Ratings for Materials Group 1.5: A182-F1, A204-A, A204-B, A217-WC1, A352-LC1, A691-CM70 (1)

Pipe Flanges and Flanged Fittings
Standard Class Valves—Flanged and Buttwelding End

Temperature, °F	Working Pressure by Classes, psig (2)							
	150	300	400	600	900	1500	2500	4500 (3)
−20 to 100	265	695	925	1390	2085	3470	5785	10415
200	260	680	905	1360	2035	3395	5660	10185
300	230	655	870	1305	1955	3260	5435	9780
400	200	640	855	1280	1920	3200	5330	9595
500	170	620	830	1245	1865	3105	5180	9320
600	140	605	805	1210	1815	3025	5040	9070
650	125	590	785	1175	1765	2940	4905	8825
700	110	570	775	1135	1705	2840	4730	8515
750	95	530	710	1065	1595	2660	4430	7970
800	80	510	675	1015	1525	2540	4230	7610
850	65	485	650	975	1460	2435	4060	7305
900	50	450	600	900	1350	2245	3745	6740
950	35	280	375	560	845	1405	2345	4215
1000	20	165	220	330	495	825	1370	2470

Special Class Buttwelding End Valves Only

Temperature. °F	Working Pressure by Classes, psig (2)							
	150	300	400	600	900	1500	2500	4500
−20 to 100	265	695	925	1390	2085	3470	5785	10415
200	265	695	925	1390	2085	3470	5785	10415
300	265	695	925	1390	2085	3470	5785	10415
400	265	695	925	1390	2085	3470	5785	10415
500	265	695	925	1390	2085	3470	5785	10415
600	265	695	925	1390	2085	3470	5785	10415
650	265	695	925	1390	2085	3470	5785	10415
700	265	695	925	1390	2085	3470	5785	10415
750	265	695	925	1390	2085	3470	5785	10415
800	265	695	925	1390	2085	3470	5785	10415
850	260	680	905	1355	2030	3335	5645	10160
900	225	590	785	1175	1760	2935	4895	8810
950	135	350	470	705	1055	1755	2930	5270
1000	80	205	275	410	615	1030	1715	3085

The above ratings are all subject to the stipulations made on page appendix 13-1 and the following:

(1) For notes applicable to material groups, see page appendix 13-2
(2) Ratings are maximum allowable non-shock working pressures at the temperature shown for the applicable material. For intermediate temperatures linear interpolation is permitted.
(3) Applies only to buttwelding end valves manufactured to ANSI B16.34.

The above ratings are all subject to the stipulations made on page 58 ond the following:

(1) For notes applicable to material groups, see page 60.

(2) Ratings are maximum allowable non-shock working pressures ot the temperature shown for the applicable material. Fo' intermediate temperatures linear interpolation is permitted.

(3) Applies only to buttwelding end valves manufactured to ANSI 616.34.

Pressure-Temperature Ratings for Flanges, Flanged Fittings and Flanged and Buttwelding End Valves

Flanged and Buttwelding End Valves ANSI Standard B16.34

Ratings for Materials Group 1.6: A335-P1, A369-FP1, A387-12 C1.1, A387-2 C1.1, A387-2 C1.2, A691-1/2 Cr. (1)

Standard Class Valves—Flanged and Buttwelding End

Temperature, °F	Working Pressure by Classes, psig (2)							
	150	300	400	600	900	1500	2500	4500 (3)
−20 to 100	225	590	785	1175	1760	2935	4895	8810
200	225	585	775	1165	1745	2910	4850	8735
300	215	560	745	1115	1675	2790	4645	8365
400	200	550	735	1100	1650	2745	4580	8240
500	170	535	710	1065	1600	2665	4440	7990
600	140	520	690	1035	1555	2590	4320	7775
650	125	510	680	1020	1530	2550	4250	7655
700	no	500	665	1000	1500	2500	4165	7500
750	95	470	625	940	1410	2350	3915	7045
800	80	460	615	920	1380	2300	3830	6890
850	65	450	600	900	1350	2245	3745	6740
900	50	430	570	860	1285	2145	3570	6430
950	35	280	375	560	845	1405	2345	4215
1000	20	165	220	330	495	825	1370	2470
1050	20(4)	140	185	275	410	685	1145	2060
1100	20(4)	95	130	190	290	480	800	1440
1150	20(4|	50	70	105	155	260	430	770
1200	15(4)	35	45	70	105	170	285	515

Special Class Buttwelding End Valves Only

Temperature. °F	Working Pressure by Classes, psig (2)							
	150	300	400	600	900	1500	2500	4500
−20 to 100	225	590	785	1175	1760	2935	4895	8810
200	225	590	785	1175	1760	2935	4895	8810
300	225	590	785	1175	1760	2935	4895	8810
400	225	590	785	1175	1760	2935	4895	8810
500	225	590	785	1175	1760	2935	4895	8810
600	225	590	785	1175	1760	2935	4895	8810
650	225	590	785	1175	1760	2935	4895	8810
700	225	590	785	1175	1760	2935	4895	8810
750	225	590	785	1175	1760	2935	4895	8810
800	220	575	765	1150	1725	2870	4785	8615
850	215	560	750	1125	1685	2810	4680	8420
900	205	535	715	1070	1610	2680	4465	8035
950	135	350	470	705	1055	1755	2930	5270
1000	80	205	275	410	615	1030	1715	3085
1050	65	170	230	345	515	860	1430	2570
1100	45	120	160	240	360	600	1000	1800
1150	25	65	85	130	195	320	535	965
1200	15	45	60	85	130	215	360	645

The above ratings are all subject to the stipulations made on page appendix 13-1 and the following:

(1) For notes applicable to material groups, see page appendix 13-2
(2) Ratings are maximum allowable non-shock working pressures at the temperature shown for the applicable material. For intermediate temperatures linear interpolation is permitted.
(3) Applies only to buttwelding end valves manufactured to ANSI B16.34.
(4) For welding end valves Only. Flanged end volve ratings terminate ot 1000°F.

Pressure-Temperature Ratings for Flanges, Flanged Fittings and Flanged and Buttwelding End Valves

Pipe Flanges and Flanged Fittings ANSI Standard B16.5
Flanged and Buttwelding End Valves ANSI Standard B 16.34

Ratings for Materials Group 1.7: A182-F2, A204-C, A217-WC4, A217-WC5, A691-CM75 (1)

Pipe Flanges and Flanged Fittings
Standard Class Valves—Flanged and Buttwelding End

Temperature, °F	Working Pressure by Classes, psig (2)							
	150	300	400	600	900	1500	2500	4500 (3)
−20 to 100	290	750	1000	1500	2250	3750	6250	11250
200	260	750	1000	1500	2250	3750	6250	11250
300	230	730	970	1455	2185	3640	6070	10925
400	200	705	940	1410	2115	3530	5880	10585
500	170	665	885	1330	1995	3325	5540	9965
600	140	605	805	1210	1815	3025	5040	9070
650	125	590	785	1175	1765	2940	4905	8825
700	no	570	755	1135	1705	2840	4730	8515
750	95	530	710	1065	1595	2660	4430	7970
800	80	510	675	1015	1525	2540	4230	7610
850	65	485	650	975	1460	2435	4060	7305
900	50	450	600	900	1350	2245	3745	6740
950	35	345	460	685	1030	1715	2860	5145
1000	20	215	285	425	640	1065	1770	3190
1050	20(4)	190	250	380	565	945	1570	2830

Special Class Buttwelding End Valves Only

Temperature. °F	Working Pressure by Classes, psig (2)							
	150	300	400	600	900	1500	2500	4500
−20 to 100	290	750	1000	1500	2250	3750	6250	11250
200	290	750	1000	1500	2250	3750	6250	11250
300	290	750	1000	1500	2250	3750	6250	11250
400	290	750	1000	1500	2250	3750	6250	11250
500	290	750	1000	1500	2250	3750	6250	11250
600	290	750	1000	1500	2250	3750	6250	11250
650	290	750	1000	1500	2250	3750	6250	11250
700	280	735	980	1465	2200	3665	6110	10995
750	280	730	970	1460	2185	3645	6070	10930
800	275	720	960	1440	2160	3600	6000	10800
850	260	680	905	1355	2030	3385	5645	10160
900	230	600	800	1200	1800	3000	5000	9000
950	165	430	570	860	1285	2145	3570	6430
1000	100	265	355	530	800	1330	2215	3985
1050	90	235	315	470	710	1180	1965	3535

The above ratings are all subject to the stipulations made on page appendix 13-1 and the following:

(1) For notes applicable to material groups, see page appendix 13-2
(2) Ratings are maximum allowable non-shock working pressures at the temperature shown for the applicable material. For intermediate temperatures linear interpolation is permitted.
(3) Applies only to buttwelding end valves manufactured to ANSI B16.34.
(4) For welding end valves Only. Flanged end volve ratings terminate ot 1000°F.

Pressure-Temperature Ratings for Flanges, Flanged Fittings and Flanged and Buttwelding End Valves

Flanged and Buttwelding End Valves ANSI Standard B16.34

Ratings for Materials Group 1.8: A335-P11, A335-P12, A335-P22, A369-FP11, A369-FP12, A369-FP22, A387-1A387-12 C1.2, A387-22 C1.1, A691-1 Cr., A691-1 1/4 Cr., A691-2 1/4 Cr. (1)

Standard Class Valves—Flanged and Buttwelding End

Temperature, °F	Working Pressure by Classes, psig (2)							
	150	300	400	600	900	1500	2500	4500 (3)
−20 to 100	235	620	825	1235	1850	3085	5145	9260
200	220	570	765	1145	1715	2860	4765	8580
300	215	555	740	1105	1660	2765	4610	8300
400	200	540	720	1080	1615	2695	4490	8085
500	170	530	705	1060	1585	2645	4405	7930
600	140	515	685	1030	1545	2570	4285	7715
650	125	500	665	995	1495	2490	4150	7470
700	1 to	480	640	965	1445	2405	4010	7220
750	95	470	625	940	1410	2345	3910	7035
800	80	460	615	920	1385	2305	3840	6910
850	65	445	595	895	1340	2230	3720	6695
900	50	435	560	870	1305	2170	3620	6510
950	35	380	505	755	1130	1885	3145	5660
1000	20	225	300	445	670	1115	1860	3345
1050	20(4)	140	185	275	410	685	1145	2060
1100	20(4)	95	130	190	290	480	800	1440
1150	20(4)	50	70	105	155	260	430	770
1200	15(4)	35	45	70	105	170	285	515

Special Class Buttwelding End Valves Only

Temperature. °F	Working Pressure by Classes, psig (2)							
	150	300	400	600	900	1500	2500	4500
−20 to 100	245	645	860	1285	1930	3215	5360	9645
200	245	645	860	1285	1930	3215	5360	9645
300	245	645	860	1285	1930	3215	5360	9645
400	245	645	860	1285	1930	3215	5360	9645
500	245	645	860	1285	1930	3215	5360	9645
600	245	645	860	1285	1930	3215	5360	9645
650	245	645	860	1285	1930	3215	5360	9645
700	240	625	835	1255	1880	3135	5225	9400
750	235	610	815	1220	1835	3055	5090	9160
800	230	600	800	1200	1800	3000	5000	9000
850	225	580	775	1165	1745	2905	4845	8720
900	215	560	750	1125	1685	2810	4680	8420
950	180	470	630	945	1415	2360	3930	7070
1000	105	280	370	560	835	1395	2320	4180
1050	65	170	230	345	515	860	1430	2570
1100	45	120	160	240	360	600	1000	1800
1150	25	65	85	130	195	320	535	965
1200	15	45	60	85	130	215	360	645

The above ratings are all subject to the stipulations made on page appendix 13-1 and the following:

(1) For notes applicable to material groups, see page appendix 13-2
(2) Ratings are maximum allowable non-shock working pressures at the temperature shown for the applicable material. For intermediate temperatures linear interpolation is permitted.
(3) Applies only to buttwelding end valves manufactured to ANSI B16.34.
(4) For welding end valves Only. Flanged end volve ratings terminate ot 1000°F.

Pressure-Temperature Ratings for Flanges, Flanged Fittings and Flanged and Buttwelding End Valves

Pipe Flanges and Flanged Fittings ANSI Standard B16.5
Flanged and Buttwelding End Valves ANSI Standard B16.34

Ratings for Materials Group 1.9: A182-F11, A182-F12, A217-WC6, A387-11 C1.2, A739-B11 (1)

Pipe Flanges and Flanged Fittings
Standard Class Valves—Flanged and Buttwelding End

Temperature, °F	Working Pressure by Classes, psig (2)							
	150	300	400	600	900	1500	2500	4500 (3)
−20 to 100	290	750	1000	1500	2250	3750	6250	11250
200	260	710	950	1425	2135	3560	5930	10675
300	230	675	895	1345	2020	3365	5605	10090
400	200	660	880	1315	1975	3290	5485	9875
500	170	640	855	1285	1925	3210	5350	9630
600	140	605	805	1210	1815	3025	5040	9070
650	125	590	785	1175	1765	2940	4905	8825
700	110	570	755	1135	1705	2840	4730	8515
750	95	530	710	1065	1595	2660	4430	7970
800	80	510	675	1015	1525	2540	4230	7610
850	65	485	650	975	1460	2435	4060	7305
900	50	450	600	900	1350	2245	3745	6740
950	35	380	505	755	1130	1885	3145	5660
1000	20	225	300	445	670	1115	1860	3345
1050	20(4)	140	185	275	410	685	1145	2060
1100	20(4)	95	130	190	290	480	800	1440
1150	20[4]	50	70	105	155	260	430	770
1200	15(4)	35	45	70	105	170	285	515

Special Class Buttwelding End Valves Only

Temperature. °F	Working Pressure by Classes, psig (2)							
	150	300	400	600	900	1500	2500	4500
−20 to 100	290	750	1000	1500	2250	3750	6250	11250
200	290	750	1000	1500	2250	3750	6250	11250
300	290	750	1000	1500	2250	3750	6250	11250
400	290	750	1000	1500	2250	3750	6250	11250
500	290	750	1000	1500	2250	3750	6250	11250
600	290	750	1000	1500	2250	3750	6250	11250
650	275	720	960	1440	2160	3600	6000	10800
700	265	690	920	1380	2070	3450	5750	10305
750	255	665	865	1330	1995	3320	5535	9965
800	245	635	845	1270	1905	3170	5285	9515
850	235	610	810	1220	1825	3045	5070	9130
900	215	560	750	1125	1685	2810	4680	8420
950	180	470	630	945	1415	2360	3930	7070
1000	105	280	370	560	835	1395	2320	4180
1050	65	170	230	345	515	860	1430	2570
1100	45	120	160	240	360	600	1000	1800
1150	25	65	85	130	195	320	535	965
1200	15	45	60	85	130	215	360	645

The above ratings are all subject to the stipulations made on page appendix 13-1 and the following:

(1) For notes applicable to material groups, see page appendix 13-2
(2) Ratings are maximum allowable non-shock working pressures at the temperature shown for the applicable material. For intermediate temperatures linear interpolation is permitted.
(3) Applies only to buttwelding end valves manufactured to ANSI B16.34.
(4) For welding end valves Only. Flanged end volve ratings terminate ot 1000°F.

Pressure-Temperature Ratings for Flanges, Flanged Fittings and Flanged and Buttwelding End Valves

Pipe Flanges and Flanged Fittings ANSI Standard B16.5
Flanged and Buttwelding End Valves ANSI Standard B 16.34

Ratings for Materials Group 1.10: A182-F22, A217-WC9, A387-22, C1.2, A739-B22 (1)

Pipe Flanges and Flanged Fittings
Standard Class Valves—Flanged and Buttwelding End

Temperature, °F	Working Pressure by Classes, psig (2)							
	150	300	400	600	900	1500	2500	4500 (3)
−20 to 100	290	750	1000	1500	2250	3750	6250	11250
200	260	715	955	1430	2150	3580	5965	10740
300	230	675	905	1355	2030	3385	5640	10150
400	200	650	865	1295	1945	3240	5400	9720
500	170	640	855	1280	1920	3200	5330	9595
600	140	605	805	1210	1815	3025	5040	9070
650	125	590	785	1175	1765	2940	4905	8825
700	110	570	755	1135	1705	2840	4730	8515
750	95	530	710	1065	1595	2660	4430	7970
800	80	510	675	1015	1525	2540	4230	7610
850	65	485	650	975	1460	2435	4060	7305
900	50	450	600	900	1350	2245	3745	6740
950	35	380	505	755	1130	1885	3145	5660
1000	20	270	355	535	805	1340	2230	4010
1050	20(4)	200	265	400	595	995	1660	2985
1100	20(4)	115	150	225	340	565	945	1700
1150	20(4)	105	140	205	310	515	860	1545
1200	20(4)	55	75	no	165	275	460	825

Special Class Buttwelding End Valves Only

Temperature. °F	Working Pressure by Classes, psig (2)							
	150	300	400	600	900	1500	2500	4500
−20 to 100	290	750	1000	1500	2250	3750	6250	11250
200	290	750	1000	1500	2250	3750	6250	11250
300	290	750	1000	1500	2250	3750	6250	11250
400	290	750	1000	1500	2250	3750	6250	11250
500	285	740	985	1475	2210	3685	6145	11060
600	285	740	985	1475	2210	3685	6145	11060
650	285	740	985	1475	2210	3685	6145	11060
700	280	735	980	1465	2200	3665	6110	10995
750	280	730	970	1460	2185	3645	6070	10930
800	275	720	960	1440	2160	3600	6000	10800
850	260	680	905	1355	2030	3385	5645	10160
900	230	600	800	1200	1800	3000	5000	9000
950	180	470	630	945	1415	2360	3930	7070
1000	130	335	445	670	1005	1670	2785	5015
1050	95	250	330	500	745	1245	2070	3730
1100	55	140	190	285	425	710	1180	2120
1150	50	130	170	260	385	645	1070	1930
1200	25	70	90	140	205	345	570	1030

The above ratings are all subject to the stipulations made on page appendix 13-1 and the following:

(1) For notes applicable to material groups, see page appendix 13-2
(2) Ratings are maximum allowable non-shock working pressures at the temperature shown for the applicable material. For intermediate temperatures linear interpolation is permitted.
(3) Applies only to buttwelding end valves manufactured to ANSI B16.34.
(4) For welding end valves Only. Flanged end volve ratings terminate ot 1000°F.

Pressure-Temperature Ratings for Flanges, Flanged Fittings and Flanged and Buttwelding End Valves

Flanged and Buttwelding End Valves ANSI Standard B16.34

Ratings for Materials Group 1.11: A182-F21, A302-A, A302-B, A302-C, A302-D, A387-21 C1.2, A537-C1.2 (1)

Standard Class Valves—Flanged and Buttwelding End

Temperature, °F	Working Pressure by Classes, psig (2)							
	150	300	400	600	900	1500	2500	4500 (3)
–20 to 100	290	750	1000	1500	2250	3750	6250	11250
200	260	750	1000	1500	2250	3750	6250	11250
300	230	730	970	1455	2185	3640	6072	10925
400	200	705	940	1410	2115	3530	5880	10585
500	170	665	885	1330	1995	3325	5540	9965
600	140	605	805	1210	1815	3025	5040	9070
650	125	590	785	1175	1765	2940	4905	8825
700	110	570	755	1135	1705	2840	4730	8515
750	95	530	710	1065	1595	2660	4430	7970
800	80	510	675	1015	1525	2540	4230	7610
850	65	485	650	975	1460	2435	4060	7305
900	50	410	550	825	1235	2060	3430	6170
950	35	290	390	585	875	1460	2430	4370
1000	20	190	250	380	565	945	1570	2830
1050	20(4)	190	250	380	565	945	1570	2830
1100	20(4)	140	185	275	410	685	1145	2060
1150	20(4)	95	125	185	280	465	770	1390
1200	20(4)	50	70	105	155	260	430	770

Special Class Buttwelding End Valves Only

Temperature. °F	Working Pressure by Classes, psig (2)							
	150	300	400	600	900	1500	2500	4500
–20 to 100	290	750	1000	1500	2250	3750	6250	11250
200	290	750	1000	1500	2250	3750	6250	11250
300	290	750	1000	1500	2250	3750	6250	11250
400	285	745	995	1490	2240	3730	6215	11185
500	285	740	985	1475	2210	3685	6145	11060
600	285	740	985	1475	2210	3685	6145	11060
650	285	740	985	1475	2210	3685	6145	11060
700	280	735	980	1465	2200	3665	6110	10995
750	280	730	970	1460	2185	3645	6070	10930
800	275	720	960	1440	2160	3600	6000	10800
850	260	675	900	1345	2020	3365	5610	10095
900	200	515	685	1030	1545	2570	4285	7715
950	140	365	485	730	1095	1820	3035	5465
1000	90	235	315	470	705	1180	1965	3535
1050	90	235	315	470	705	1180	1965	3535
1100	65	170	230	345	515	860	1430	2570
1150	45	115	155	230	350	580	965	1735
1200	25	65	85	130	195	320	535	965

The above ratings are all subject to the stipulations made on page appendix 13-1 and the following:

(1) For notes applicable to material groups, see page appendix 13-2
(2) Ratings are maximum allowable non-shock working pressures at the temperature shown for the applicable material. For intermediate temperatures linear interpolation is permitted.
(3) Applies only to buttwelding end valves manufactured to ANSI B16.34.
(4) For welding end valves Only. Flanged end volve ratings terminate ot 1000°F.

Pressure-Temperature Ratings for Flanges, Flanged Fittings and Flanged and Buttwelding End Valves

Flanged and Buttwelding End Valves ANSI Standard B16.34

Ratings for Materials Group 1.12: A335-P5, A335-P5b, A369-FP5, A387-5, C1.1, A387-5, Cl.2, A691-5 Cr. (1)

Standard Class Valves—Flanged and Buttwelding End

Temperature, °F	Working Pressure by Classes, psig (2)							
	150	300	400	600	900	1500	2500	4500 (3)
–20 to 100	235	620	825	1235	1850	3085	5145	9260
200	215	560	750	1125	1685	2810	4680	8425
300	205	535	710	1065	1600	2665	4440	7990
400	195	510	660	1015	1525	2540	4235	7620
500	170	490	650	975	1465	2440	4065	7315
600	140	470	625	940	1410	2345	3910	7035
650	125	460	615	920	1385	2305	3840	6910
700	no	455	605	905	1360	2265	3770	6790
750	95	445	595	895	1340	2230	3720	6695
800	80	435	580	870	1305	2170	3620	6510
850	65	410	550	825	1235	2060	3430	6170
900	50	355	470	705	1060	1765	2945	5300
950	35	260	350	520	780	1305	2170	3910
1000	20	190	255	385	575	960	1600	2880
1050	20(4)	140	190	280	420	705	1170	2110
1100	20(4)	105	140	205	310	515	860	1545
1150	20(4)	70	90	140	205	345	570	1030
1200	20(4)	45	60	90	135	225	370	670

Special Class Buttwelding End Valves Only

Temperature. °F	Working Pressure by Classes, psig (2)							
	150	300	400	600	900	1500	2500	4500
–20 to 100	245	645	860	1285	1930	3215	5360	9645
200	245	645	860	1285	1930	3215	5360	9645
300	245	645	860	1285	1930	3215	5360	9645
400	245	645	860	1285	1930	3215	5360	9645
500	240	620	830	1245	1865	3110	5180	9320
600	230	600	800	1200	1800	3000	5000	9000
650	225	590	785	1175	1760	2935	4895	8810
700	220	575	765	1150	1725	2870	4785	8615
750	215	560	750	1125	1685	2810	4680	8420
800	210	550	730	1100	1645	2745	4570	8230
850	200	515	685	1030	1545	2570	4285	7715
900	170	440	590	885	1325	2210	3680	6620
950	125	325	435	650	980	1630	2715	4885
1000	90	240	320	480	720	1200	2000	3600
1050	70	175	235	350	530	880	1465	2635
1100	50	130	170	260	385	645	1070	1930
1150	35	85	115	170	260	430	715	1285
1200	20	55	75	no	170	280	465	835

The above ratings are all subject to the stipulations made on page appendix 13-1 and the following:

(1) For notes applicable to material groups, see page appendix 13-2
(2) Ratings are maximum allowable non-shock working pressures at the temperature shown for the applicable material. For intermediate temperatures linear interpolation is permitted.
(3) Applies only to buttwelding end valves manufactured to ANSI B16.34.
(4) For welding end valves Only. Flanged end volve ratings terminate ot 1000°F.

Pressure-Temperature Ratings for Flanges, Flanged Fittings and Flanged and Buttwelding End Valves

Pipe Flanges and Flanged Fittings ANSI Standard B16.5
Flanged and Buttwelding End Valves ANSI Standard B16.34

Ratings for Materials Group 1.13: A182-F5, A185-F5a, A217-C5 (1)

Standard Class Valves—Flanged and Buttwelding End

Temperature, °F	Working Pressure by Classes, psig (2)							
	150	300	400	600	900	1500	2500	4500 (3)
–20 to 100	290	750	1000	1500	2250	3750	6250	11250
200	260	750	1000	1500	2250	3750	6250	11250
300	230	730	970	1455	2185	3640	6070	10925
400	200	705	940	1410	2115	3530	5880	10585
500	170	665	885	1330	1995	3325	5540	9965
600	140	605	805	1210	1815	3025	5040	9070
650	125	590	785	1175	1765	2940	4905	8825
700	110	570	755	1135	1705	2840	4730	8515
750	95	530	710	1065	1595	2660	4430	7970
800	80	500	665	995	1490	2485	4145	7460
850	65	440	585	880	1315	2195	3660	6585
900	50	355	470	705	1060	1765	2945	5300
950	35	260	350	520	780	1305	2170	3910
1000	20	190	255	385	575	960	1600	2880
1050	20(4)	140	190	280	420	705	1170	2110
1100	20(4)	105	140	205	310	515	860	1545
1150	20(4|	70	90	140	205	345	570	1030
1200	20(4)	45	60	90	135	225	370	670

Special Class Buttwelding End Valves Only

Temperature. °F	Working Pressure by Classes, psig (2)							
	150	300	400	600	900	1500	2500	4500
–20 to 100	290	750	1000	1500	2250	3750	6250	11250
200	290	750	1000	1500	2250	3750	6250	11250
300	290	750	1000	1500	2250	3750	6250	11250
400	290	750	1000	1500	2250	3750	6250	11250
500	290	750	1000	1500	2250	3750	6250	11250
600	290	750	1000	1500	2250	3750	6250	11250
650	290	750	1000	1500	2250	3750	6250	11250
700	280	735	980	1465	2200	3665	6110	10995
750	265	685	915	1370	2060	3430	5715	10285
800	240	620	830	1245	1865	3110	5180	9320
850	210	550	730	1100	1645	2745	4570	8230
900	170	440	590	885	1325	2210	3680	6620
950	125	325	435	650	980	1630	2715	4885
1000	90	240	320	480	720	1200	2000	3600
1050	70	175	235	350	530	880	1465	2635
1100	50	130	170	260	385	645	1070	1930
1150	35	85	115	170	260	430	715	1285
1200	20	55	75	110	170	280	465	835

The above ratings are all subject to the stipulations made on page appendix 13-1 and the following:

(1) For notes applicable to material groups, see page appendix 13-2
(2) Ratings are maximum allowable non-shock working pressures at the temperature shown for the applicable material. For intermediate temperatures linear interpolation is permitted.
(3) Applies only to buttwelding end valves manufactured to ANSI B16.34.
(4) For welding end valves Only. Flanged end volve ratings terminate ot 1000°F.

Pressure-Temperature Ratings for Flanges, Flanged Fittings and Flanged and Buttwelding End Valves

Pipe Flanges and Flanged Fittings ANSI Standard B16.5
Flanged and Buttwelding End Valves ANSI Standard B16.34

Ratings for Materials Group 1.14: A182-F9, A217-C12 (1)

Standard Class Valves—Flanged and Buttwelding End

Temperature, °F	Working Pressure by Classes, psig (2)							
	150	300	400	600	900	1500	2500	4500 (3)
–20 to 100	290	750	1000	1500	2250	3750	6250	11250
200	260	750	1000	1500	2250	3750	6250	11250
300	230	730	970	1455	2185	3640	6070	10925
400	200	705	940	1410	2115	3530	5880	10585
500	170	665	885	1330	1995	3325	5540	9965
600	140	605	805	1210	1815	3025	5040	9070
650	125	590	785	1175	1765	2940	4905	8825
700	110	570	755	1135	1705	2840	4730	8515
750	95	530	710	1065	1595	2660	4430	7970
800	80	510	675	1015	1525	2540	4230	7610
850	65	485	650	975	1460	2435	4060	7305
900	50	450	600	900	1350	2245	3745	6740
950	35	370	495	740	1110	1850	3085	5555
1000	20	290	390	585	875	1460	2430	4370
1050	20(4)	190	250	380	565	945	1570	2830
1100	20(4)	115	150	225	340	565	945	1700
1150	20(4)	75	100	150	225	380	630	1130
1200	20(4)	50	70	105	155	260	430	770

Special Class Buttwelding End Valves Only

Temperature. °F	Working Pressure by Classes, psig (2)							
	150	300	400	600	900	1500	2500	4500
–20 to 100	290	750	1000	1500	2250	3750	6250	11250
200	290	750	1000	1500	2250	3750	6250	11250
300	290	750	1000	1500	2250	3750	6250	11250
400	290	750	1000	1500	2250	3750	6250	11250
500	290	750	1000	1500	2250	3750	6250	11250
600	290	750	1000	1500	2250	3750	6250	11250
650	290	750	1000	1500	2250	3750	6250	11250
700	280	735	980	1465	2200	3665	6110	10995
750	280	730	970	1460	2185	3645	6070	10930
800	275	720	960	1440	2160	3600	6000	10800
850	255	660	880	1320	1980	3300	5500	9900
900	215	560	750	1125	1685	2810	4680	8420
950	180	465	620	925	1390	2315	3860	6945
1000	140	365	485	730	1095	1820	3035	5465
1050	90	235	315	470	710	1180	1965	3535
1100	55	140	190	285	425	710	1180	2120
1150	35	95	125	190	285	470	785	1415
1200	25	65	85	130	195	320	535	965

The above ratings are all subject to the stipulations made on page appendix 13-1 and the following:

(1) For notes applicable to material groups, see page appendix 13-2
(2) Ratings are maximum allowable non-shock working pressures at the temperature shown for the applicable material. For intermediate temperatures linear interpolation is permitted.
(3) Applies only to buttwelding end valves manufactured to ANSI B16.34.
(4) For welding end valves Only. Flanged end volve ratings terminate ot 1000°F.

Pressure-Temperature Ratings for Flanges, Flanged Fittings and Flanged and Buttwelding End Valves

Pipe Flanges and Flanged Fittings ANSI Standard B16.5
Flanged and Buttwelding End Valves ANSI Standard B16.34

Ratings for Materials Group 2.1: A182-F304,
A182-F304H, A240-304, A240-304H, A312-TP304, A312-TP304H, A351-CF3, A351-CF8, A358-304 (1)
A376-TP304, A376-TP304H, A430-FP304, A430-FP304H, A479-304, A479-304H

Standard Class Valves—Flanged and Buttwelding End

Temperature, °F	Working Pressure by Classes, psig (2)							
	150	300	400	600	900	1500	2500	4500 (3)
–20 to 100	275	720	960	1440	2160	3600	6000	10800
200	235	600	800	1200	1800	3000	5000	9000
300	205	530	705	1055	1585	2640	4400	7920
400	180	470	630	940	1410	2350	3920	7055
500	170	435	585	875	1310	2185	3640	6550
600	140	415	555	830	1245	2075	3460	6230
650	125	410	545	815	1225	2040	3400	6120
700	110	405	540	805	1210	2015	3360	6050
750	95	400	530	795	1195	1990	3320	5975
800	80	395	525	790	1180	1970	3280	$905
850	65	390	520	780	1165	1945	3240	5830
900	50	385	510	770	1150	1920	3200	5760
950	35	375	500	750	1125	1870	3120	5615
1000	20	325	430	645	965	1610	2685	4835
1050	20(4)	310	410	620	925	1545	2570	4630
1100	20(4)	260	345	515	770	1285	2145	3860
1150	20(4)	195	260	390	585	980	1630	2930
1200	20(4)	165	205	310	465	770	1285	2315
1250	20(4)	110	145	220	330	550	915	1645
1300	20(4)	85	110	165	245	410	685	1235
1350	20(4)	60	85	125	185	310	515	925
1400	20(4)	50	65	95	145	240	400	720
1450	15(4)	35	45	70	105	170	285	515
1500	10(4)	25	30	50	70	120	200	360

Special Class Buttwelding End Valves Only

Temperature. °F	Working Pressure by Classes, psig (2)							
	150	300	400	600	900	1500	2500	4500
–20 to 100	290	750	1000	1500	2250	3750	6250	11250
200	255	660	880	1320	1980	3300	5500	9900
300	225	590	785	1175	1760	2935	4895	8810
400	200	525	700	1045	1570	2615	4360	7845
500	185	490	650	975	1465	2440	4065	7315
600	180	465	620	925	1390	2315	3860	6945
650	175	455	605	910	1365	2270	3785	6815
700	175	450	600	900	1350	2250	3750	6750
750	170	445	595	890	1335	2225	3705	6670
800	170	440	585	875	1310	2185	3645	6560
850	165	435	580	865	1300	2165	3610	6495
900	165	430	570	860	1285	2145	3570	6430
950	160	415	555	830	1250	2080	3465	6235
1000	155	405	540	805	1210	2015	3360	6045
1050	150	385	515	770	1160	1930	3215	5785
1100	125	320	430	645	965	1610	2680	4820
1150	95	245	325	490	735	1220	2035	3665
1200	75	195	260	385	580	965	1610	2895
1250	55	140	185	275	410	685	1145	2060
1300	40	105	140	205	310	515	860	1545
1350	30	80	105	155	230	385	645	1160
1400	25	60	80	120	180	300	500	900
1450	15	45	60	85	130	215	360	645
1500	10	30	40	60	90	150	250	450

The above ratings are all subject to the stipulations made on page appendix 13-1 and the following:

(1) For notes applicable to material groups, see page appendix 13-2
(2) Ratings are maximum allowable non-shock working pressures at the temperature shown for the applicable material. For intermediate temperatures linear interpolation is permitted.
(3) Applies only to buttwelding end valves manufactured to ANSI B16.34.
(4) For welding end valves Only. Flanged end volve ratings terminate ot 1000°F.

Pressure-Temperature Ratings for Flanges, Flanged Fittings and Flanged and Buttwelding End Valves

Pipe Flanges and Flanged Fittings ANSI Standard B16.5
Flanged and Buttwelding End Valves ANSI Standard B16.34

Ratings for Materials Group 2.2: A182-F316, A182-F316H, A240-316, A240-316H, A240-317, A312-TP316, A312-TP316H, A312-TP317, A351-CF3A, A351-CF3M, A351-CF8A, A351-CF8M, A358-316, A376-TP316, A376-TP316H, A430-FP316, A430-FP316H, A479-316, A479-316H (1)

Pipe Fanges and Flanges Fittings
Standard Class Valves—Flanged and Buttwelding End

Temperature, °F	Working Pressure by Classes, psig (2)							
	150	300	400	600	900	1500	2500	4500 (3)
–20 to 100	275	720	960	1440	2160	3600	6000	10800
200	240	620	825	1240	1860	3095	5160	9290
300	215	560	745	1120	1680	2795	4660	8390
400	195	515	685	1030	1540	2570	4280	7705
500	170	480	635	955	1435	2390	3980	7165
600	140	450	600	905	1355	2255	3760	6770
650	125	445	590	890	1330	2220	3700	6660
700	110	430	575	865	1295	2160	3600	6480
750	95	425	565	845	1270	2110	3520	6335
800	80	415	555	830	1245	2075	3460	6230
850	65	405	540	810	1215	2030	3380	6085
900	50	395	525	790	1180	1970	3280	5905
950	35	385	515	775	1160	1930	3220	5795
1000	20	365	485	725	1090	1820	3030	5450
1050	20(4)	360	480	720	1080	1800	3000	5400
1100	20(4)	325	430	645	965	1610	2685	4835
1150	20(4)	275	365	550	825	1370	2285	4115
1200	20(4)	205	275	410	620	1030	1715	3085
1250	20(4)	180	245	365	545	910	1515	2725
1300	20(4)	140	185	275	410	685	1145	2060
1350	20(4)	105	140	205	310	515	860	1545
1400	20(4)	75	100	150	225	380	630	1130
1450	20(4)	60	80	115	175	290	485	875
1500	15(4)	40	55	85	125	205	345	620

Special Class Buttwelding End Valves Only

Temperature. °F	Working Pressure by Classes, psig (2)							
	150	300	400	600	900	1500	2500	4500
–20 to 100	290	750	1000	1500	2250	3750	6250	11250
200	260	680	910	1365	2045	3410	5680	10220
300	235	610	810	1220	1825	3025	5070	9130
400	220	570	760	1140	1710	2850	4750	8550
500	205	530	710	1065	1595	2660	4430	7970
600	195	505	670	1010	1510	2520	4195	7555
650	190	495	660	985	1480	2465	4110	7395
700	185	485	645	970	1455	2420	4035	7265
750	180	470	630	945	1415	2360	3930	7070
800	180	465	620	925	1390	2320	3860	6950
850	175	455	605	905	1360	2265	3775	6790
900	170	440	585	880	1320	2195	3660	6590
950	165	430	575	865	1295	2155	3595	6470
1000	160	420	560	840	1260	2105	3505	6310
1050	160	420	560	840	1260	2105	3505	6310
1100	155	405	540	805	1210	2105	3360	6045
1150	130	345	460	685	1030	1715	2860	5145
1200	100	260	345	515	770	1285	2145	3860
1250	90	230	305	455	680	1135	1895	3410
1300	65	170	230	345	515	860	1430	2570
1350	50	130	170	260	385	645	1070	1930
1400	35	95	125	190	285	470	785	1415
1450	30	75	100	145	220	365	610	1095
1500	20	50	70	105	155	260	430	770

The above ratings are all subject to the stipulations made on page appendix 13-1 and the following:

(1) For notes applicable to material groups, see page appendix 13-2
(2) Ratings are maximum allowable non-shock working pressures at the temperature shown for the applicable material. For intermediate temperatures linear interpolation is permitted.
(3) Applies only to buttwelding end valves manufactured to ANSI B16.34.
(4) For welding end valves Only. Flanged end volve ratings terminate ot 1000°F.

Pressure-Temperature Ratings for Flanges, Flanged Fittings and Flanged and Buttwelding End Valves

Pipe Flanges and Flanged Fittings ANSI Standard B16.5
Flanged and Buttwelding End Valves ANSI Standard B16.34

Ratings for Materials Group 2.3: A182-F304L, A182-F316L, A240-304L, A240-316L, A312-TP304L, A312-TP316L, A479-304L, A479-316L (1)

Pipe Fanges and Flanges Fittings
Standard Class Valves—Flanged and Buttwelding End

Temperature, °F	Working Pressure by Classes, psig (2)							
	150	300	400	600	900	1500	2500	4500 (3)
−20 to 100	230	600	800	1200	1800	3000	5000	9000
200	195	505	675	1015	1520	2530	4220	7595
300	175	455	605	910	1360	2270	3780	6805
400	160	415	550	825	1240	2065	3440	6190
500	145	380	510	765	1145	1910	3180	5725
600	140	360	480	720	1080	1800	3000	5400
650	125	350	470	700	1050	1750	2920	5255
700	no	345	460	685	1030	1715	2860	5150
750	95	335	450	670	1010	1680	2800	5040
800	80	330	440	660	985	1645	2740	4930
850	65(4)	320(4)	430(4)	645(4)	965(4)	1610(4)	2680(4)	4825(4)

Special Class Buttwelding End Valves Only

Temperature. °F	Working Pressure by Classes, psig (2)							
	150	300	400	600	900	1500	2500	4500
−20 to 100	255	670	890	1340	2005	3345	5570	10030
200	215	565	755	1130	1695	2825	4710	8480
300	195	505	675	1010	1520	2530	4215	7585
400	175	460	615	920	1385	2305	3840	6910
500	165	425	570	850	1280	2130	3550	6390
600	155	400	535	805	1205	2010	3350	6025
650	150	390	520	780	1170	1950	3250	5850
700	145	380	510	765	1145	1910	3180	5720
750	145	375	500	745	1120	1865	3110	5595
800	140	365	490	735	1100	1835	3060	5505
850	140	360	480	720	1075	1795	2990	5385

The above ratings are all subject to the stipulations made on page appendix 13-1 and the following:

(1) For notes applicable to material groups, see page appendix 13-2
(2) Ratings are maximum allowable non-shock working pressures at the temperature shown for the applicable material. For intermediate temperatures linear interpolation is permitted.
(3) Applies only to buttwelding end valves manufactured to ANSI B16.34.
(4) For welding end valves Only. Flanged end volve ratings terminate ot 1000°F.

Pressure-Temperature Ratings for Flanges, Flanged Fittings and Flanged and Buttwelding End Valves

Pipe Flanges and Flanged Fittings ANSI Standard B16.5
Flanged and Buttwelding End Valves ANSI Standard B16.34

Ratings for Materials Group 2.4: A182-F321, A182-F321H, A240-321, A240-321H, A312-TP321, A312-TP321H, A358-321, A376-TP321, A376-TP321H, A430-FP321, A430-FP321H, A479-321. A479-321H (1)

Pipe Fanges and Flanges Fittings
Standard Class Valves—Flanged and Buttwelding End

Temperature, °F	Working Pressure by Classes, psig (2)							
	150	300	400	600	900	1500	2500	4500 (3)
−20 to 100	275	720	960	1440	2160	3600	6000	10800
200	235	610	815	1220	1830	3050	5080	9145
300	210	545	725	1090	1635	2725	4540	8170
400	190	495	660	990	1485	2470	4120	7415
500	170	460	610	915	1375	2290	3820	6875
600	140	435	585	875	1310	2185	3640	6550
650	125	430	570	855	1280	2135	3560	6410
700	110	420	560	840	1260	2100	3500	6300
750	95	415	555	830	1245	2075	3460	6230
800	80	415	550	825	1240	2065	3440	6190
850	65	410	545	815	1225	2040	3400	6120
900	50	405	540	810	1215	2030	3380	6085
950	35	385	515	775	1160	1930	3220	5795
1000	20	355	475	715	1070	1785	2970	5350
1050	20(4)	345	460	695	1040	1730	2885	5195
1100	20(4)	300	400	605	905	1510	2515	4525
1150	20(4)	235	315	475	710	1185	1970	3550
1200	20(4)	180	240	365	545	910	1515	2725
1250	20(4)	140	185	280	420	705	1170	2110
1300	20(4)	105	140	210	320	530	885	1595
1350	20(4)	80	110	165	245	410	685	1235
1400	20(4)	60	80	125	185	310	515	925
1450	20(4)	50	65	95	145	240	400	720
1500	20(4)	40	50	75	115	190	315	565

Special Class Buttwelding End Valves Only

Temperature. °F	Working Pressure by Classes, psig (2)							
	150	300	400	600	900	1500	2500	4500
−20 to 100	290	750	1000	1500	2250	3750	6250	11250
200	260	680	910	1360	2040	3400	5670	10205
300	230	605	805	1210	1815	3020	5035	9065
400	210	550	735	1105	1655	2760	4600	8275
500	195	510	685	1025	1535	2560	4265	7675
600	185	485	645	970	1455	2420	4035	7265
650	185	475	635	950	1430	2380	3965	7135
700	180	470	625	935	1400	2335	3895	7010
750	180	465	620	925	1390	2315	3860	6945
800	175	460	610	920	1375	2295	3820	6880
850	175	455	605	910	1365	2270	3785	6815
900	175	455	605	905	1360	2265	3775	6790
950	175	450	600	900	1350	2250	3750	6750
1000	160	420	560	840	1260	2105	3505	6310
1050	160	420	560	840	1260	2105	3505	6310
1100	145	375	505	755	1130	1885	3145	5655
1150	115	295	395	590	885	1480	2465	4435
1200	85	225	305	455	680	1135	1895	3405
1250	70	175	235	350	525	880	1465	2635
1300	50	135	175	265	400	665	1105	1995
1350	40	105	135	205	310	515	855	1545
1400	30	75	105	155	230	385	645	1155
1450	25	60	80	120	180	300	500	900
1500	20	45	65	95	140	235	395	705

The above ratings are all subject to the stipulations made on page appendix 13-1 and the following:

(1) For notes applicable to material groups, see page appendix 13-2
(2) Ratings are maximum allowable non-shock working pressures at the temperature shown for the applicable material. For intermediate temperatures linear interpolation is permitted.
(3) Applies only to buttwelding end valves manufactured to ANSI B16.34.
(4) For welding end valves Only. Flanged end volve ratings terminate ot 1000°F.

Pressure-Temperature Ratings for Flanges, Flanged Fittings and Flanged and Buttwelding End Valves

Pipe Flanges and Flanged Fittings ANSI Standard B16.5
Flanged and Buttwelding End Valves ANSI Standard B16.34

Ratings for Materials Group 2.5: A182-F347, A182-F347H, A182-F348, A182-F348H, A240-347, A240-347H, A240-348, A240-348H, A312-TP347, A312-TP347H, A312-TP348, A312-TP348H, A351-CF8c, A358-347, A376-TP347, A376-TP347H, A376-TP348, A376-TP348H, A430-FP347, A430-FP347H, A479-347, A479-347H, A479-348, A479-348H (1)

Standard Class Valves—Flanged and Buttwelding End

Temperature, °F	Working Pressure by Classes, psig (2)							
	150	300	400	600	900	1500	2500	4500 (3)
−20 to 100	275	720	960	1440	2160	3600	6000	10800
200	245	635	850	1270	1910	3180	5300	9450
300	225	590	785	1175	1765	2940	4900	8820
400	200	555	740	1110	1665	2770	4620	8315
500	170	520	690	1035	1555	2590	4320	7775
600	140	490	655	985	1475	2460	4100	7380
650	125	480	640	960	1440	2400	4000	7200
700	110	470	625	935	1405	2340	3900	7020
750	95	460	615	920	1385	2305	3840	6910
800	80	455	610	910	1370	2280	3800	6840
850	65	445	590	890	1330	2220	3700	6660
900	50	430	575	865	1295	2160	3600	6480
950	35	385	515	775	1160	1930	3220	5795
1000	20	365	485	725	1090	1820	3030	5450
1050	20f4)	360	480	720	1080	1800	3000	5400
1100	20(4)	325	430	645	965	1610	2685	4835
1150	20(4|	275	365	550	825	1370	2285	4115
1200	20(4)	170	230	345	515	855	1430	2570
1250	20(4)	125	165	245	370	615	1030	1850
1300	20(4)	95	125	185	280	465	770	1390
1350	20(4)	70	90	135	205	345	570	1030
1400	20(4)	50	70	105	155	255	430	770
1450	20(4)	40	55	80	125	205	345	615
1500	15(4)	35	45	70	105	170	285	515

Special Class Buttwelding End Valves Only

Temperature. °F	Working Pressure by Classes, psig (2)							
	150	300	400	600	900	1500	2500	4500
−20 to 100	290	750	1000	1500	2250	3750	6250	11250
200	260	675	900	1345	2020	3365	5610	10095
300	245	635	845	1270	1905	3170	5285	9515
400	235	615	820	1225	1840	3065	5110	9195
500	220	580	770	1160	1735	2895	4820	8680
600	210	550	730	1100	1645	2745	4570	8230
650	205	535	715	1070	1610	2680	4465	8035
700	200	525	695	1045	1570	2610	4355	7835
750	200	515	685	1030	1545	2570	4285	7715
800	195	510	680	1020	1525	2545	4240	7635
850	190	495	660	990	1485	2480	4130	7435
900	185	485	645	965	1445	2410	4020	7235
950	180	470	630	945	1415	2360	3930	7070
1000	160	420	560	840	1260	2105	3505	6310
1050	160	420	560	840	1260	2105	3505	6310
1100	155	405	540	805	1260	2015	3360	6045
1150	130	345	455	685	1030	1715	2855	5145
1200	80	215	285	430	645	1070	1785	3215
1250	60	155	205	310	465	770	1285	2315
1300	45	115	155	230	345	580	965	1735
1350	35	85	115	170	255	430	715	1285
1400	25	65	85	130	195	320	535	965
1450	20	50	70	105	155	255	430	770
1500	15	45	55	85	130	215	355	645

The above ratings are all subject to the stipulations made on page appendix 13-1 and the following:

(1) For notes applicable to material groups, see page appendix 13-2
(2) Ratings are maximum allowable non-shock working pressures at the temperature shown for the applicable material. For intermediate temperatures linear interpolation is permitted.
(3) Applies only to buttwelding end valves manufactured to ANSI B16.34.
(4) For welding end valves Only. Flanged end volve ratings terminate ot 1000°F.

Pressure-Temperature Ratings for Flanges, Flanged Fittings and Flanged and Buttwelding End Valves

Pipe Flanges and Flanged Fittings ANSI Standard B16.5
Flanged and Buttwelding End Valves ANSI Standard B16.34

Ratings for Materials Group 2.6: A240-309S, A312-TP309, A351-CH8, A351-CH20, A358-309 (1)

Pipe Flanges and Flanges Fittings
Standard Class Valves—Flanged and Buttwelding End

Temperature, °F	Working Pressure by Classes, psig (2)							
	150	300	400	600	900	1500	2500	4500 (3)
−20 to 100	260	670	895	1345	2015	3360	5600	10080
200	230	605	805	1210	1815	3025	5040	9070
300	220	570	760	1140	1705	2845	4740	8530
400	200	535	710	1065	1600	2665	4440	7990
500	170	505	670	1010	1510	2520	4200	7560
600	140	48C	635	955	1435	2390	3980	7165
650	125	465	620	930	1395	2330	3880	6985
700	110	455	610	910	1370	2280	3800	6840
750	95	445	595	895	1340	2230	3720	6695
800	80	435	580	870	1305	2170	3620	6515
850	65	425	565	850	1275	2125	3540	6370
900	50	415	555	830	1245	2075	3460	6230
950	35	385	515	775	1160	1930	3220	5795
1000	20	335	450	670	1010	1680	2800	5040
1050	20(4)	290	390	585	875	1460	2430	4370
1100	20(4)	225	300	445	670	1115	I860	3345
1150	20(4)	170	230	345	515	860	1430	2570
1200	20(4)	130	175	260	390	650	1085	1955
1250	20(4)	100	135	200	300	495	830	1490
1300	20(4)	80	105	160	235	395	660	1185
1350	20(4)	60	80	115	175	290	485	875
1400	20(4)	45	60	90	135	225	370	670
1450	10(4)	30	40	60	95	155	260	465
1500	10(4)	25	30	50	70	120	200	360

Special Class Buttwelding End Valves Only

Temperature. °F	Working Pressure by Classes, psig (2)							
	150	300	400	600	900	1500	2500	4500
−20 to 100	265	695	925	1390	2085	3470	5785	10415
200	245	640	850	1280	1915	3195	5320	9580
300	235	610	810	1220	1825	3045	5070	9130
400	225	590	785	1175	1760	2935	4895	8810
500	215	560	750	1125	1685	2810	4680	8420
600	205	535	710	1065	1600	2665	4445	7995
650	200	520	695	1040	1560	2600	4330	7795
700	195	505	675	1010	1520	2530	4215	7585
750	190	500	665	995	1495	2490	4150	7475
800	185	485	645	970	1455	2420	4035	7265
850	180	475	635	950	1425	2370	3950	7110
900	180	465	620	925	1390	2315	3860	6945
950	175	450	600	900	1350	2250	3750	6750
1000	160	420	560	840	1260	2100	3500	6300
1050	140	365	485	730	1095	1820	3035	5465
1100	105	280	370	560	835	1395	2320	4180
1150	85	215	285	430	645	1070	1785	3215
1200	60	165	215	325	490	815	1355	2445
1250	50	125	165	250	375	620	1035	1865
1300	40	100	130	200	295	495	820	1480
1350	30	75	100	145	220	365	610	1095
1400	20	55	75	no	170	280	465	835
1450	15	40	50	75	115	195	320	580
1500	10	30	40	60	90	150	250	450

The above ratings are all subject to the stipulations made on page appendix 13-1 and the following:

(1) For notes applicable to material groups, see page appendix 13-2
(2) Ratings are maximum allowable non-shock working pressures at the temperature shown for the applicable material. For intermediate temperatures linear interpolation is permitted.
(3) Applies only to buttwelding end valves manufactured to ANSI B16.34.
(4) For welding end valves Only. Flanged end volve ratings terminate ot 1000°F.

Pressure-Temperature Ratings for Flanges, Flanged Fittings and Flanged and Buttwelding End Valves

Pipe Flanges and Flanged Fittings ANSI Standard B16.5
Flanged and Buttwelding End Valves ANSI Standard B16.34

Ratings for Materials Group 2.7: A182-F310, A240-310S, A312-TP310, A351-CK20, A358-310, A479-310S (1)

Pipe Flanges and Flanged Fittings
Standard Class Valves—Flanged and Buttwelding End

Temperature, °F	Working Pressure by Classes, psig (2)							
	150	300	400	600	900	1500	2500	4500 (3)
−20 to 100	260	670	895	1345	2015	3360	5600	10080
200	230	605	805	1210	1815	3025	5040	9070
300	220	570	760	1140	1705	2845	4740	8530
400	200	535	710	1065	1600	2665	4440	7990
500	170	505	670	1010	1510	2520	4200	7560
600	140	480	635	955	1435	2390	3980	7165
650	125	465	620	930	1395	2330	3880	6985
700	110	455	610	910	1370	2280	3800	6840
750	95	44p	595	895	1340	2230	3720	6695
800	80	435	580	870	1305	2170	3620	6515
850	65	425	565	850	1275	2125	3540	6370
900	50	415	555	830	1245	2075	3460	6230
950	35	385	515	775	1160	1930	3220	5795
1000	20	350	465	700	1050	1750	2915	5245
1050	20(4)	335	445	665	1000	1665	2770	4990
1100	20(4)	290	390	585	875	1460	2430	4370
1150	20(4)	245	330	495	740	1235	2060	3705
1200	20(4)	205	275	410	620	1030	1715	3085
1250	20(4)	160	215	325	485	805	1345	2420
1300	20(4)	120	160	240	360	600	1000	1800
1350	20(4)	80	105	160	235	395	660	1185
1400	20(4)	55	75	110	165	275	460	825
1450	15(4)	40	50	75	115	190	315	565
1500	10(4)	25	30	50	70	120	200	360

Special Class Buttwelding End Valves Only

Temperature. °F	Working Pressure by Classes, psig (2)							
	150	300	400	600	900	1500	2500	4500
−20 to 100	265	695	925	1390	2085	3470	5785	10415
200	245	645	850	1280	1915	3195	5320	9580
300	235	610	810	1220	1825	3045	5070	9130
400	225	590	785	1175	1760	2935	4895	8810
500	215	560	750	1125	1685	2810	4680	8420
600	205	535	710	1065	1600	2665	4445	7995
650	200	520	695	1040	1560	2600	4330	7795
700	195	505	675	1010	1520	2530	4215	7585
750	190	500	665	995	1495	2490	4150	7475
800	185	485	645	970	1455	2420	4035	7265
850	180	475	635	950	1425	2370	3950	7110
900	180	465	620	925	1390	2315	3860	6945
950	175	455	605	905	1360	2265	3775	6790
1000	160	420	560	840	1260	2105	3505	6310
1050	160	415	555	830	1250	2080	3465	6235
1100	140	365	485	730	1095	1820	3035	5465
1150	120	310	410	620	925	1545	2570	4630
1200	100	260	345	515	770	1285	2145	3860
1250	80	200	270	405	605	1010	1680	3020
1300	60	150	200	300	450	750	1250	2250
1350	40	100	130	200	295	495	820	1480
1400	25	70	90	140	205	345	570	1030
1450	20	50	65	95	140	235	395	710
1500	10	30	40	60	90	150	250	450

The above ratings are all subject to the stipulations made on page appendix 13-1 and the following:

(1) For notes applicable to material groups, see page appendix 13-2
(2) Ratings are maximum allowable non-shock working pressures at the temperature shown for the applicable material. For intermediate temperatures linear interpolation is permitted.
(3) Applies only to buttwelding end valves manufactured to ANSI B16.34.
(4) For welding end valves Only. Flanged end volve ratings terminate ot 1000°F.

Appendix 14

THERMAL EXPANSION RATE - FROM AMBIENT (70°F) TO TEMPERATURE, (IN./100 FT) (1 IN./100 FT = 0.833 MM/M)

Temperature (°F)

MATL	-325	-200	-100	70	200	300	400	500	600	700	800	900	1000	1100	1200	1300	1400	1500
CS	-2.37	-1.71	-1.15	0.00	0.99	1.82	2.70	3.62	4.60	5.63	6.70	7.81	8.89	10.04	****	****	****	****
HS	-2.37	-1.71	-1.15	0.00	0.99	1.82	2.70	3.62	4.60	5.63	6.70	7.81	8.89	10.04	11.10	****	****	****
CM	-2.37	-1.71	-1.15	0.00	0.99	1.82	2.70	3.62	4.60	5.63	6.70	7.81	8.89	10.04	11.10	****	****	****
LC	-2.37	-1.71	-1.15	0.00	0.99	1.82	2.70	3.62	4.60	5.63	6.70	7.81	8.89	10.04	11.10	12.22	13.34	****
IC	-2.22	-1.62	-1.08	0.00	0.94	1.71	2.50	3.35	4.24	5.14	6.10	7.07	8.06	9.05	10.00	11.06	12.05	****
HC	-2.04	-1.46	0.98	0.00	0.86	1.56	2.30	3.08	3.90	4.73	5.60	6.49	7.40	8.31	9.20	****	****	****
SS	-3.85	-2.73	-1.75	0.00	1.46	2.61	3.80	5.01	6.12	7.50	8.80	10.12	11.48	12.84	14.20	15.56	16.92	18.47
3T	-3.61	-2.56	-1.64	0.00	1.37	2.45	3.53	4.61	5.69	6.77	7.85	9.05	10.25	11.45	12.77	14.09	15.29	16.49
MO	2.62	-2.02	-1.39	0.00	1.22	2.21	3.25	4.33	5.46	6.64	7.85	9.12	10.42	11.77	13.15	****	****	****
NS	-2.25	-1.76	-1.17	0.00	1.01	1.84	2.69	3.58	4.50	5.46	6.43	7.43	8.41	****	****	****	****	****
AL	4.68	-3.44	-2.27	0.00	2.00	3.67	5.39	7.17	****	****	****	****	****	****	****	****	****	****
CI	****	****	****	0.00	0.90	1.64	2.42	3.24	4.11	5.03	5.98	****	****	****	****	****	****	****
BZ	-3.98	-2.78	-1.81	0.00	1.56	2.79	4.05	5.33	6.64	7.95	****	****	****	****	****	****	****	****
BS	-3.88	-2.70	-1.76	0.00	1.52	2.76	4.05	5.40	6.80	8.26	****	****	****	****	****	****	****	****
CN	-3.15	-2.19	-1.53	0.00	1.33	2.40	3.52	****	****	****	****	****	****	****	****	****	****	****
NC	-3.25	-2.30	-1.48	0.00	1.23	2.30	3.48	4.59	5.72	6.88	8.06	9.26	10.49	11.74	13.02	14.39	15.80	17.25

Note: **** means data not available. (Check the code book for the most updated values.)

MATL:

CS, low carbon steel	HS, high carbon steel	CM, carbon-moly steel	LC, low chrome steel
IC, intermediate chrome	HC, high chrome steel	SS, austentic stainless steel	3T, 310 SS steel
MO, monel	NS, 3.5% nickel steel	AL, aluminum	CI, cast iron
BZ, bronze	BS, brass	CN, copper nickel	NC, nickel iron chrome

Index

Note: Page numbers followed by *b* indicate boxes, *f* indicate figures and *t* indicate tables.

A

Absolute viscosity
  definition, 352
  in metric system, 352
Acceleration effects, fluid pressure changes, 347
Acceptable pulse level calculation, 778–779
Acoustic filters
  double-acting piston pump, 787, 787*f*
  duplex double-acting pump, 787
  excitation frequencies, 786
  pump type and operating speed, 787
  quintuplex plunger pump, 788, 788*f*
  single-acting piston pump, 787, 787*f*
Acoustic wave transmission
  bulk modulus, 789
  capacitance, 790
  dimensions, 805*f*
  dynamics analogies, 790
  effective bulk modulus, 789
  in elastic medium, 788–789
  filter, 794, 795*b*
  friction factors, 802*f*
  inductance, 791–793
  K-factor, 803–804*f*
  pressure drop considerations, 794–804
  resistance, 793–794
  in solids, 788–789
  velocity, 789–790, 791–792*f*
Allowable stress
  ASME B31.3, 59*t*, 68*t*
  ASME B31.4, 75*t*, 109*f*, 986–988*f*
  definition, 44–45
  for metallic materials, 178–181, 179*t*, 185*t*, 187*t*
  and stress limits, 132
  values, 132–133
Alternative leak test, 104
American Gas Association (AGA) equations, 434, 438*b*
  application, 418*b*
  gas flow, 415–421
  partially turbulent flow regime, 419*f*
American National Standards Institute (ANSI), 18
American Petroleum Institute (API), 159
  for fittings, 30, 31*t*
  gravity, 350, 353, 354*f*
  NPSs, 74*t*, 78*t*
  schedules, 74*t*, 78*t*
  steel pipe dimensions, 74*t*, 78*t*
  for valves, 30, 31*t*, 224–225, 1005*f*
  weight classes, 74*t*, 78*t*
American Society of Mechanical Engineers. *See* ASME (American Society of Mechanical Engineers)
American standard pipe thread dimensions, 194, 194*f*
American Standards Association (ASA), 18–22
Analog analysis, 775
Anchor blocks, 656
  earth movement, 656
  induced vibration, 657–658
  thermal expansion, 656, 657–658*f*
  thrust block anchors, 658*f*
Angle globe valves, 250, 251*f*, 263
Annular-mist flow, 427–429
API Standard 618
  Equation 1, 779
  Equation 2, 779
API Standard 2510, 605
ASA. *See* American Standards Association (ASA)
ASME (American Society of Mechanical Engineers), 18, 159, 639–640, 640*f*
  and BPVC, 24–25, 25*t*, 26*f*, 992*f*
  designer, 31–32
  mill under tolerance, 60, 61*t*, 72*t*
  owner, 30–31
  pipe schedule, 486*t*
  plastic pipe considerations, 28–30
  responsibility, 30–32
  standards, 225
  twentieth-century benefit, 21*f*
  for valves and fittings, 30, 31*t*
ASME B16, for valves and fittings, 1005*f*
ASME B16.5, 277–292, 279*t*
ASME B31 code
  allowable stress, 178–181, 179*t*, 185*t*, 187*t*
  ferrous metal piping, 162–170
  high-temperature service, 181
  impact test requirements, 181–190, 183*f*
  insulating materials, 176–177
  material selection, 162
  nonferrous metal piping, 170
  organization, 23–24, 23*t*, 26*f*
  pipe diameter, 160, 160*f*
  pipe wall thickness, 161–162
  plastic pipe, 171–176
  rules for, 177
  scope of, 18–22, 22*t*, 24–25
  size and length, 159–160
  temperature service, 181
ASME B31.1 power piping, 32–33
  branch connections, 34–38, 36*f*
  design pressure, 33–34
  expansion and flexibility, 38–39
  miters, 38
  pressure testing, 39–40
ASME B31.3 process piping
  allowable stress, 44–45, 59*t*, 67, 68*t*, 489*t*
  alternative leak test, 887
  analyzing vibrating pipe, 55, 56*f*
  and ASME B31.8, 500, 510–511*f*
  branch connections, 87–89, 88–89*f*, 97–100
  Chemical Plant and Petroleum Refinery Piping, 21
  circumferential principal stress, 42–43
  closures, 90–91, 91*t*
  component parts, 85–89
  design conditions, 50–52
  design criteria, 53
  diameter and thickness, 76*t*
  elbows and bends, 85, 86*f*
  fittings, 90
  flanges, 91–92
  flexibility analysis, 100–101
  fluid services, 46–47
  goal of, 41
  and hoop stress equation, 489–490
  hot tapping, 719
  hydropneumatic test, 887
  hydrostatic test, 886–887
  joints, 93–97, 96*f*
  listed rated components, 85
  listed unrated components, 85
  sensitive leak test, 888
  straight pipe, 60–77
  stress categories, 43–44
  unlisted components, 85
  vibrating pipe, 54–55
  wall thickness, 77–79, 80–83*f*, 485–490
  water hammer, 55–57
  weld quality factor, 67, 71*t*
ASME B31.4 pipeline transportation systems for liquids
  allowable stresses in tension, 75*t*
  branch connections, 108–120
  design conditions, 106–126, 107*f*
  design pressure, 24, 108, 109*f*, 111*f*
  design temperature, 108
  hydrocarbons and other liquids, 104–106, 105*f*
  minimum cover for buried pipelines, 126–127, 126*t*

ASME B31.4 pipeline transportation systems for liquids (*Continued*)
nondestructive examination, 893–895
pressure testing, 530, 888–889
straight pipe under external pressure, 108
ASME B31.6 chemical plant piping, 21
ASME B31.8 gas transmission and distribution piping systems
ASME B31.3 and, 500, 510–511*f*
branch connections, 139
buildings intended for human occupancy, 135–138
design, installation, and testing, 135, 137*t*
design pressure, 139, 140–142*t*
expansion and flexibility, 143–144, 143*t*
fittings, 139
and hoop stress equation, 500
at hoop stresses, 150–152, 152*t*
hot tapping, 719
leak testing, 152–153
location class and design factor, 496–499
location classes, 136–138
longitudinal stress, 144–147
maximum allowable working pressure, 500–501, 503*t*
mile section, 136
minimum cover for buried pipelines, 148–149, 149*t*
minimum yield strength, 508*t*
nondestructive examination, 895
offshore gas transmission pipelines, 153–158
periodic/cyclic loading, 148
pressure testing, 150–152, 151*t*, 530, 889–891
purpose of, 134–135
reactions, 144
reinforcement of multiple openings, 139–143
testing after construction, 149–150
unrestrained piping, 147
wall thickness, 490–501
ASME B31.10 cryogenic piping, 21–22
Austenitic stainless steels, 168
Automatic well test (AWT)
flanged connections, 660–661
header, manifolds, 537, 538*f*

B

Babcock equation, 423–424
Back pressure
balanced PRVs, 584–587
built-up, 583–584
conventional PRVs, 584, 587
correction factor, 585*f*
definition, 583
pilot-operated PRVs, 587
superimposed, 583–584
Back-welding, 712
Balanced PRVs, 554–555*f*, 560–562
back pressure effects, 584–587
capacity correction factor, 586*f*
gas/vapor, sizing for, 598
superimposed back pressure, 584
Balanced spring-loaded valves, 563, 584–587
Ball valves, 263
floating ball, 248, 248*f*
full port, 247
operating considerations, 247
orbit ball valve, 248, 249*f*
reduced port, 247
rotary ball valve, 246*f*
trunnion-mounted configuration, 248, 249*f*
usage, 246–247
Bellows-type expansion joint, 92, 92–94*t*, 201, 202*f*, 772, 773*f*
Bending shoe riser installation method, 870, 872*f*
Bends, 85, 86*f*
Bent spacing, pipe rack, 653–655
Bernoulli's equation, 377–378
Blind flanges, 212*f*, 215
Block diagram, 301, 302*f*
Blocked discharge, pressure relief devices, 550
Block pattern pipe fittings, 90, 90*f*
Block valves, 238–239
control loop, 688
discharge line, reciprocating compressor, 699
fired heaters, 687
PRV installation, 615
shell-and-tube exchangers, 681–682
suction lines, reciprocating compressors, 697
Blowdown valve
fired heaters, 686
reciprocating compressor discharge line, 699
Body of valves, 231
Boiler and Pressure Vessel Code (BPVC), 24–25, 25*t*, 26*f*, 993*f*
Boiler external piping (BEP), 32
Bolted bonnet, 57
Bolted quick couplings, 199
Bolts for flanges, 219–220, 220*f*
Bonnet, 229–231
BPVC. *See* Boiler and Pressure Vessel Code (BPVC)
Bracing, 712
Branch connections
API RP 14E, 208, 209*f*
ASME B31.3, 209
definitions, 112
integrally reinforced extruded outlet headers, 109
mechanical strength, 208
miters, 120
notation, 113
pipeline transportation systems, 139
power piping, 34–38, 36*f*
process piping, 87–89, 88–89*f*, 97–100
properties, 121–126
reinforced extruded outlets, 112*f*
reinforcement of multiple openings, 120
reinforcement of single openings, 116, 118*f*
tees and crosses, 109
types, 208
welded branch connections, 114, 115–117*f*, 117*t*
Brass, 272
Bridge-supported flares, 626, 629*f*
Bronze, 272
Bubble flow, 428
dispersed, 426
Buckling pin valve, 582*f*
Built-up back pressure, 583–584
Buoyancy, 1035*f*, 1039*f*
Buried pipelines, minimum cover for, 126–127, 126*t*
Burn pits, 634
Butterfly valves, 263
classifications, 251–253
conventional, 251–253, 252*f*
types, 251
Butt-welded pipe, 167–168, 168*f*, 198*f*
advantages, 197
applications, 197
disadvantages, 197–199
end connection, 266
ratings of, 199, 199*f*
Bypass valves, 676, 678*f*
control loop, 688
discharge piping, 705
shell-and-tube exchangers, 681–682
steam turbines, 695

C

Cable trays, 656
Calcium silicate, 176
Caps, 209, 210*f*
Carbon steel pipe, 1043*f*
vs. alloys, 165*t*
applications, 162
cost of grades, 164*t*
grades of, 163–164, 163*t*
international codes and specifications, 19*t*, 166*t*
manufacturing processes, 165–168
stress-strain diagram for, 164*f*
Cast iron, 272
applications, 169
manufacturing process, 169, 170*f*
Cathodic protection systems, 822
Cavitation, 377
Cellular glass, 177
Cement joint, 202
Centrifugal casting, 169, 170*f*
Centrifugal compressors
discharge piping, 691–692
guidelines, 689–690
horizontal split case, 691, 692*f*
lube and seal piping, 693
nozzle stress, 691
side case piping, 690, 690*f*
suction piping, 691–692
top case piping, 690, 691*f*
vertical split casing, 691, 692*f*

Centrifugal pumps, 702–704
discharge piping configurations, 704–705
suction piping, 704
Chain operators of valves, 233–234, 234*f*
Check valves, 254–257, 263, 538
discharge piping, 705
facility piping, 672
fired heater, 687
reciprocating compressor discharge line, 699
Chlorinated polyvinyl chloride (CPVC), 173–174, 173*t*
Chokes
diaphragm operator on, 538
facility piping, 668
manifolds, 537
Churn flow, 429
Cleaning pigs, 931
crude oil pipelines, 905–906
foam pigs, 935
mandrel pigs, 932–935
natural gas pipelines, 906
product pipelines, 906
solid-cast pigs, 936–938
spheres, 939
Closures
bar stock plug, 210, 210*f*
caps, 209, 210*f*
flat closures, 210
process piping, 90–91, 91*t*
Coal tar epoxy systems, 822
Coating systems, 822
CO_2 content, in transport fluid, 355–357
Codes, 17, 17, 18*t*. *See also* ASME (American Society of Mechanical Engineers)
organization, 23–24, 23*t*, 26*f*
for piping systems design and construction, 1009*f*
specs change, 25–28
Coefficient of thermal expansion, 121
Cold spring
application, 746–749
definition, 746, 746*f*
factor graph, 748*f*
Combined stress, 157
Commissioning
baseline survey, 904
considerations, 903
crude oil pipelines, 904
natural gas pipelines, 903–904, 903*f*
product pipelines, 903
water pipelines, 903
Compression sleeve couplings, 200
Concentric reducer, 206
Conceptual design phase, pipeline projects, 816
Concrete weight, 1028*f*, 1034*f*, 1039*f*
Connecting process. *See* Fittings
Construction materials
body materials, 272–273
choice of, 271
evaluating corrosion resistance, 271
procedure for selection, 271
Continuous weld pipe, 167–168
Control stations, 671–672
Control valve loops, 688*f*
block and bypass, 688
controlling sensing points, 689
serviceability, 689
support, 689
vent valves, 688
Conventional butterfly valves, 251–253, 252*f*
Conventional PRVs
back pressure effects, 584, 587
gas/vapor, sizing for, 595–598
Conventional spring-loaded PRVs
for blowdown control, 553*f*
for gas/vapor service applications, 551–558
for liquid service applications, 559–560
opening pressure of, 561*f*
schematic of, 552*f*
set pressure of, 561*f*
with threaded connections, 556*f*
Corrosion
control practices, 530–531
inhibition, 962–963
monitoring, 965–968
protection of pigging, 368
Corrosion-resistant alloy, 29*t*
Couplings, 200
Critical flow
rate, 592–593
sizing for, 593–595
Crude oil, 348
high-wax-content, 360*t*
low-wax-content, 360*t*
properties, 355*t*
transmission pipelines, 814
Cyclic loading, 148

D

Darcy-Weisbach equation, 378
incompressible method, 398–400
pressure drop, 379
Data sheets
drawing list, 319, 321*f*
instrument data sheet, 315–319, 318*f*
manpower estimate, 319, 321*f*
task schedule, 319, 320*f*
Dead load, 731–733
Density
fluid, 349–352
gas, 351
liquid, 349–350
Derrick-supported flares, 625–626, 628*f*
Derrick-supported stacks, 625
Designer
piping standards, 31–32
process piping, 49–50
Design temperature
minimum temperature, 52
pipeline transportation systems, 108
process piping, 51–52, 52*t*
Detailed design phase, pipeline projects
coating selection, 818
corrosion and material selection, 818
environmental impact and risk assessment, 817–818
mechanical pipeline design, 818
route selection and survey, 817
Diaphragm check, 257
Diaphragm operators, 236, 236*f*
Digital analysis, 775
Discharge piping
centrifugal compressors, 691–692
centrifugal pumps, 704–705
PRV installation, 611–612
reciprocating compressors, 698–699, 698*f*
reciprocating pumps, 705–706
Disk, 226
Diverter valves, 257, 258–259*f*
Double-acting piston pump, 787, 787*f*
Double block-and-bleed (DBB) valves, 257–258
Double pipe heat exchangers, 683, 683–684*f*
Double submerged arc weld (DSAW), 167
Drain lines, 701
Drain piping, 670*f*, 671
Drain valves
reciprocating compressors, 697
reciprocating pump, 706
Dresser coupling, 200, 201*f*
Dual-diameter pigs, 942
Ductile iron, 170
Dukler liquid holdup fraction, 436*f*
Duplex double-acting pump, 787
Dynamically balanced plug valves, 245–246

E

Earth movement, anchor blocks, 656
East Kalimantan pipeline consortium project
commissioning and operation, 884
construction, 883–884
hydraulic analysis, 882–883
Eccentric reducer, 206
suction piping, 704
Elbolet®, 207, 207*f*
Elbows
failure, 43, 44*f*
45° LR elbow, 204
90° LR elbow, 203
process piping, 85, 86*f*
reducing, 204
return bends, 204–205
90° SR elbow, 204
types of, 203, 204*f*
Electrical conduit, 646
Electrical insulation kits, 672
Electrical one-line drawings, 315, 317*f*
Electric operators of valves, 237
Electric resistance welded (ERW) pipe, 43–44, 165–167
Elevation head, 372
fluid pressure changes, 347
pressure changes effects, 383–386, 383*f*

Emulsions, 368
End connections of valves, 225
Engineering drawings
  data sheets, 315–319
  flow diagrams, 301
  flow plan arrangement, 334–340
  symbols, 319–334, 323–324*f*
Engine jacket cooling waterlines, 700
Equivalent length
  head loss in valves, 458–459
  pipe fittings, 458–459
Erector
  piping standards, 32
  process piping, 50
Erosional velocity, 471–474
  gas line sizing, 479–480
  two-phase flow line sizing, 481–483
Erosion, from solid particle impingement, 473–474
Excess weight method, 714–715, 714*b*, 714*t*
Exhaust lines
  expansion joints, 702
  flexible pipe and muffler support, 701–702
Expansion piping, 766
  anchor force considerations, 770–772
  exhaust line joints, 702, 703*f*
  joint selection, 92, 92–94*t*, 201, 202*f*, 772–773
  loop design, 531, 532*f*, 767–769, 767–768*f*, 768*b*
  pipeline transportation systems, 121–126, 143–144
  power piping, 38–39
  values for constant C, 770*t*
  values for constant K, 771*t*
Extruded polystyrene, 177
ExxonMobil Equation, 778–779

F

Fabrication
  drawings, 314
  piping standards, 32
  process piping, 50
  of surge bottle, 783–784
  testing of, 127–129, 127*t*
Facility piping
  bill of materials, 13*t*
  check valves, 672
  chokes, 668
  compressor station, 344
  control stations, 671–672
  design considerations, 6
  electrical insulation kits, 672
  flange protectors, 668–670, 669*f*
  flow line, 343
  open-ended valves, 672
  physical properties, 349–357
  production facility, 344
  pumping station, 344
  separator station, 344
  tracing, 668
  transmission line, 345
  transportation of fluids type, 348
  trunk line, 343
  types and functions, 4–6
  typical design project, 7–13, 7–11*f*
  vessel drains, 670–671, 670*f*
Fanning friction factors, 379–382
Feasibility study phase, pipeline projects, 816
Ferrous metal piping, 76*t*, 377
  carbon steel, 162–168
  cast iron, 169
  ductile iron, 170
  stainless steel, 168–169
Fiberglass pipe, 28–30, 30*t*, 176–177
Fiberglass-RTRP, 175
Fin-fan coolers, 684–685, 686*f*
Fired heaters
  block valves, 687
  blowdown valve, 686
  check valve, 687
  components, 686–688
  fluid stream piping for, 687*f*
  multiple burner, 687–688
  thermal relief valve, 687
Fire protection, storage tanks, 710
Fire sizing
  API Standard 521, 605–610
  API Standard 2510, 605
  calculation method, 604–605
  environmental factors, 606*f*
  National Fire Protection Agency 58, 605
  pressure relief valve, 550
Firewater systems, 710
Fittings
  expansion joints, 201
  flanges, 210–220
  flexible piping, 202
  hot tapping, 208
  hypothetical, 1001*f*
  pipeline transportation systems, 139
  process piping, 90, 90*f*
  quick connections, 199
  reducer, 205–206
  socket-welded connections, 195–197
  specifications, 1000*f*
  tees, 205
  temporary line closures, 222–224
  threaded connections, 193–195
  threaded fittings, 220–222
  welding outlets, 206–208
Flame arrestors, 623–624
Flame distortion, by lateral wind, 633, 633*f*
Flange end connection, 266
Flange gaskets
  characteristics, 217*t*
  flat gasket, 217–218
  insulating gaskets, 219, 219*f*
  metal-clad gaskets, 218
  ring type joint gaskets, 219
  solid metal gaskets, 218
  tongue-and-groove gaskets, 218–219
Flange protectors
  facility piping, 668–670, 669*f*
  types of, 669*f*
Flanges
  characterization, 211–213
  facings and finishes, 213
  flat face, 213
  lap joints, 212*f*, 213–214
  piping connection with, 211
  process piping, 91–92
  raised face, 211*f*, 213
  ring joint, 213
  specification, 210–211, 215–217, 215*f*
  standard flanges, 212*f*, 213–214
  types, 211, 211*f*
Flanigan liquid holdup fraction, 438*f*
Flare booms, 625, 627*f*
Flare stacks, 624
  burn pits, 634
  design criteria, 627–634
  elevated design, 624–625, 624*f*
  flare-tip diameter, 627–629, 631*f*
  height, 632
  offshore flare-support structures, 625–627, 626*f*
  purge gas, 634
  velocity determination, 630
  vent design, 634–635
Flare-tip diameter, 627–629, 631*f*
Flashback protection, 621–624
Flat closures, 210
Flat face facing, 213
Flat gasket, 217–218
Flexibility, 202
  pipeline transportation systems, 121–126, 143–144
  power piping, 38–39
  process piping, 100–101
Floating ball configuration, 248, 248*f*
Flow coefficients
  head loss in valves, 456–458
  pipe fittings, 456–458
Flow diagrams
  block diagram, 301, 302*f*
  electrical one-line drawings, 315, 317*f*
  layout/equipment arrangement drawings, 308–309
  piping and instrument diagrams, 304–308, 305*f*
  piping drawings, 309–314, 311*f*
  piping fabrication drawings, 314
  process flow diagram, 302–304, 303*f*
  production skid layout, 310*f*
  structural drawings, 315, 316*f*
  utility flow diagram, 308
Flowline, 4
Flow line anchoring
  facility piping and pipeline systems, 343
  nonmetallic, 535*f*
  piping design, 531, 535*f*
Flow plan arrangement, 334–340
Flow potential, 362
Flow regimes, 362
  single-phase flow, 370
  two-phase flow, 370, 426–429

Fluid
character, 3
conveying, 3
services, 46–47, 48*f*
Fluid flow
design, 345–347
distance for pipelines, 346
line size determination, 346
pressure loss, 346
principles, 347
Fluid head, 371–372
Fluidic seals, 623
Fluid velocity
line size determination, 346
manifold, 539
Foam pigs, 932
cleaning pigs, 935
sealing pigs, 941
studded, 909
Foam protection systems, 710
Foam synthetic rubber, 177
Forward-acting rupture disks
composite, 574–575, 576*f*
scored, 574, 575*f*
solid metal, 570*f*, 574
Foundation integrity, calculations, 665–666
Frictional effects, fluid pressure changes, 347
Friction losses, 372–377, 1048*f*
Fritzsche's equation, 423
Fuel lines, reciprocating compressors, 699–700
Fuel volume bottle, 700
Full-bore through conduit gate valves, 241, 242*f*
Full port ball valves, 247
Funnel drains, 647, 648*f*, 699*f*
Furnace weld pipe, 167–168
Fusion bonded epoxy (FBE) coatings, 822

G

Gas
blowby, pressure relief devices, 550
density, 351
dispersion, limitations, 632
plants, spacing in, 643*f*
properties of, 594*t*
Reynolds number for, 364–366
sizing for, 592–598
Gas engines, 693*f*
pressure regulator, 693
relief valve, 694
starter valve, 693
Gas flow
AGA equation, 415–421
elevation corrections, 421
empirical equations, 398–400
gas equation graphs, 423
general equation, 395–398
isothermal equation, 393–394
Oliphant equation, 398, 423
Panhandle "B" equation, 422
Panhandle equation, 404–414
Spitzglass equation, 414–415, 422
Weymouth equation, 400–404, 403*f*, 422
Gas line sizing, 477–480
determination, 515–516*b*
erosional velocity, 479–480
pressure drop, 477–478, 478*f*
velocity, 478–480
Gas transmission and distribution piping systems (ASME B31.8)
branch connections, 139
buildings intended for human occupancy, 135–138
design, installation, and testing, 135, 137*t*
design pressure, 139, 140–142*t*
expansion and flexibility, 143–144, 143*t*
fittings, 139
at hoop stresses, 150–152, 152*t*
leak testing, 152–153
location classes, 136–138
longitudinal stress, 144–147
mile section, 136
minimum cover for buried pipelines, 148–149, 149*t*
offshore gas transmission pipelines, 153–158
periodic/cyclic loading, 148
pressure test requirements, 150–152, 151*t*
purpose of, 134–135
reactions, 144
reinforcement of multiple openings, 139–143
testing after construction, 149–150
unrestrained piping, 147
Gas viscosity, 355
Gas well manifolds, 661, 661*f*
Gate valves, 262
components, 240*f*
designs, 240–241, 240*f*
full-bore through conduit gate valves, 241, 242*f*
parallel gate valves, 241
plug disk gate valves, 242, 244*f*
wedge gate valves, 241–242, 243*f*
Gathering pipeline systems, 5, 345, 813
Gauging pigs, 942
Gear operators of valves, 235, 235*f*, 238*t*
Globack lap joint flanges, 215*f*, 216
Globe valves, 249–250, 262
angle pattern, 250, 251*f*
standard pattern, 250, 250*f*
GPSA method, 780–782
Graphite rupture disks, 574, 577, 579*f*
parameters, 579, 580*f*
pin-actuated devices, 580
selection, 577–579
specification, 577–579
Grayloc connectors, 266–267, 267*f*
Ground lip unions, 712
Guy wire-supported stacks, 625

H

Hand calculations, 775
Handwheels, 233, 234*f*
Hazen-Williams equation
"*C*" factor, 388–390, 390*t*
glycol/amine piping, 542
graphic solution, 389*f*
liquid flow, 387–388
liquid hydrocarbon piping, 542
water piping, 542
Headers
block valve, 538
manifolds, 537
relief, 656
vent lines, 701
Head loss in valves
equivalent length, 458–459
flow coefficients, 456–458
resistance coefficients, 448–455
Heat absorption equation, 608
Heaters distribution manifolds, 662, 663–664*f*
High differential pigs, 946–947
High-performance butterfly valve, 253
Hoop stress, 485, 488*f*, 834, 834*f*
ASME B31.3 and, 489–490
ASME B31.8 and, 500
design against yielding, 156
at minimum specified yield strength, 150–152, 152*t*
Hot tapping, 208
branch connection, 718–719
calculation, 720–721*b*
cutting mechanism, 717*f*
machine, 717, 717*f*
STOPPLE plugging machine, 718*f*
H_2S, content in transport fluid, 355–357
Hydrocarbon
gas viscosity, 356–357*f*
physical constants of, 1060*f*
Hydropneumatic test, 103
Hydrostatic testing
on internal pressure piping, 130–131
power piping, 39–40
pressures, 293*t*
process piping, 102–103
of stubs, 722–724, 722*b*
Hyperbaric spheres, 946
Hypothetical piping, specification, 1002*f*

I

Incorporation by reference, 17
Injection line, 345
Injection system, 6
Inlet block valves, 538
Inlet piping, PRV installation, 610
In-line closures, 222–224, 223*f*, 224*t*
In-line inspection (ILI) tools. *See* Intelligent pigs
Instrument data sheet, 315–319, 318*f*

Instrument symbols, 325–332, 333–334*f*
Insulating gaskets, 219, 219*f*
Insulating materials
  calcium silicate, 176
  cellular glass, 177
  extruded polystyrene, 177
  fiberglass, 176–177
  foam synthetic rubber, 177
  mineral wool, 176
Integral flanges, 212*f*, 214
Intelligent pigs, 906–907, 931
  bend detector pigs, 953–954
  considerations, 947
  leak detector pigs, 952–953
  mapping pigs, 954–955
  metal loss pigs, 948
  pipeline operations, 970
  product-sampling pig, 956
  video recording pigs, 955–956
Interconnecting piping, 5, 345
Internal pressure stress, 734–735
International codes and specifications for steel pipe, 19*t*
International Standardization Organization (ISO), 159
Isometric drawings, 8–13, 12*f*, 314
Isothermal equation, gas flow, 393–394

J

Jacketing, 668
Joints
  bellows-type expansion joint, 92, 92–94*t*, 201, 202*f*, 772, 773*f*
  cement, 202
  lead, 202
  mechanical, 202
  process piping, 93–97, 96*f*
  roll-on, 202

K

Kinematic viscosity
  centistokes, 352
  definition, 352
  vs. temperature, 354*f*
Knockout drums, 620–621

L

Ladders, vessel pipe, 678–679
Landfall construction methods
  cofferdam-offshore pull, 876
  cofferdam-onshore pull, 874–876
  HDD-offshore pull, 879
  HDD-onshore pull, 878
  tunnel and shaft method, 879
Lantern ring, 231, 231*f*
Lap joint facing, 213–214
Lap joint flange, 212*f*, 214
Latent heat, 608
Lateral wind, flame distortion by, 633, 633*f*
Latrolet®, 207, 207*f*
Lay barges construction, 862–864
Lead joint, 202
Leak testing, 131
Lift check, 256, 256*f*
Light petroleum products, 359*f*
Line drafting, 369
Line packing, 369
Liquid accumulation, pigging, 368
Liquid-discharge considerations, PRV installation, 618–619
Liquid flow
  applicability, 390–393
  "C" factors, 388–390
  effects of viscosity, 386–387
  general equations, 386–387
  Hazen-Williams equation, 387–388
Liquid hydrocarbons, 348
Liquid inlet piping requirements, 675, 678*f*
Liquid line sizing, 474–477
  determination, 510*b*, 513*b*
  pressure drop, 475
  velocity, 475–477
Liquids
  density, 349–350
  relief, sizing for, 599–604
  Reynolds number for, 363–364
  viscosity, 356*f*
  volume fraction, 425
Live load, 731
Locking devices, 275, 276*f*
Longitudinal stress
  calculation of, 145–146
  design against yielding, 156–157
  design for greater than yield, 147
  restraint condition, 144–146
  in unrestrained pipe, 147
Longitudinal submerged arc welding, 829
Long weld neck flanges, 215–216, 215*f*
Lube oil lines, 700
Lube piping, 693
Lubricated plug valve, 244–245, 245*f*
Lug-type butterfly valve, 251, 252*f*

M

Machine-induced pressure waves, 775–776
Machinery of piping
  centrifugal compressors, 689–693
  production operations, 689
Magnetic cleaning pigs, 943
Maintenance and repair program, pipeline pigging
  batch inhibition, 907
  considerations, 907
  hyperbaric spheres, 908
  over-inflated spheres, 908
  plugging pigs, 908
  pre-inspection cleaning, 907
Malleable iron, 272
Mandrel pigs, 931
  cleaning pigs, 932–935
  sealing pigs, 939–941
Manholes, 677
Manifolds, 4, 343–344, 536
  automatic well test header, 537, 538*f*
  branch connection schedule, 540*t*
  check valves, 538
  chokes, 537
  clamp-type connections, 659
  components, 537–539
  design, 539–541
  diaphragm operator on choke, 538
  elements of, 537, 537*f*
  fabrication, 541–542
  flanged connections, 659
  gas well, 661, 661*f*
  header block valves, 538
  headers, 537
  inlet block valves, 538
  oil well, 661–662, 662*f*
  valve, 660*f*
Manual operators, of valves, 233, 233*f*
Manufacturer
  piping standards, 32
  process piping, 50
Manufacturers Standardization Society (MSS)
  for fittings, 1005*f*
  for valves, 225, 1005*f*
Martensitic stainless steels, 168
Material properties, 981*f*
Maximum allowable incidental pressure (MAIP), 834
Maximum allowable joint efficiencies, 994*f*
Maximum allowable operating pressure (MAOP), 823–824, 830–834
Maximum allowable working pressure (MAWP), 277–292, 279*t*, 549
  from API RP 14E, 996–997*f*
  ASME B31.3, 490, 491*t*
  ASME B31.8, 500–501, 503*t*
  from GPSA Engineering Data Book, 998–999*f*
Maximum test pressure, stubs, 722
Mechanical equipment symbols, 325, 329*f*
Mechanical flow diagram. *See* Piping and instrumentation diagrams (P&IDs)
Mechanical induced vibration, 774–775
Mechanical joint, 202
Metal-clad gaskets, 218
Metallic rupture disks, 572–573, 573*f*
Mill tolerance, 60, 61*t*, 72*t*
Mineral wool, 176
Miters
  bend, 86–87, 87*f*
  pipeline transportation systems, 120
  power piping, 38
Moduli of elasticity, 121
Molecular seals, disposal-system design, 622–623

Moody friction factors, 394
pressure drop, 380–382
Weymouth equation, 400
Multiple burner heaters, 687–688
Multiple-device installation
fire contingencies, 590, 590–591*t*
operating contingencies, 589

N

National Fire Protection Agency 58, 605
National Fire Protection Association (NFPA), 709–710
Natural gas
processed, 348
specific gravity, 351
unprocessed, 348
Natural gas liquids (NGLs), 3, 348
Natural gas transmission pipelines, 814
Networks, 370–371
Nipple joins fittings, 221
Nodular iron, 272
Nominal pipe sizes (NPSs), 74*t*, 78*t*, 989–991*f*
Nonboiler external piping (NBEP), 32
Nondestructive examination
ASME B31.3 requirements, 893
ASME B31.4 requirements, 893–895
ASME B31.8 requirements, 895
in-process examination, 892
liquid-penetrant examination, 892
magnetic particle examination, 892–893
radiographic examination, 892
ultrasonic examination, 892
visual examination, 891
Nonferrous alloy pipe, standards for, 29*t*
Nonferrous metal piping, 170
Nonlubricated plug valves, 245
Nonmetallic piping, requirements for, 104
Nonrising stem, 228, 230*f*
Nozzles, 677, 691

O

Oblique valves, 262
Offshore gas transmission pipelines
combined stress, 157
design against yielding, 155–157, 155*t*
design conditions, 153–154
hoop stress, 156
installation design considerations, 154
longitudinal stress, 156–157
operational design considerations, 154
strength considerations, 154–155
testing, 157–158
Offshore liquid pipeline systems
allowable stresses and limits, 132
allowable stress values, 132–133
conditions, 132
design against buckling, 133
design against fatigue, 133
design against fracture, 133
design against loss of in-place stability, 133–134
flexible pipe, 134
impact, 133
paragraph designations, 131
requirements, 132
residual stresses, 134
Offshore pipeline construction, 860–881
backfilling, 880–881
design considerations, 861–862
landfall considerations, 874–879
lay barges, 862–864
pipeline protection, 879–880
reeling, 865–867
subsea tie-ins, 873–874
tie-in/riser installation, 868–873
towing, 867–868
Offsite piping, storage tanks, 710
Oil well manifolds, 661–662, 662*f*
Olets®, 206–207
Oliphant equation
gas flow, 398, 423
graphic solution, 399*f*
Onshore pipeline construction, 836–860
backfilling/cleaning up, 856–859
construction considerations, 859–860
lowering in, 855
pipeline coating, 850–855
pipe stringing and bending, 841–842
right-of-way clearing/preparation, 837–839
testing, 856–859
topsoil stripping, 839
trenching and rock blasting, 839–843
welding/setup and inspecting, 843–850
Open drains, 646–647
Open-ended valves, 672
Orbit ball valve, 248, 249*f*
Orifice flanges, 215*f*, 217
Overhead piping
elevation change, 647*f*
support bent, 648*f*
Overpressure
causes of, 551
protection, 51
Owner
piping standards, 30–31
process piping, 49
Owner's authorized inspector
piping standards, 32
process piping, 50

P

Packing, 231–233, 232*f*
Packing box, vent lines, 701
Panhandle "A" equation, 398, 404–407
application, 405*b*
graphic solution, 406*f*
Panhandle "B" equation, 398, 407–414, 422
application, 409*b*
Paraffin wax, 360
Parallel gate valves, 241
Periodic loading, 148
Petroleum Refinery Piping Code (ASA B31.3), 18–21
PFD. *See* Process flow diagram (PFD)
Phase behavior, 358
Pigging, 368, 531
acoustic monitoring, 960
acoustic transponders, 959
auxiliary equipment, 368–369
barred tee's, 915–917
base materials, 912
bundles, 920
check valves, 918
chemical cleaning, 909
cleaning, 368
cleaning stage, 900, 905–906
commissioning, 903–904
concentric reducers, 911
condensate removal, 905
eccentric reducers, 911
epoxy-based coatings, 912
field bends, 913–914
forged bends, 913
fundamental concepts, 897
gauging, 900–901, 901*f*
gel pigs, 908
geometry/caliper pig, 901
government regulations, 898
hot tar coating, 912
hydrostatic testing, 901–902
ILI tools and services, 947–956
in-line block valves, 917–918
intelligent pigs, 906–907, 931
intrusive pig signalers, 957
length, 910–911
linings, 912
liquid accumulation, 368
magnet pig tracking, 959
maintenance and repair program, 907–908
miter bends, 914
monitoring, 368
nonintrusive pig signalers, 957–958
pig tracking, 956–957, 959
pig traps and stations, 920–931
pressure monitoring, 960
radioisotopes, 959
relative position, 919
safeguard assets, 897–898
in situ coating, 908–909
studded foam pigs, 909
transmitters, 958–959
unbarred tees, 914–915
utility pigs, 906, 931–947
Pig launching and receiving
considerations, 926–927
handling area, 927

Pig launching and receiving (*Continued*)
lifting equipment, 928
two-pin method, 927
Pig traps and stations
closures, 923–924
configuration, 920–921
drain points, 925
injection point connection, 926
instrumentation connections, 926
intrusive and nonintrusive signalers, 925
kicker and bypass lines, 924–925
launcher barrel length, 921–922
launching and receiving, 926–928
space saving measures, 928
valve bypass connection, 926
vents/blowdown points, 925
Pilot-operated PRVs, 562–568
back pressure effects, 587
gas/vapor, sizing for, 595–598
lift of disk *vs.* vessel pressure, 568–569*f*
low-pressure, 566*f*
main valve, 562–563
modulation, 564*f*, 565–566
with nonflowing modulating pilot valve, 565*f*
pop-action, 563–564*f*
superimposed back pressure, 584
Pilot-operated PSV, installation, 613*f*
Pin-actuated devices, 580
Pin-wheel pigs, 944–945
Pipe dynamics
machine-induced pressure waves, 775–776
mechanical induced vibration, 774–775
motion reduction, 774
natural frequency, 774–775
vibration analyzer, 775
Pipe fittings
equivalent length, 458–459
flow coefficients, 456–458
resistance coefficients, 448–455
Pipeline class location regulation, 983–985*f*
Pipeline cleaning, 962
Pipeline codes and standards, 825
Pipeline commissioning
gas pipelines, 961
liquid pipelines, 961
phase, 819
Pipeline construction phase, 818–819, 836
offshore pipeline construction, 860–881
onshore pipeline construction, 836–860
Pipeline emergencies and repairs, 973–976
Pipeline integrity assessment, 964–973
Pipeline leak detection, 971–973
Pipeline mechanical design
American standards, 825
British standard BS 8010, 825
Canadian standard CSA Z662, 825
construction loads, 827
Dutch standard NEN 3650, 825
European Union EN14161, 825
expansion stress, 827
external damages, 828
external pressure, 826–827
Pipeline operations
commissioning, 961
corrosion inhibition, 962–963
corrosion monitoring, 965–968
emergency procedures, 973
inspection, 964–965
intelligent pigs, 970
leak detection, 971–973
liquid removal, 963
major pipeline repairs, 975–976
operating and maintenance procedures, 962
permanent pipeline repair, 975
pipeline cleaning, 962
temporary repair, 974
ultrasonic pig, 970–971
utility pigs, 969
Pipeline profile, 425
Pipeline repairs
major, 975–976
permanent, 975
temporary, 974
Pipeline systems
advantages, 814
case study, 882–884
corrosion protection and coatings, 821–822
distance for, 346
environmental considerations, 821
gathering pipelines, 813
material selection, 820
mechanical design, 823–835
in North America, relative safety records, 814
pipeline projects, 815–819
pipe selection and wall thickness, 819–820
regulatory permits, 821
route selection and survey, 820–821
testing, 882
transmission pipelines, 814
Pipeline transportation systems for liquids (ASME B31.4)
branch connections, 108–120
design conditions, 106–126, 107*f*
design pressure, 24, 108, 109*f*, 111*f*
design temperature, 108
hydrocarbons and other liquids, 104–106, 105*f*
minimum cover for buried pipelines, 126–127, 126*t*
straight pipe under external pressure, 108
Piping
arrangement, 539
concrete anchor block for, 534*f*
design procedure, 639–641
design properties, 1011*f*
elevation change, 646–647*f*
expansion loops, 531, 532*f*
facility areas, 653
field-fabricated trap, 533*f*
flow line anchoring, 531, 535*f*
hypothetical, 1001*f*
information required for, 528–529
interference, 645–652
joints, 202
layout, 645
line sizing considerations, 529
machinery (*see* Machinery of piping)
manifolds, 536–542
materials, 712–716
schedule, 989–991*f*
spaces, 648–649
specifications, 1000*f*
stress, 731
supports, 652–656, 654–655*f*, 655*t*, 674
unit weight, 991*f*
wall thickness, 990*f*
width and bent spacing, 653–655
Piping and instrumentation diagrams (P&IDs), 7–8, 304–308, 305*f*
Piping flexibility calculation form, 739*f*, 741*f*
Piping schedule, 65–77, 66*t*
Piping spools, 697, 704
Piping systems
in parallel, 371, 371*f*
in series, 371, 371*f*
Piston check, 256, 257*f*
Piston operators, of valves, 236–237, 237*f*
Plant piping systems
gas piping, 542
glycol/amine piping, 542
liquid hydrocarbon piping, 542
water piping, 542
Plastic pipe, 712–713
chlorinated polyvinyl chloride, 173–174
polyethylene, 174
polypropylene, 174
polyvinyl chloride, 171–172
reinforced thermosetting resin pipe, 175–176, 175*t*
standards for, 28–30, 30*t*
Plate-and-frame exchangers, 684, 685*f*
Plate flanges, 215*f*, 216
Platforms, vessel pipe, 678–679
Plot plan, piping system, 641–645, 642*f*
Plug disk gate valves, 242, 244*f*
Plug flow, 426
Plug valves, 263
design, 242–244, 244*f*
dynamically balanced plug valves, 245–246
lubricated plug valve, 244–245, 245*f*
nonlubricated plug valves, 245
patterns, 246
Pneumatic testing, 40, 103
Poisson's ratio, 121

Polyethylene (PE), 174
Polypropylene (PP), 174
Polyvinyl chloride (PVC)
  application, 171
  dimension ratios, 172*t*
  manufacturing processes, 172
  pipe schedules, 982*f*
  temperature derating factors, 171*t*
Port, 226
Power operators, of valves, 235
Power piping (ASME B31.1), 32–33
  branch connections, 34–38, 36*f*
  design pressure, 33–34
  expansion and flexibility, 38–39
  miters, 38
  pressure testing, 39–40
PP. *See* Polypropylene (PP)
PRD. *See* Pressure relief devices (PRD)
Pressure breaks
  API RP 14J guidelines, 524
  piping and instrument diagram, 525
  procedure, 525–528
  rules, 524–525
Pressure-bypass pigs, 943–944
Pressure design
  of components, 59–60
  pipeline transportation systems, 24, 108, 109*f*, 111*f*
  power piping, 33–34
  process piping, 50
  of straight pipe, 33–34, 60–77
Pressure drop
  calculation procedure, 383
  Darcy-Weisbach equation, 379
  effects of elevation changes, 383–386, 383*f*
  Fanning equation, 379–380
  flare stacks, 630–631
  flow rate equations, 386–448
  gas lines, 410*b*, 412*b*, 477–478, 478*f*
  line size determination, 346
  liquid lines, 390*b*, 392*b*, 475
  manifold, 539, 541*f*
  Moody and Fanning friction factors, 380–382
  two-phase flow line sizing, 480
Pressure Equipment Directive (PED), 47
Pressure head, 372
Pressure loss, two-phase, 429
Pressure ratings
  for API flanges, 522, 523*t*
  API SPEC 6A/ISO 10423, 292, 294*t*
  API *vs.* ASME flanges, 292
  ASME B16.5, 277–292
  ASME 150 class, 281*t*
  ASME 300 class, 283*t*
  ASME 400 class, 285*t*
  ASME 600 class, 287*t*
  ASME 900 class, 287*t*
  ASME 1500 class, 289*t*
  ASME 2500 class, 291*t*
  goal of standards, 276–277
  hydrostatic test pressures, 293*t*
  manifold, 539
  for Material Group 1.1, 523*t*
  maximum allowable working pressure, 277–292, 279*t*
  wall thickness, 522
Pressure regulator, 693
Pressure relief devices (PRD), 593
  API effective area, 582–583
  back pressure, 583–587
  blocked discharge, 550
  designing/modifying, 549
  determination of relief requirements, 581
  determining individual relief loads, 551
  rupture disk devices, 568–579
  sizing, 549–550
Pressure relief valve (PRV), 551
  balanced, 560–562, 561*f*
  balanced-bellows, 554–555*f*
  conventional spring-loaded, 551–560, 552*f*, 556*f*
  installation of, 610–619
  lift of disk *vs.* vessel pressure, 558*f*
  operation-liquid service, 559*f*
  operation-vapor/gas service, 557, 557*f*
  orifice designations, 619, 620*f*
  pilot-operated, 562–568, 563–566*f*, 568*f*
  pressure-level relationship for, 567*f*
  reciprocating pump, 705
  rupture disk devices with, 572*f*
Pressure taps, 683
Pressure-temperature ratings, for flanges, 1072–1094*f*
Pressure testing, 39–40
  alternative leak test, 104
  ASME B31.3 requirements, 529–530, 886–888
  ASME B31.4 requirements, 530, 888–889
  ASME B31.8 requirements, 530, 889–891
  controls and protective equipment, 130
  elevation adjustments, 530
  of fabricated items, 127–129, 127*t*
  general requirements, 885–886
  hydropneumatic test, 103
  hydrostatic testing, 102–103, 130–131
  leak testing, 131
  nonmetallic piping, 104
  pneumatic test, 103
  requirements, 101–102
  systems/parts of systems, 130
  tie-ins, 130
Primary stress, 43, 44*f*
Process flow diagram (PFD), 302–304, 303*f*
  example, 9*f*
  of gas handling facility, 7
  P&ID based on, 7–8, 10*f*
  plot plan based on, 11*f*
Process piping (ASME B31.3)
  allowable stress, 44–45, 67, 68*t*
  analyzing vibrating pipe, 55, 56*f*
  branch connections, 87–89, 88–89*f*, 97–100
  circumferential principal stress, 42–43
  closures, 90–91, 91*t*
  component parts, 85–89
  design conditions, 50–52
  design criteria, 53
  diameter and thickness, 76*t*
  elbows and bends, 85, 86*f*
  fittings, 90
  flanges, 91–92
  flexibility analysis, 100–101
  fluid services, 46–47
  goal of, 41
  joints, 93–97, 96*f*
  listed rated components, 85
  listed unrated components, 85
  longitudinal weld joints, quality factors for, 76*t*
  miter bends, 86–87, 87*f*
  organization, 40–41
  piping schedule, 65–77, 66*t*
  plant piping design, 59–60
  pressure and temperature variations, 53–54
  pressure testing, 101–104
  principal axis and stress, 42
  quality factors, 57–58, 58*f*
  radial principal stress, 42
  responsibilities, 49–50
  scope, 47–49
  straight pipe, 60–77
  stress categories, 43–44
  unlisted components, 85
  vibrating pipe, 54–55
  wall thickness for external pressure, 77–79, 80–83*f*
  water hammer, 55–57
  weld quality factor, 67, 71*t*
Production facility, 5
  facility piping and pipeline systems, 344
  spacing guidelines for, 644*f*
Production header, 4–5
Product transmission pipelines, 814
PRV. *See* Pressure relief valve (PRV)
Pull-tube riser installation method, 870, 871*f*
Pulsation dampeners, 785, 785–786*f*
Pulse waves, 775–776, 776*f*
Pumping station, 5, 344
Purge gas, 634
Push-on gasket joint, 202
PVC. *See* Polyvinyl chloride (PVC)

Q

Quality factors, for weld joints, 57–58, 58*f*
Quick check method
  application, 755–761, 755*f*
  piping configuration, 757*f*
  for single plane configuration, 758*b*, 758*f*
  symbol definitions, 755*f*

Quick check method (*Continued*)
for three-plane configuration, 759*b*, 760*f*
U-shaped configuration, 763–766, 764–765*f*
Z-shaped configuration, 761–763, 762*f*
Quick connections, 199
Quintuplex plunger pump, 788, 788*f*

R

Radiation, flare stacks, 634
Raised face facing, 211*f*, 213
Rapid cycling, PRV installation, 614
Reactive force, PRV installation, 613
Reciprocating compressors, 776–777, 777*f*
auxiliary equipment, 696
cylinders, 696
discharge line, 698–699, 698*f*
engine jacket cooling waterlines, 700
expansion joint, 703*f*
flexible exhaust support, 702*f*
fuel lines, 699–700
lube oil lines, 700
suction lines, 696–697, 697*f*
vibration considerations, 695–696
Reciprocating pumps, 705, 706*f*
acoustic filters, 785–788
acoustic waves suppression, 784–785
discharge piping, 705–706
pulsation dampeners, 785, 785–786*f*
recycle system, 706–708
suction piping, 705
Recognized and Generally Accepted Good Engineering Practice (RAGAGEP), 17
Recycle system, reciprocating pumps, 706–708
Recycle valve, 707–708
Reduced port valve, 247
Reduced screwed flanges, 212*f*, 215
Reducing butt-welding tee, 205
Reducing slip-on flanges, 215–216*f*, 216
Reel barge construction, 865–867
Regular lap joint flanges, 215*f*, 216
Regular pattern plug valves, 246
Reinforced fabricated tee, 208
Reinforced thermosetting resin pipe (RTRP), 175–176, 175*t*
Relief headers, 656
Relief valve
factors for noninsulated vessels, 609*f*
gas engines, 694
PRV installation, 615–618
reciprocating compressor discharge line, 698
Relieving pressure, 588
fire contingencies, 589–591
operating contingencies, 588–589
Remote flares, 627, 629*f*
Resistance coefficients
application, 450*b*
head loss in valves, 448–455
pipe fittings, 448–455, 449*t*
representative, 451*f*
Resonant chatter, 615
Restrained pipe, longitudinal stress for, 146
Reverse-acting rupture disk, 575–576
with knife blades, 577*f*
scored, 578*f*
Reynolds (Re) number, 362
friction factor, 382*f*
for gases, 364–366
for liquids, 363–364
Ring flanges, 215*f*, 216
Ring joint facing, 213
Ring type joint gaskets, 219
Rising stem, 226–228, 228–229*f*
Rolled-on flanges, 215*f*, 216
Roll-on joint, 202
Rotary ball valve, 246*f*
Round-port full-area pattern plug valves, 246
Rupture disk devices, 574
categories, 572–574, 573*f*
fire applications, 569–571
forward-acting, 570*f*, 574–575
pressure-level relationships for, 571*f*
with PRV, 572*f*
reverse-acting, 575–576
single, 569–571

S

Sacrificial anode systems, 822
Safety device symbols, 260*t*, 294*t*, 332–334, 340*f*
Sand production, piping design, 532–536
SAW pipe. *See* Submerged arc welding (SAW) pipe
Scrapers. *See* Cleaning pigs
Scraper traps, 531
Screwed bonnet, 230
Screwed pipe flanges, 212*f*, 214
Screw end connection, 265
Seal drums, disposal-system design, 621–622, 623*f*
Seal piping, 231–233, 232*f*, 693
Seat, 226
Secondary stress, 43–44
Self-supported stacks, 625
Separation station, 5
Shell-and-tube exchangers
block and bypass valves, 681–682
maintenance, 683
pressure taps, 683
thermal relief, 683
thermal stress, 683
thermowells, 683
vibration stress, 683
Short pattern plug valves, 246
Shunting pigs, 945
Side case piping, 690, 690*f*
Single-acting piston pump, 787, 787*f*
Single-device installation
fire contingencies, 590, 591*t*
operating contingencies, 588
Slip-on flanges, 214–215, 215*f*
Slip-type expansion joint, 772–773, 773*f*
Slug flow, 427–428
Smart pigs, 906
SMLS pipe, 165
Socket-welded connections, 196*f*
advantages, 197
applications, 197
disadvantages, 197
end connection, 266
pressure class designations, 195
ratings of, 198*f*
Socket-welded fitting, 221, 222*f*
Socket-welded flanges, 215*f*, 216
Solid-cast pigs, 932
cleaning pigs, 936–938
sealing pigs, 941
Solid metal gaskets, 218
Sour fluid piping, 713
Southwest Research Institute (SwRI) study, 472–473
Spacing of pipe, 648–649
Special alloys, 272–273
Special-purpose valves
check valves, 254–257
diverter valves, 257, 258–259*f*
for special function, 253–254
Specialty flanges
globack lap joint flanges, 215*f*, 216
long weld neck flanges, 215–216, 215*f*
orifice flanges, 215*f*, 217
reducing slip-on flanges, 215–216*f*, 216
regular lap joint flanges, 215*f*, 216
ring/plate flanges, 215*f*, 216
rolled-on flanges, 215*f*, 216
socket-welded flanges, 215*f*, 216
Specific gravity
of gas, 351
of liquid, 350
natural gas, 351
of oil and water mixture, 351
oil field liquids, 350–351
weight coating, 714*t*, 715–716, 716*b*
Spheres, 932
cleaning pigs, 939
hyperbaric, 908
over-inflated, 908
sealing pigs, 941
Spiral submerged arc welding, 829
Spiral-welded pipe, 168
Spiral wound gasket, 218
Spitzglass equation, 414–415, 422
Split case
horizontal, 691, 692*f*
vertical, 691, 692*f*
Split disk wafer check, 255
Spool drawings, 314
Stainless steel pipe
applications, 169
austenitic stainless steels, 168

international codes and specifications, 19*t*
manufacturing processes, 169
martensitic stainless steels, 168
Stanchions, 649–650
Standard flanges
blind flanges, 212*f*, 215
integral flanges, 212*f*, 214
lap joint flanges, 212*f*, 214
reduced screwed flanges, 212*f*, 215
screwed pipe flanges, 212*f*, 214
slip-on flanges, 214–215, 215*f*
weld neck flanges, 212*f*, 214, 214*f*
Standard pattern globe valves, 250, 250*f*
Standards, 17, 17, 18*t*. *See also* ASME (American Society of Mechanical Engineers)
corrosion-resistant alloy, 29*t*
nonferrous alloy pipe, 29*t*
piping systems design and construction, 1009*f*
steel, 29*t*
valves and fittings, 1005*f*
Standard steel pipe flanges, 212*f*
Starter valve, 693
Start-up bypass, 706
Steady-state
conditions, pressure changes, 347
flow equation, 378
Steam equations
Babcock equation, 423–424
Fritzsche's equation, 423
Steam relief, sizing for, 598–599
Steam turbines, 694
bypass valve, 695
exhaust, 694, 695*f*
inlet, 694
piping metallurgy, 695
Steel pipe, 272
air flow through, 1068–1070*f*
construction, 137*t*, 140*t*
natural gas service, 496–497*t*
standards for, 29*t*
water flow through, 1064–1066*f*
yield strength for, 495*t*
Stem, 226–229
Stem extensions, 275
STOPPLE plugging machine, 718*f*
Storage tanks
API 650, 708–709
dike design, 710
fire protection, 710
foundations, 709
ladders, 709
offsite piping, 710
spacing, 709
stairs, 709
Straight butt-welding tee, 205
Straight pipe, pressure design, 60–77
Stratified smooth flow, 426–427
Stratified wavy flow, 426–427
Stress values, 121–126, 123*f*
Structural drawings, 315, 316*f*
Stub and kick plate, 698
Stubs, 722–724, 722*b*
Submerged arc welding (SAW) pipe, 167, 819–820, 829
Suction lines
block valve, 697
drain valve, 697
piping spools, 697
reciprocating compressors, 696–697, 697*f*
support riser, 697
Suction piping
centrifugal compressors, 691–692
centrifugal pumps, 704
reciprocating pumps, 705
Superimposed back pressure, 583
balanced PRVs, 584
on PRV opening, 584
Supplemental-device installation, 590–591
Surge bottle
acceptable pulse level calculation, 778–779
on compressor cylinder, 783*f*
design considerations, 777–778
fabrication, 783–784
mechanical strength, 782–783
nozzle breaks, 783–784
nozzle reinforcement, 784, 784*f*
nozzles sizing and location, 782
reciprocating compressor discharge line, 698
sizing, 779–784
Symbols
and abbreviations of piping, 319–325, 323–324*f*
for butt-welded systems, 326*f*
component indentification, 337*t*
instrumentation designation and, 325–332, 333–334*f*
mechanical equipment, 325, 329*f*
safety device symbols, 332–334, 335–337*t*, 340*f*
for screwed systems, 327*f*
for socket-welded systems, 328*f*

T

Tailpipe, PRV installation, 614
Tape coating systems, 822
Tee-head supports, 649–650
Tees
reducing butt-welding tee, 205
straight butt-welding tee, 205
types of, 205
Temperature
creep range, 45, 45*f*
fluid affect, 367
Temporary line closures
in-line closures, 222–224, 223*f*, 224*t*
for pipe ends and vessel openings, 224
Thermal expansion
anchor blocks, 656, 657–658*f*
pressure relief devices, 550
rate, 1095*f*
Thermal relief, 683, 687
Thermal stress, 735–736
carbon steel pipe expansion, 736*f*
layout modification, 744–745, 744*f*
piping arrangements, 737*f*
piping flexibility calculation form, 739*f*, 741*f*
range of, 738–743, 739*f*
shaped pipe section, 740*b*
Tube Turn Method®, 736–738
Thermowells, 683
Threaded fittings, 220–222, 221*f*
Threaded piping, 676
Throttling valves, 238–239
Thrust block anchors, 658*f*
Tie-in/riser installation
barefoot method, 870, 872*f*
bending shoe method, 870, 872*f*
elements, 868–869, 870*f*
flanging, 870
mechanical connectors, 870
pull-tube method, 870, 871*f*
welding, 869
Tilting disk check, 255–256, 255*f*
Tongue-and-groove gaskets, 213, 218–219
Top case piping, 690, 691*f*
Towed pipeline systems, 867–868
Tracing, facility piping, 668
Transmission line, 5–6
Transmission pipeline systems, 814
Trunkline, 4, 343
Trunnion-mounted configuration, 248, 249*f*
Tube Turn Method®, 736–738
Tubular Exchanger Manufacturers Association (TEMA) code, 679, 680–681*f*
Two-phase flow, 424
AGA equations, 434, 438*b*
annular-mist flow, 429
API RP 14E, 432–433, 446–447*b*
Beggs and Brill equation, 431–432
calculation procedure, 434–448
horizontal flow regimes, 426–428, 427–428*f*
line sizing, 480–483, 518*b*, 520*b*
liquid holdup, 426
liquid volume fraction, 425
pipeline profile, 425
pressure loss, 429
vertical flow regimes, 428–429, 429–430*f*
Two-phase fluids, 348
Two-phase liquids
holdup, 430
relief, 604
Two-phase vapor relief, 604

U

UFD. *See* Utility flow diagram
Ultrasonic pig, 970–971
Uninsulated components, 52
Union joins fittings, 222
Unreinforced fabricated tee, 208
Utility flow diagram (UFD), 308

Utility pigs, 906, 931
cleaning pigs, 932–939
considerations, 931–932
dual-diameter pigs, 942
gauging pigs, 942
high differential pigs, 946–947
hyperbaric spheres, 946
magnetic cleaning pigs, 943
pin-wheel pigs, 944–945
pipeline operations, 969
pressure-bypass pigs, 943–944
sealing pigs, 939–941
shunting pigs, 945

V

Valves
accessories, 275
angle globe valves, 263
API codes for, 30, 31*t*, 224–225, 1005*f*
API RP 6F, 274
API Specification 6D, 273
API standards, 224–225
ASME B16, 1005*f*
ASME standards, 30, 31*t*, 225
ball valves, 246–248, 263
basic mechanisms, 227*f*
body, 231
bonnet, 229–231
butterfly valves, 251–253, 263
chain operators, 233–234, 234*f*
chain operators of, 233–234, 234*f*
characteristics, 274–275
check valves, 263
classification, 226*t*
construction materials, 271–273
cost on selection, 275, 277*t*
design temperature, 274
diaphragm operators, 236, 236*f*
disk, seat, and port, 226
electric operators, 237
end connections, 225, 265–267
equivalent lengths, 267–268, 268*f*
fabrication, 273
for minimize backflow, 239
MSS standards, 225, 1005*f*
oblique valves, 262
on/off (block) valves, 238–239
operating convenience, 264
packing, 231–233, 232*f*
parts, 226–233
pipe materials roughness, 276*t*
piston operators, 236–237, 237*f*
plug valves, 242–246, 263
power operators, 235
pressure losses calculation, 269–270
pressure rating, 265
seals, 231–233, 232*f*
selection, 259–267, 260*t*
size, 265
special-purpose valves, 253–258
specification, 1000*f*
standards, 273–274
stem positions, 226, 264*f*
terminology, 225
throttling/regulating valves, 238–239
trim materials, 273
Vapor pressure, 355
Velocity
flare stacks design criteria, 630
gas line sizing, 478–480
limitations, 367
liquid line sizing, 475–477
two-phase flow line sizing, 481–483
Velocity head, 372
Vent lines
headers, 701
packing box, 701
Venturi pattern plug valves, 246
Vent valves, 706
Vessel drains, 670–671, 670*f*, 675–676
Vibrating pipe, 54–55
Victaulic coupling, 200, 200*f*
Viscosity, 352–355.
See also Kinematic viscosity
effects of, 386–387
gas, 355
hydrocarbon gas, 356–357*f*
liquid, 356*f*
in metric system, 352

W

Wafer check, 254–255
Wafer-type butterfly valve, 251, 252*f*
Wall thickness
ASME B31.3, 485–490, 510–511*f*
ASME B31.8, 490–501, 510–511*f*
ASME pipe schedules, 485
for external pressure, 77–79, 80–83*f*
of gas line, 515–516*b*
general hoop stress formula, 485, 488*f*
of liquid line, 510*b*, 513*b*
permanent blanks, 79–84, 84*b*
piping design practices, 528–542
pressure breaks, 523–528
pressure ratings, 522, 523*t*
standards and requirements, 484
two-phase line, 518*b*, 520*b*
Water
content in transport fluid, 355–357
fluid types, 348
liquid hydrocarbons and, 348
physical properties, 353*f*
properties of, 1063*f*
Water hammer, 55–57, 369
Wax appearance temperature (WAT), 360
Waxy crude, 359–362
behavior, 360
content, 360–361*t*
design and operational challenges, 361
management, 361
paraffins, 360
properties, 361
Wedge gate valves, 241–242, 243*f*
Weight coating, 713
cost, 716
excess weight method, 714–715, 714*b*, 714*t*
specific gravity method, 714*t*, 715–716, 716*b*
Weight stress
calculation, 732*f*, 732*b*
dead load, 731–733
definition, 731
live load, 731
Welded bonnet, 231
Welded branch connections, 114, 115–117*f*, 117*t*
Weld joint
quality factor, 57–58, 58*f*, 67, 71*t*
strength reduction factor, 58–59, 64*t*
Weld neck flanges, 212*f*, 214, 214*f*
Weldolet®, 207, 207*f*
Wellhead to sales concept, 1, 2*f*, 343, 344*f*
Wetted surface area, 607–608, 607*t*
Weymouth equation, 398
application, 402*b*
gas flow, 400–404, 403*f*, 422
gas piping, 542
graphic solution, 403*f*
for larger pipe, 400
Width spacing, pipe rack, 653–655

Y

Yield strength, for steel pipe, 495*t*